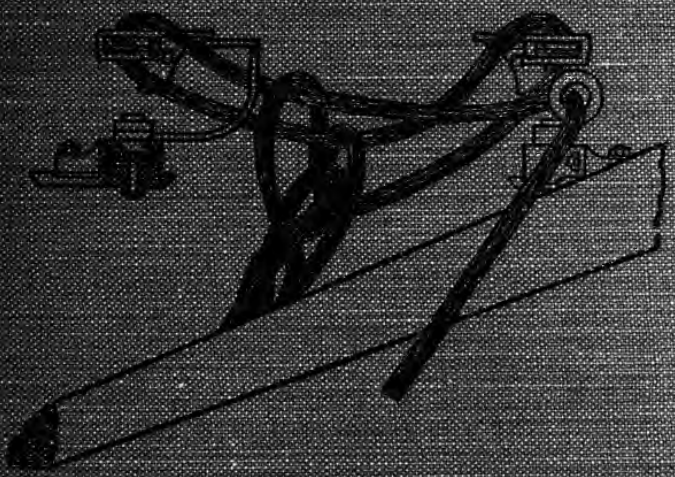

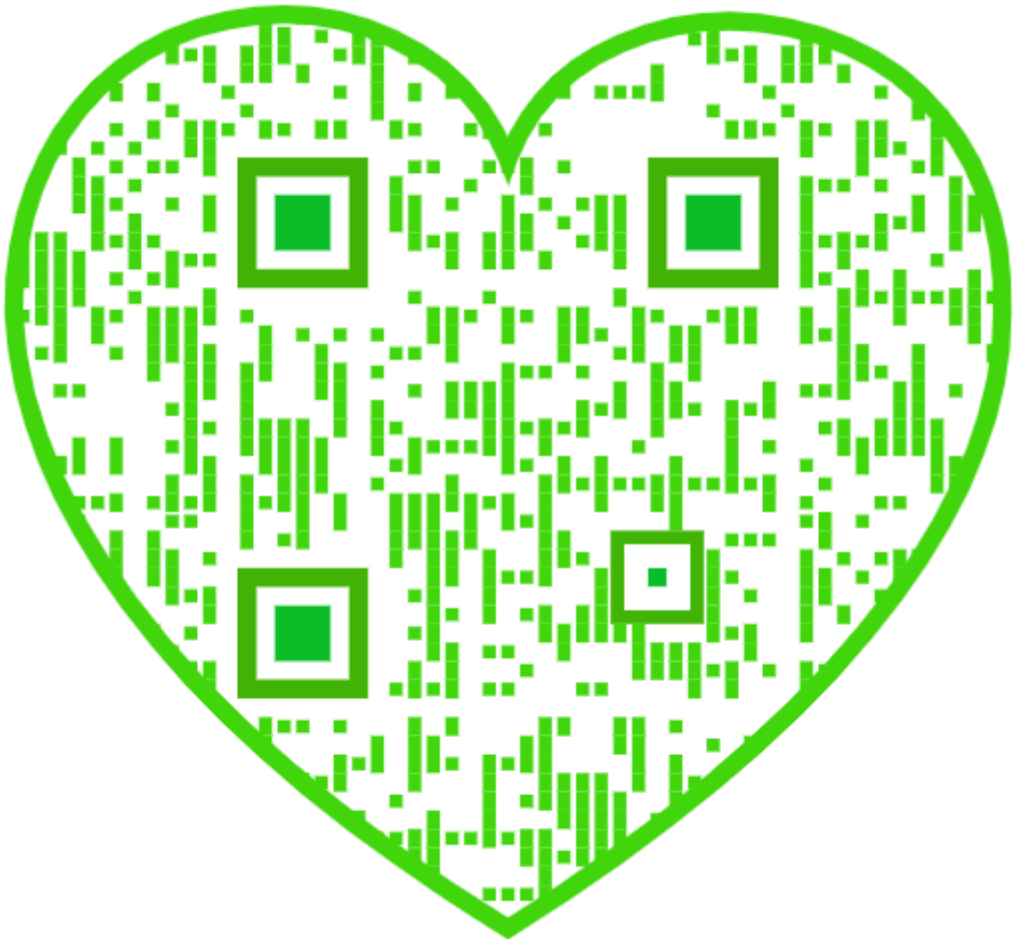

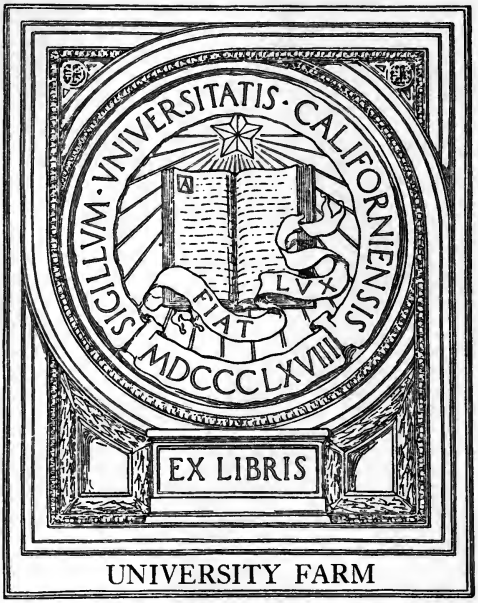

UNIVERSITY FARM

Digitized by the Internet Archive
in 2007 with funding from
Microsoft Corporation

http://www.archive.org/details/jutelinenweaving00woodrich

JUTE AND LINEN WEAVING

MACMILLAN AND CO., LIMITED
LONDON · BOMBAY · CALCUTTA
MELBOURNE

THE MACMILLAN COMPANY
NEW YORK · BOSTON · CHICAGO
DALLAS · SAN FRANCISCO

THE MACMILLAN CO. OF CANADA, LTD.
TORONTO

JUTE AND LINEN WEAVING

BY

THOMAS WOODHOUSE

DUNDEE TECHNICAL COLLEGE AND SCHOOL OF ART

AND

THOMAS MILNE

LAUDER TECHNICAL SCHOOL, DUNFERMLINE

UNIVERSITY OF CALIFORNIA
LIBRARY
BRANCH OF THE
COLLEGE OF AGRICULTURE

MACMILLAN AND CO., LIMITED
ST. MARTIN'S STREET, LONDON
1914

COPYRIGHT

First Edition 1904
Second Edition 1914

THIS WORK IS DEDICATED

TO THE MEMBERS

OF THE

DUNDEE CHAMBER OF COMMERCE

19231

PREFACE TO THE SECOND EDITION

PRACTICALLY all the original matter is reproduced in this edition; any small parts which have been omitted have been replaced by illustrations of more modern machinery. The additional matter embraces 108 new illustrations with the corresponding text; it includes the two distinct types of automatic weft supply mechanism, the chain linking machine, terry towel motions, warp stop motions, individual motor drives, improved types of box motions and jacquards. In nearly every chapter there has been inserted one or more new illustrations of modern weaving machinery.

We desire again to express our best thanks to all those who have been kind enough to assist us in this work, and to the publishers and printers for the excellent manner in which they have done their part.

T. WOODHOUSE.
T. MILNE.

September 1914.

PREFACE TO THE FIRST EDITION

During the last twenty years several important works on weaving have been presented to the public, but these have almost invariably been devoted to the various sides of the subject as applied in the structure and the production of woollen and cotton fabrics. It is true that these two fabrics are the most important of the whole group of textiles, and as such demand the greatest measure of attention from a literary as well as from a technical point of view. Teachers and students of these branches have therefore been fortunate in having within their reach a number of valuable works of reference bearing directly upon their particular branch of the textile industry. Those persons, however, engaged in the study and the manufacture of jute, linen, and of silk, have not been so fortunate in the above respect, and the scarcity of text-books bearing particularly upon the weaving of the two former fibres has induced us to compile the present work.

While the book is intended principally for those associated with the jute and the linen trades, we hope that several portions of it will be found useful for students in the other branches of weaving; indeed, it is practically impossible to compile a treatise on any branch of weaving which does not overlap, more or less, one or more of the other branches of the subject.

We do not claim that the work is complete in every respect; still we think that no important feature of the subject has been overlooked. Should, however, such omission be observed by any reader, we hope that we shall have our attention drawn to it. It has been our endeavour to put the matter in a readable form, and we hope to have contributed somewhat to the elucidation of the more abstruse problems of weaving by treating the principles underlying picking and beating up in a manner entirely different from the stereotyped form.

Should the present issue receive the favourable support of the weaving public, we hope to supplement it by a republication in book form of a series of articles, at present under course of publication in *The Textile Manufacturer*, upon the mathematical and the designing parts of the subject.

We trust our labours will enable present and future students to pursue their course of study under more pleasant conditions, and that this work may be the means of encouraging practical men to study more closely the theoretical side of their occupation.

We take this opportunity of thanking the publishers for their uniform kindness towards us, and also the various firms of machine makers and manufacturers to whom we have been indebted for particular information.

T. WOODHOUSE.
T. MILNE.

May 1904.

CONTENTS

CHAPTER I

PAGE

INTRODUCTORY 1, 2

CHAPTER II

COUNTS OF YARN 3–5

CHAPTER III

REELING, BUNDLING, AND SETTING . . . 6–9

Illustrations: No. 1. Porter Measure. Full size . 7

,, ,, 2. Elevation and Plan of "Glass." Full size 8

CHAPTER IV

WARP WINDING 10–28

Illustrations: No. 3. Elevation of Robertson and Orchar's Roll Winder . . 11

,, ,, 4. Plan of Robertson and Orchar's Roll Winder . . . 11

,, ,, 5. Side Elevation of Robertson and Orchar's Roll Winder . . 13

,, ,, 6. Plan of Robertson and Orchar's Roll Winder . . . 14

PAGE

Illustrations: No. 7. End Elevation of Camshaft Frame of ditto . . 15
,, ,, 8. Fraser's Automatic Stop Mechanism for Roll Winder . . 18
,, ,, 9. Side Elevation of Parker's Bobbin Winder . . . 21
,, ,, 10. End Elevation of Parker's Bobbin Winder . . 22
,, ,, 11. End and Part Sectional Elevation of Drum Winding Machine . 24
,, ,, 12. Side Elevation of ditto . . 25

CHAPTER V

WEFT WINDING 28–41

Illustrations: No. 13. Front Elevation of Anderston Foundry Pirn Winder . 31
,, ,, 14. End Elevation and Plan of ditto 33
,, ,, 15. Sectional Elevation of ditto . 35
,, ,, 16. Sectional Elevation and details of Parker's Cop Winder . 37
,, ,, 17. Detailed View of Eccentric Driving Arrangement for ditto 41

CHAPTER VI

WARPING, BEAMING, AND DRESSING . . . 42–109

Illustrations: No. 18. Elevation and Plan of Warping Mill 44
,, ,, 19. Detailed View of "Heck" for ditto 45
,, ,, 20. Three general views of Linking Machine . . . 51
,, ,, 21. Spool or Bobbin Bank of Linking Machine . . . 52
,, ,, 22. Leasing Apparatus of Linking Machine . . . 52
,, ,, 23. Measuring Machine of Linking Machine . . . 52
,, ,, 24. Linking Machine . . 52

PAGE

Illustrations: No. 25. End Elevation of Leasing Apparatus . . . 53
,, ,, 26. Details of ditto . . . 54
,, ,, 27. End Elevation of Measuring Machine 56
,, ,, 28. Marking Motion of ditto . 57
,, ,, 29. Elevation of Delivery Side of Linker. . . . 60
,, ,, 30. Plan of Linker . . . 60
,, ,, 31. End Elevation of Linker . 61
,, ,, 32. Linked Chain and details of ditto 64
,, ,, 33. Sectional Elevation of Chain Beaming Machine . . 66
,, ,, 34. Expanding Evener, Raddle or Wraith . . . 66
,, ,, 35. Details of Improved ditto . 68
,, ,, 36. Plan of Driving Arrangement for Chain Beaming Machine . 69
,, ,, 37. Plan and Elevation of Hibbert's Starch Mixing Apparatus . 76
,, ,, 38. End Elevation of Diluting Vat for ditto 78
,, ,, 39. Brass Tap for admitting Size and Arresting Foreign Matter 79
,, ,, 40. Special Mixing Tank . . 80
,, ,, 41. Starch Box with Automatic Feed 80
,, ,, 42. Plan and Elevation of Robertson and Orchar's Six-Cylinder Dressing Machine for Jute . 82
,, ,, 43. Elevation of Driving Arrangement for Starch Roller and Beam in ditto . . . 84
,, ,, 44. Plan of Driving Arrangement for Starch Roller and Beam in ditto 84
,, ,, 45. Sectional Plan of Frictional Driving Arrangement . 88
,, ,, 46. Measuring and Marking Motion 89
,, ,, 47. Section of Steel Drying Cylinder 92
,, ,, 48. Side Elevation of Robertson and Orchar's Warping Machine . 94

PAGE

Illustrations: No. 49. Front Elevation of ditto . . 95
,, ,, 50. Plan and Elevation of William Smith and Brothers' Dressing Machine for Linen . . 99
,, ,, 51. Elevation of Driving Side of ditto 101
,, ,, 52. Elevation of Centre of Machine 102
,, ,, 53. General View of a Dressing Room Fitted with Steam-heated Dressing Machines . . 104
,, ,, 54. Details of Hook Leasing Reed and Clasp Rods . . 105

CHAPTER VII

DRAWING-IN, REEDING, AND WEAVING . . 109–117

Illustrations: No. 55. View of Relative Positions of Yarn, Leaves, and Cloth . 110
,, ,, 56. Method of Indicating Drafting and Reeding . . . 111
,, ,, 57. View of Camb Leaf showing Heddles or Mails to be Cast Out 113
,, ,, 58. Diagram illustrating Relation between Shedding, Picking, and Beating Up in Looms with an Upward Beat . . 114
,, ,, 59. Ditto in Looms with a Downward Beat . . . 115

CHAPTER VIII

SHEDDING 117–142

Illustrations: No. 60. Diagram illustrating Movement of Warp in Bottom Closed Shedding . . . 118
,, ,, 61. Ditto in Centre Closed Shedding 118
,, ,, 62. ,, in Open Shedding . 120
,, ,, 63. ,, in Semi-open Shedding . 120
,, ,, 64. Path of Crank divided into three equal parts . . . 126

PAGE

Illustrations: No. 65. Diagram illustrating Irregular Motion given to Camb Leaves 127
,, ,, 66. Wyper (120° dwell) for Plain Cloth 128
,, ,, 67. Wyper (120° dwell) for Twill $\frac{2}{1}$ 131
,, ,, 68. Wyper (120° dwell) for Weave $\frac{2}{1}\frac{2}{3}$ 132
,, ,, 69. Wyper (190° dwell) for Plain Cloth 133
,, ,, 70. Wyper for Reducing Speed of Camb Leaves near Extreme Positions . . . 134
,, ,, 71. Elevation and section of Two Blades of a Plain Wyper . 135
,, ,, 72. Positive Tappet for Weave $\frac{2}{3}\frac{1}{2}\frac{2}{1}\frac{1}{3}$ 137
,, ,, 73. Different Sections for Woodcroft's Tappet . . . 138
,, ,, 74. Woodcroft's Open-shed Tappet . 138
,, ,, 75. Binding Plates for Woodcroft's Tappet . . . 139
,, ,, 76. Front Elevation of Camb Leaves and Connections to Positive Tappet . . . 140
,, ,, 77. End Elevation of ditto . . 141

CHAPTER IX

TAPPET DRIVING AND SETTING . . . 142–152

Illustrations: No. 78. Gearing for a Tappet Drive, 8 Picks or 4 Picks to the Round 143
,, ,, 79. Arrangement of parts for changing from Plain to Twill Weaves 145
,, ,, 80. Gearing for an Outside Tappet, 10 Picks or 5 Picks to the Round 147
,, ,, 81. Diagrams illustrating the Effect on Cloth by Altering 149
,, ,, 82. Position of Back and Front Rails . . . 150

PAGE

CHAPTER X

SUPPLEMENTARY SHEDDING MOTIONS . 152–163

Illustrations: No. 83. Elevation of Plain or Hessian Loom, showing Principal Parts 153
,, ,, 84. } Diagrams illustrating Move-
,, ,, 85. } ments of Roller Mountings for
,, ,, 86. } the 3-leaf Twill $\frac{2}{1}$ . . 154
,, ,, 87. }
,, ,, 88. }
,, ,, 89. } Ditto for 4-leaf Twill $\frac{3}{1}$. 155
,, ,, 90. }
,, ,, 91. }
,, ,, 92. } Ditto for 5-leaf Twill $\frac{4}{1}$. 156
,, ,, 93. }
,, ,, 94. "Climax" Spring-Top Motion . 159
,, ,, 95. Spring Under Motion . . 160
,, ,, 96. Modification of Kenyon's Spring Under Motion . . . 161
,, ,, 97. Double Eccentric and Spring Under Motion . . . 162
,, ,, 98. Single Eccentric and Spring Under Motion . . . 163

CHAPTER XI

DOBBY SHEDDING 163–204

Illustrations: No. 99. Side Elevation of Bottom Shedding Hand-loom Dobby . 165
,, ,, 100. Front Elevation of ditto . 166
,, ,, 101. Sectional Elevation of ditto . 166
,, ,, 102. Motion for rotating Dobby Cylinder in either direction . 168
,, ,, 103. Front Elevation of Hooks and Connections of Parker's Positive Centre Shedding Dobby 170
,, ,, 104. Side Elevation of ditto. . 170

PAGE

Illustrations: No. 105. Sectional Elevation of Hooks and Connections of Parker's Positive Shedding Dobby, showing driving arrangement 172

,, ,, 106. Diagram illustrating the Extreme Positions of Knives and Hooks . . . 173

,, ,, 107. Front Elevation of Parker's Dobby . . . 174

,, ,, 108. Three Sectional Views of Ward Brothers' or Keighley Dobby, showing the Working of the Main Parts 176

,, ,, 109. 177

,, ,, 110. 178

,, ,, 111. Lupton and Place's improvement in Double Levers for Keighley Dobby . . 179

,, ,, 112. Diagram illustrating Method of Pegging Lags . . 180

,, ,, 113. Front Elevation of Hattersley's Positive Open-shed Keighley Dobby . . . 182

,, ,, 114. Sectional Elevation of ditto . 183

,, ,, 115. Back Elevation of Positively-driven Cylinder . . 185

,, ,, 116. End Elevation of Positively-driven Cylinder . . 185

,, ,, 117. Sectional Front Elevation of Hollingworth and Knowles' Open-shed Dobby . . 188

,, ,, 118. Details of Vibrator Lever, Vibrator Wheel, and Connector of ditto . . 189

,, ,, 119. Levelling Bar and Grate of ditto 191

,, ,, 120. Improved Type of Levelling Bar of ditto . . . 192

,, ,, 121. Driving from Low Shaft in ditto 193

,, ,, 122. Sectional end Elevation of ditto, showing Driving . . 194

,, ,, 123. Method of Driving Chain Cylinder in ditto . . 195

,, ,, 124. Isometric View of Chain Cylinder in ditto . . 197

PAGE

Illustrations: No. 125. Ward Brothers' Cross-Border Dobby . . . 200
,, ,, 126. Lupton and Place's Climax ditto 203

CHAPTER XII

JACQUARDS: SHEDDING, MOUNTING, ETC. . . 204–315

Illustrations: No. 127. Sectional View of 400's Jacquard with Griffe in Lowest Position 206
,, ,, 128. Ditto with Griffe Partly Raised 207
,, ,, 129. Various types of Hooks and Needles . . . 209
,, ,, 130. End Elevation of 600's Single-lift Scotch Jacquard . . 210
,, ,, 131. Plan of ditto . . . 211
,, ,, 132. End Elevation of 400's Single-lift Jacquard . . 214
,, ,, 133. Continental Fine-pitch Jacquard 216
,, ,, 134. Sectional Elevation of 400's Double-lift, Single-Cylinder Jacquard . . . 219
,, ,, 135. Driving Arrangement for Double-lift, Single-Cylinder Jacquard . . . 221
,, ,, 136. Driving Arrangement for Double-lift, Double-Cylinder (Slide Motion) Jacquard . 224
,, ,, 137. Devoge's Reversing Motion for Card Cylinder . . 225
,, ,, 138. Devoge's Reversing Motion for Card Cylinder . . 226
,, ,, 139. } "Duck-bill" Reversing Motion
,, ,, 140. } for Card Cylinder, Needle
,, ,, 141. } Protector, and Driving Arrangement . . . 227
,, ,, 142. "Duck-bill" Reversion Motion 228
,, ,, 143. Sectional Elevation of Double-lift, Double-cylinder Jacquard, Griffes in Extreme Positions . . . 231

PAGE

Illustrations: No. 144. Sectional Elevation of Double-lift, Double-cylinder Jacquard, Griffes Level . . 233
,, ,, 145. Devoge's Stop Motion for Jacquards . . . 235
,, ,, 146. Front Elevation of 600's Single-lift Jacquard, Heck, etc. . 238
,, ,, 147. Framework of Devoge's Cross-border Jacquard . . 243
,, ,, 148. Davenport and Crossley's Cross-border Jacquard . . 245
,, ,, 149. Driving Arrangement for Cylinders of ditto . . 246
,, ,, 150. Alternate Arrangement for Cylinders of ditto . . 248
,, ,, 151. Hooks and Needles of Hutchison's Cross-border Jacquard . 250
,, ,, 152. Double Swan-neck, etc. of ditto 251
,, ,, 153. } Details of ditto . . { 253
,, ,, 154. } { 254
,, ,, 155. Cross-border Jacquard with both Cylinders at Same Side 255
,, ,, 156. Verdol Fine-pitch Jacquard . 259
,, ,, 157. Card Frame for One Set of Cards. . . . 262
,, ,, 158. Card Frame for Two Sets of Cards 265
,, ,, 159. Sectional View of Harness and Leaves in Pressure Harness . 267
,, ,, 160. Graphic Representation of Threads in Pressure Harness and Leaves . . . 269
,, ,, 161. Tappet for Imparting Motion to Griffe of Pressure Harness . 272
,, ,, 162. Front View of Leaves and Treadles for Pressure Harness 276
,, ,, 163. Sectional Elevation of Twilling Jacquard . . . 279
,, ,, 164. Plan of Twilling Jacquard . 283
,, ,, 165. Details of ditto . . . 285
,, ,, 166. Side Elevation of ditto . . 287

PAGE

Illustrations: No. 167. Parts for Controlling Movement of Cylinder in Twilling Jacquard . . . 290
,, ,, 168. Ground and Figure Sateen Weaves, Perfect Binding . 296
,, ,, 169. Ditto, Imperfect Binding . 296
,, ,, 170. Duncan's Card Reeling-back Motion . . . 300
,, ,, 171. Duncan's Card Reeling-back Motion . . . 301
,, ,, 172. View of Harness Reed, Comber Board, Harness Mounting and Support for Jacquard Machine with Connection to Crank-shaft for Driving Single-lift . 306
,, ,, 173. Details of Harness Mounting . 307

CHAPTER XIII

PICKING 315–355

Illustrations: No. 174. Elevation and Plan of Cone Over-pick, Beginning of Stroke 318
,, ,, 175. Elevation and Plan of Cone Over-pick, End of Stroke . 319
,, ,, 176. Picking Wyper in Parts . 323
,, ,, 177. Construction of Picking Wyper for Narrow Looms . . 330
,, ,, 178. Chord of Arc described by Picking Arm . . . 334
,, ,, 179. End Elevation of Hall's Lever Pick 338
,, ,, 180. Front Elevation of Hall's Lever Pick 339
,, ,, 181. Front Elevation of Hollingworth and Knowles' Underpick Motion with Horizontal Movement to Picker . . 342
,, ,, 182. Another Lever Pick with Horizontal Movement of Picker . 344
,, ,, 183. Side Elevation of Smith's Pick-at-will Arrangement for Lever Pick 345
,, ,, 184. Plan of ditto with Details . 346

PAGE

Illustrations: No. 185. Elevation of Cam, etc. of ditto 347
,, ,, 186. Back Elevation of Hollingworth and Knowles' Pick-at-will Mechanism . . . 349
,, ,, 187. Ditto, showing Connection to Picking Stick; also Back Elevation of Shuttle Box Frame 350
, ,, 188. End Elevation and part Plan of Hattersley's Over-pick-at-will Motion . . 353
,, ,, 189. Back Elevation of ditto . 354

CHAPTER XIV

BEATING UP 355–390

Illustrations: No. 190. Sword, Connecting Arm, and Crank . . . 357
,, ,, 191. Method of Adjusting Height of Lay in Harness Looms . 358
,, ,, 192. Diagram illustrating Travel of Connecting Pin; also Position of Crank Centre when the Travel of Pin is equal to Twice the Diameter of the Crank . 363
,, ,, 193. Diagram illustrating the Travel of Pin for 60° Movement of Crank . . . 366
,, ,, 194. Curve showing Eccentricity of the Velocity of the Connecting Pin in ordinary circumstances; also the Velocity in Harmonic Motion 368
,, ,, 195. Diagram illustrating Variation of Movement of Connecting Pin according to the Position of the Crankshaft . . 380
,, ,, 196. Graphical Method of showing the Actual Travel of the Connecting Pin with Cranks of Finite Length, and Arms of Finite and Infinite Lengths 380

PAGE

Illustrations: No. 197. Elevation and Plan of Double Beat Motion . . . 389

CHAPTER XV

LET-OFF MOTIONS 391–410

Illustrations: No. 198. End Elevation of Negative Let-off Motion . . . 392
,, ,, 199. Back Elevation of Negative Let-off Motion . . . 392
,, ,, 200. Hempseed's Let-off Motion . 394
,, ,, 201. End Elevation of Negative Let-off Motion . . . 396
,, ,, 202. Side Elevation of details of ditto 398
,, ,, 203. Front ,, ,, 398
,, ,, 204. Hollingworth and Knowles' Automatic Let-off Motion for Single Warp Beam . . 402
,, ,, 205. Details of Ratchet Wheel, etc. of ditto . . . 404
,, ,, 206. Details of Shield, etc. of ditto 404
,, ,, 207. Hollingworth and Knowles' Automatic Let-off Motion for Two Warp Beams . . 406
,, ,, 208. } Automatic Let-off Motion with
,, ,, 209. } Two Vibrating Back Rails . 408
,, ,, 210. }

CHAPTER XVI

TAKING-UP MOTIONS 410–430

Illustrations: No. 211. Negative Taking-up or Uptake Motion . . . 412
,, ,, 212. Positive Intermittent Taking-up Motion . . . 416
,, ,, 213. Ditto driven from Wyper Shaft 422
,, ,, 214. "Tooth and Pick" Taking-up Motion . . . 424

PAGE

Illustrations: No. 215. End Elevation of Hollingworth and Knowles' Positive Continuous Taking-up Motion . 426
,, ,, 216. Back Elevation of ditto . 427

CHAPTER XVII

Box Motions 430–491

Illustrations: No. 217. End Elevation of Diggles' Box Motion . . . 431
,, ,, 218. Sectional Front Elevation of ditto 431
,, ,, 219. Side Elevation of Parker's Box Motion . . . 433
,, ,, 220. Front Elevation of Parker's Box Motion . . . 433
,, ,, 221. Sectional View of Sliding Block for Parker's Box Motion . 435
,, ,, 222. } Photographic Views of ditto, and its Component Parts . { 436
,, ,, 223. } { 436
,, ,, 224. } { 437
,, ,, 225. End Elevation of Hall's Eccentric Box Motion . . 439
,, ,, 226. Back Elevation of Hall's Eccentric Box Motion . . 440
,, ,, 227. Plan of Hall's Eccentric Box Motion . . . 441
,, ,, 228. Disc and Cam of Hall's Eccentric Box Motion . . . 442
,, ,, 229. Escapement Motion of Hall's Eccentric Box Motion . 443
,, ,, 230. Distorted Plan of Eccentric Box Motion . . . 446
,, ,, 231. Diagrammatic view of the Four Positions of Boxes and Eccentrics . . 448
,, ,, 232. Sectional end Elevation of Smith's Eccentric Box Motion 450
,, ,, 233. Front Elevation (Eccentrics removed) of ditto . . 452
,, ,, 234. Plan of ditto . . . 453

PAGE

Illustrations: No. 235. End Elevation and Details of Hacking's One Card-One Box Eccentric Motion . . 457
,, ,, 236. General View of ditto . . 458
,, ,, 237. } General View and detailed parts of Anderston Foundry Eccentric Box Motion . { 463
,, ,, 238. } { 465
,, ,, 239. } { 466
,, ,, 240. } { 467
,, ,, 241. Side Elevation of the "Eccles" Box Motion . . . 468
,, ,, 242. Back Elevation of ditto . 469
,, ,, 243. Plan and Details of ditto . 471
,, ,, 244. Further Details of ditto . 473
,, ,, 245. Front Elevation of Hollingworth and Knowles' Semi-positive Four-box Motion . . . 476
,, ,, 246. Diagrammatic View showing Relative Positions of Levers, etc. for all Four Positions of Boxes . . . 479
,, ,, 247. Front Elevation of Hollingworth and Knowles' Positive Four-box Motion . . . 480
,, ,, 248. Front Elevation of Hollingworth and Knowles' Semi-positive Six-box Motion . . 481
,, ,, 249. End Elevation of Hattersley's Six-box Circular Motion . 483
,, ,, 250. Front Elevation of ditto . 484
,, ,, 251. End Elevation of Hattersley's Six-chamber Circular Skip-box Motion . . . 488

CHAPTER XVIII

AUXILIARY MOTIONS: WARP PROTECTORS, WEFT FORKS, CHECK STRAPS, TEMPLES, ETC. . 492–531

Illustrations: No. 252. Elevation of Ordinary Warp Protector . . . 493

PAGE

Illustrations: No. 253. Plan of Ordinary Warp Protector 495
,, ,, 254. End Elevation of Different Type of Warp Protector . . 498
,, ,, 255. Front Elevation of Different Type of Warp Protector . 499
,, ,, 256. Plan of Improved Swell . 500
,, ,, 257. Ordinary Loose Reed Protector and Brake . . . 502
,, ,, 258. Front Elevation of New Type of Loose Reed . . 506
,, ,, 259. Sectional End Elevation of New Type of Loose Reed . . 507
,, ,, 260. Elevation of Side Weft Fork . 509
,, ,, 261. Plan ,, ,, 509
,, ,, 262. Front Elevation of Centre Weft Fork 513
,, ,, 263. Side Elevation of Centre Weft Fork 513
,, ,, 264. Plan of Centre Weft Fork . 513
,, ,, 265. Elevation of Buffers, and Martingales or Check Straps 515
,, ,, 266. Sectional Elevation of Iron Roller Temple . . 522
,, ,, 267. Wooden Temple for Hand Looms 523
,, ,, 268. Plan of Segmental Ring Temple 524
,, ,, 269. Details ,, ,, 526
,, ,, 270. Plan and Elevation of Centre Tipped Shuttle . . 529
,, ,, 271. Plan and Elevation of Flat or Side Tipped Shuttle . . 529

CHAPTER XIX

TURKISH OR TERRY TOWEL MOTIONS . . 531–542

Illustrations: No. 272. Part Sectional Elevations of Hacking's Terry Towel Motion . . 533
,, ,, 273. Part Sectional Elevations of Hacking's Terry Towel Motion . . 534
,, ,, 274. Front Elevation of Dickinson's Terry Towel Loom . . 535
,, ,, 275. Plan (part sectional) of ditto . 536

PAGE

Illustrations: No. 276. End Elevation of ditto . 537
,, ,, 277. Detailed view of part of ditto . 538
,, ,, 278. Lupton and Place's Terry Towel Motion . . . 542

CHAPTER XX

AUTOMATIC WEFT SUPPLY 542–567

Illustrations: No. 279. Plan and Elevation of Shuttle for Northrop Automatic Loom 544
,, ,, 280. Front view of Hopper, and Details of Hammer of ditto . 546
,, ,, 281. Plan and Elevation of Feeler Parts of ditto . . 550
,, ,, 282. End Elevation of Feeler Parts of ditto . . . 550
,, ,, 283. End Elevation of Hopper of ditto 551
,, ,, 284. End Elevation of Hattersley's Automatic Shuttle Changing Loom 556
,, ,, 285. Front Elevation of ditto . 557
,, ,, 286. } Detailed Views of several parts, sectional and otherwise of ditto . { 558
,, ,, 287. } { 558
,, ,, 288. } { 558
,, ,, 289. } { 558
,, ,, 290. } { 558
,, ,, 291. } Further Details of ditto { 559
,, ,, 292. } { 559
,, ,, 293. } { 559
,, ,, 294. } { 559
,, ,, 295. Sectional Elevation of the Northrop Warp Stop Motion . 565
,, ,, 296. Part Plan of the Northrop Warp Stop Motion . . 566

CHAPTER XXI

CENTRE AND SIDE SELVAGES . . . 567–577

Illustrations: No. 297. Plan and Draft of Centre Selvage Threads . . 569

PAGE

Illustrations: No. 298. Centre Selvage Arrangement with Crossing Thread on the Right of Plain Threads . 570
,, ,, 299. Ditto with Crossing Thread on the Left of Plain Threads . 571
,, ,, 300. Second Arrangement of Centre Selvage Threads; Crossing Thread up on the Right of Plain Threads . . 572
,, ,, 301. Ditto, with Crossing Thread up on the Left of Plain Thread . 572

CHAPTER XXII

CONCLUSION 577–582

Illustrations: No. 302. End Elevation of Individual Belt Motor Drive . . 581
,, ,, 303. Front Elevation of ditto . 581
,, ,, 304. End Elevation of Individual Gear Motor Drive . . 582
,, ,, 305. Front Elevation of ditto . 582

INDEX 583

CHAPTER I

INTRODUCTORY

It must not be inferred from the title given to this work that it is intended to discuss the principles or processes applied in the construction of only those fabrics composed entirely of linen or of jute. At the present time it is not unusual to find fabrics composed of two or even more materials, as in damask tablecloths, tapestries, etc., where the fibre originally employed was entirely linen in the former case, and cotton, or even silk, in the latter. Cotton warps have been used in conjunction with linen wefts for the production of union fabrics similar to those mentioned above for a period now extending over many years, and, previously, linen warps and cotton wefts were interwoven in the same kind of textures. In so far, therefore, as cotton is introduced into the construction of these unions, it will be necessary to consider yarns made from this fibre.

The origin of linen weaving undoubtedly dates far back into ancient history — in this country alone it was a recognised industry over three hundred years ago,—and the cloth itself is one of the best known and most ancient of textures. Jute weaving, on the other hand, is com-

paratively a new industry, but rapid developments in this particular branch have taken place since the introduction of the jute fibre into Scotland about the year 1830. The machinery for the manufacture of this fibre is now so near perfection, and the handling of it so excellent, that many types of fabrics composed of jute compete successfully with those made from other fibres. Rugs, towels, upholstery cloths; Brussels, Wilton, Scotch, and other carpets, may be mentioned as typical examples. Besides these (which are in many cases made entirely of jute) there are many types of fabrics which depend, more or less, upon the jute fibre as one of their constituents. The great bulk of this fibre, however, is made into the commoner classes of cloths, such as hessian, bagging, tarpauling, and sacking.

CHAPTER II

COUNTS OF YARN

In the building-up of any class of fabric one of the first considerations is the method of classing the sizes or grists of the yarn of which it is to be composed. The three fibres mentioned being so intimately related, the methods of counting these yarns are herewith given:—

Jute and Heavy Linen or Flax Yarns

90 ins. or $2\frac{1}{2}$ yds. = 1 thread, or the circumference of the reel.
120 threads or 300 yds. = 1 lea or cut.
2 cuts or 600 yds. = 1 heer.
6 heers or 3600 yds. = 1 hasp or hank.
4 hanks or 14,400 yds. = 1 spyndle.

The size or grist of the above yarns is determined by the weight in pounds (avoirdupois) per spyndle of 14,400 yds. Thus, if 14,400 yds. of yarn weigh 8 lbs., it is termed 8 lb. yarn, and so on.

Fine Linen or Lea Yarns

90 ins. or $2\frac{1}{2}$ yds. = 1 thread, or circumference of the reel.
120 threads or 300 yds. = 1 lea.
10 leas or 3000 yds. = 1 English hank.
12 leas or 3600 yds. = 1 Scotch or Irish hank.
20 English hanks or $16\frac{2}{3}$ Scotch or Irish hanks, or 60,000 yds. = 1 bundle.

The size of lea yarn is reckoned by the number of leas of 300 yds. each in 1 lb. (avoirdupois). Examples :—If 20 leas weigh 1 lb., it is termed 20's lea yarn, or simply 20's yarn. If 50 leas weigh 1 lb., it is called 50's yarn. It is usual to apply the former of these yarn tables to all jute yarns, and also to dry-spun linen or flax yarns, and the latter table to wet-spun linen or lea yarns.

From the foregoing tables it will be seen that the jute and heavy-linen yarns have a standard length and a varying weight; whereas the finer linen yarns have a standard weight and a varying length. The two distinct methods of counting are a little confusing to the beginner, for in the former case the thicker the yarn the higher is the count, whereas in the latter case the thicker the yarn the lower is the count. Both, however, may be reconciled as follows :—Referring to the jute and heavy-linen yarn table, it will be seen that there are 48 cuts or leas of 300 yds. each in one spyndle of 14,400 yds. From this consideration, and the fact that the counts of the finer linen yarn are based upon the number of leas of 300 yds. each in 1 lb., the following rule is deduced. Rule :—The leas per spyndle

(48) divided by the weight in pounds per spyndle will give the leas per pound, and therefore the lea count. And, *vice versa*, the leas per spyndle divided by the lea count, or, in other words, the number of leas per pound, will give the weight in pounds per spyndle. Thus :—

$$\frac{\text{48 leas}}{\text{6 lb. per spyndle}} = \text{8-lea yarn (8 leas per pound).}$$

And—

$$\frac{\text{48 leas}}{\text{8 leas per pound}} = \text{6 lb. per spyndle.}$$

Cotton Yarn Table

54 ins. or $1\frac{1}{2}$ yds. = 1 thread, or circumference of the reel.
80 threads or 120 yds. = 1 rap, or wrap.
7 raps or wraps or 840 yds. = 1 hank.

The size or count of cotton is determined by the number of hanks of 840 yds. each in 1 lb. (avoirdupois)—that is, 10's cotton contains 10 hanks per pound, and so on. Cotton is made up in bundles of 5 and 10 lbs. each, usually the latter. A 10-lb. bundle of 15's cotton should therefore contain $15 \times 10 = 150$ hanks.

Since the counts of both cotton and fine linen yarns are both based upon a given number of yards per pound, it follows that their counts will vary in inverse proportion to these lengths. Thus the counts of cotton will be to the counts of linen as the yards per hank of cotton (840) are to the yards per lea of linen (300) inversely :—

300	:	840	=	1	:	2·8
yards per lea.		yards per hank.		cotton.		linen.

This must be so, since the linen basis of length is contained 2·8 times in that of the cotton basis. Similarly, linen

counts may be converted into cotton counts. For instance, the equivalent cotton count of 28's linen would be :—

840	:	300	=	28's	:	10's
yards per hank.		yards per lea.		linen count.		cotton count.

$840 \times 10 = 8400$ yds. per pound in 10's cotton.
$300 \times 28 = 8400$ yds. per pound in 28's linen.

CHAPTER III

REELING, BUNDLING, AND SETTING

Reeling is resorted to for three principal reasons—viz. easiness of transport, storage, and bleaching and dyeing. In the reeling of jute and linen yarns the machine registers automatically the revolutions of the reel. One hundred and twenty of these revolutions, or 120 threads (see yarn table), make one cut or lea of 300 yds. The yarn is leased, according to its size or count, in heers, cuts, or half-cuts, and tied together by means of a "band," the quantity in the band varying from two to twelve cuts. No rule is uniformly observed in the making up of jute yarns, some spinners leasing all sizes which are to be wrought in the natural state in heers, six of these heers in each band, thus making a proper hank equal to twelve cuts. Although a standard hank contains twelve cuts, it is evidently impossible, on account of the limited space on the swifts, to adhere rigidly to this number when making up very heavy yarns. It is also considered advisable to group smaller quantities together when the yarn is intended to be bleached or dyed, and the following table may be taken as a guide in such cases :—

Up to 5 lb. . .	6 heers in band . . .	$\frac{1}{4}$ spyndle.
5 to 10 lb. . .	6 cuts „ . . .	$\frac{1}{8}$ „
11 to 24 lb. . .	4 cuts „ . . .	$\frac{1}{12}$ „
26 to 36 lb. . .	3 cuts „ . . .	$\frac{1}{16}$ „
Over 36 lb. . .	4 half-cuts in band . .	$\frac{1}{24}$ „

The yarn is then made up into bundles as near as possible of 56 lbs. each. Linen yarn, as mentioned before, is also reeled upon the 90-in. reel,[1] but is made up somewhat differently from jute. The coarse yarn up to about 8 lea is made up into half-hanks (6 cuts of 300 yds. each), and $33\frac{1}{3}$ of these go to make one bundle, or 60,000 yds. Fine yarn is made up into hanks of 12 leas each ($16\frac{2}{3}$ of these = 1 bundle). One or more of these bundles, depending upon the size of the yarn, are tied together and form what is called a "bunch" or "lump." The following is generally adopted :—

Up to 14 lea . . .	$1\frac{1}{2}$ bundles	= 1 bunch.
16 to 28 lea . . .	3 „	= 1 „
30 to 60 lea . . .	6 „	= 1 „
Above 60 lea . . .	12 „	= 1 „

Cotton is reeled on a 54-in. reel and tied up in hanks of 840 yds. each, or multiples of this, and is made up, as before mentioned, in 5 and 10 lb. bundles.

The Reed.—Although serving the double purpose of beating-up the weft of the fabric and determining the fineness or coarseness of the texture so far as the warp is concerned, the reed will be considered at present only from this latter point of view. The porter or sett of any fabric is determined by the reed through which the warp yarn is drawn. Originally in Scotland the sett for linen fabrics was based on the Scottish ell of 37 ins. ; and according to the number

[1] *Fine linen yarn above 80s is often reeled on a 54-in. reel, 100 threads or half a lea being placed in each band.*

of hundreds of splits in this measure, the reed was termed a 600, a 1400, a 1700, and so on, usually written 6^{00}, 14^{00}, 17^{00}, etc. In the jute and linen industries, however, the reed is now reckoned by the number of porters of 20 splits each in 37 ins., and for convenience in ascertaining the sett of any reed or fabric, a measure or gauge is used which between its extreme points is one-twentieth part of this width, or 1·85 ins. The number of splits in this gauge determines the sett or porter of the reed. Thus, if the gauge or measure covers ten splits, it is called a 10-porter

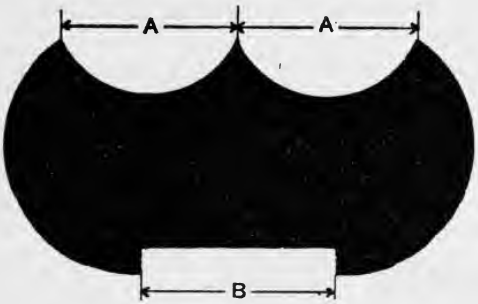

FIG. 1.

reed, and so on. As 10 splits × 20 times the measure = 200 splits on 37 ins., then 200 splits ÷ 20 splits per porter = 10 porter.

The measure shown in Fig. 1 is divided into two equal parts A, each $\frac{37}{40}$, or 0·925 of an inch, and, neglecting the shrinkage which has taken place between the reed width and the cloth, the reed or porter of plain cloth will be the number of threads contained in one part A. In plain cloth it is understood that two threads pass through each split of the reed. In jute cloths the shots of weft are

rarely counted by the porter measure, the number per inch being generally taken, and for this purpose an inch gauge is introduced as seen at B in Fig. 1. The practice of counting the shots per inch also obtains in Scotland for coarse linen fabrics. But for the finer classes of linen goods it is customary to use what is commonly called the "glass." This consists of an ordinary magnifying glass fixed in a framework of brass, and so arranged that when placed on the cloth, the threads, etc., in a given space may be readily seen and counted.

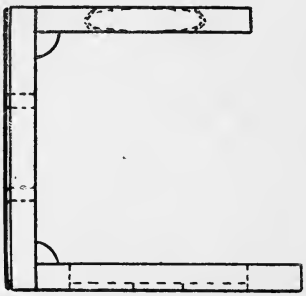

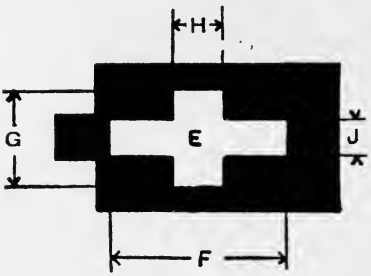

FIG. 2.

In Fig. 2 a glass is shown (in side elevation at D) in position for counting, the support, or the bottom part, being cut away as shown in the plan at E. When arranged in this way four different measures, through which the shots, threads, or splits may be counted, are obtained. In this case the measurements are: F, $\frac{37}{40}$ of an inch; G, $\frac{1}{2}$ in. (sometimes $\frac{37}{80}$ is used instead of $\frac{1}{2}$ in.); H, $\frac{1}{4}$ in.; and J, $\frac{37}{200}$ of an inch. By this latter measure, $\frac{37}{200}$ of an inch,

the sett of the reed in hundreds is readily determined. This space being contained 200 times in 37 ins., it follows that the splits in this space multiplied by 200 will give the reed. Example :—5 splits in glass $\times$ 200 = 1000 splits in 37 ins., or 10^{00} reed. If the threads in the cloth be counted, the number will be the reed in hundreds. Example :—10 threads in glass $\times$ 200 = 2000 threads in 37 ins., and 2000 threads $\div$ 2 threads per split = 1000 splits, or 10^{00} reed.

In some parts of Ireland it is customary to take 40 ins. as the basis instead of 37 ins., the reed being reckoned by the number of hundreds of splits in this width. In this case the aperture of the counting glass is contained 200 times in 40 ins. It is therefore one-fifth of an inch in size. This glass is generally used for the reed only, that on the 37-in. basis being usually used for the picks or weft. (The latter is known as the 37-in. counting glass in linen.) In some districts the reeds are reckoned by the number of splits per inch, while the number of threads in each split is indicated by a small figure immediately after that of the reed.

Thus, taking a 10's reed as an example :—

10's reed 1's = 10 threads per inch.
10's reed 4's = 40 threads per inch, and so on.

It is surprising that this system, which is so simple and so easily understood, has not been more widely adopted.

CHAPTER IV

WARP WINDING

In the preparation of yarn for the loom, the first process is generally that of warp winding, although in some few cases, where warps are made direct from the spinning bobbins, this is not necessary. Where, however, the warp yarn is to be dressed or starched, or the warp prepared by means of the linking machine, it is essential for economic reasons that the yarn be rewound on to larger bobbins, or on to spools, to suit the enlarged banks necessary for these preparatory processes. It may be mentioned here that these spools, rolls, or cheeses have practically displaced the ordinary bobbins in connection with dressing. This is chiefly due to their greater capacity, seeing that as much as one spyndle of 14,400 yds. of 8-lb. yarn is being regularly placed on one spool. This of course enables the machine to be run much longer without stoppages for refilling than is the case when the ordinary bobbins are used. Other advantages obtained from the introduction of these spools are a lower percentage of waste, a reduced initial cost, fewer breakages, and greater facility for transport. When warp yarns are received in the hank it is necessary that they be also rewound for the process of warping or dressing.

Roll or Cheese Winder.—Figs. 3 to 7 are introduced for the purpose of illustrating the roll winder as made by Messrs. Robertson and Orchar, Limited, Dundee. Figs. 3 and 4 show respectively in elevation and plan the winding mechanism of the machine. The four pulleys C, C^1, C^2, C^3 are all connected by means of a single belt D, arranged as

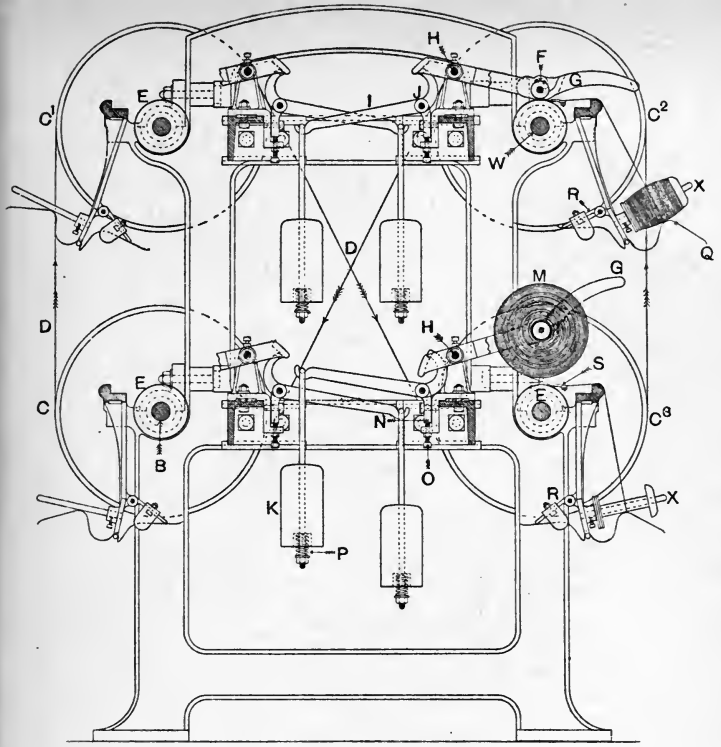

FIG. 3.

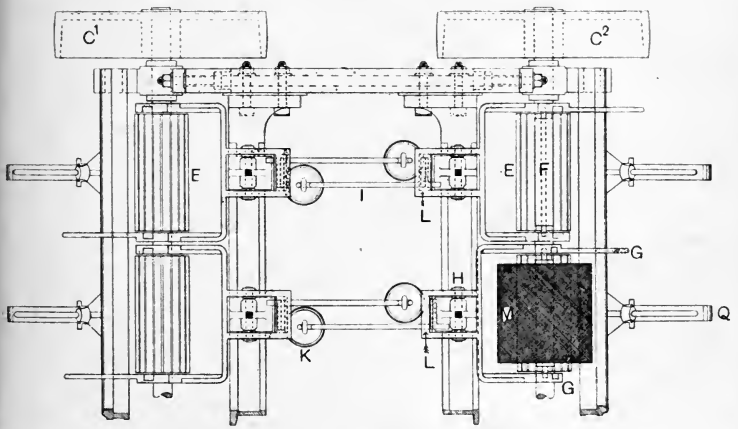

FIG. 4.

shown, to give a similar inward motion to all the fluted spool drivers E. Pulley C receives its motion from shaft B and the driving pulley A at the opposite end of the machine. Spools F (usually of wood for jute yarns, although made of paper for finer yarns) revolve on suitable spindles, and are driven by rolling contact with spool drivers E; they are carried by the two long arms of bracket G fulcrumed at H, and are kept in firm contact with the spool drivers by means of lever I fulcrumed at J, and weight K. As the spool or roll fills, the long arms of the bracket G rise gradually, and the short arms fall gradually—naturally through a shorter distance—until the extreme positions are reached. During the above movement the oblique surface of G's shorter arm bears upon and depresses the curved arm of lever I, and thus raises the corresponding straight arm and the weight K. These movements continue until the spool has reached the desired dimensions, at which time the curved and shorter arm of lever I should slip over the top of the oblique surface at the rear end of lever G, and thus by means of weight K raise the long arm of G and the spool M slightly until the latter is clear of the spool driver E. Each roll is thus automatically stopped when its required diameter is reached. This diameter may be varied at will between 6 and 9 ins. by raising or lowering the bracket N, in which the lever I is fulcrumed. This adjustment may be quickly and accurately accomplished by means of a set-screw and lock-nut O. The spiral spring P, which is supported by a washer and a nut on the end of the rod depending from lever I, and enters a recess in the weight K, is introduced to prevent vibration in the lever I when the weight K is allowed to drop back into its original position. Spinning bobbins are placed on the pins X as shown, and are tensioned

by means of the spring Q and the weighted lever R. Since

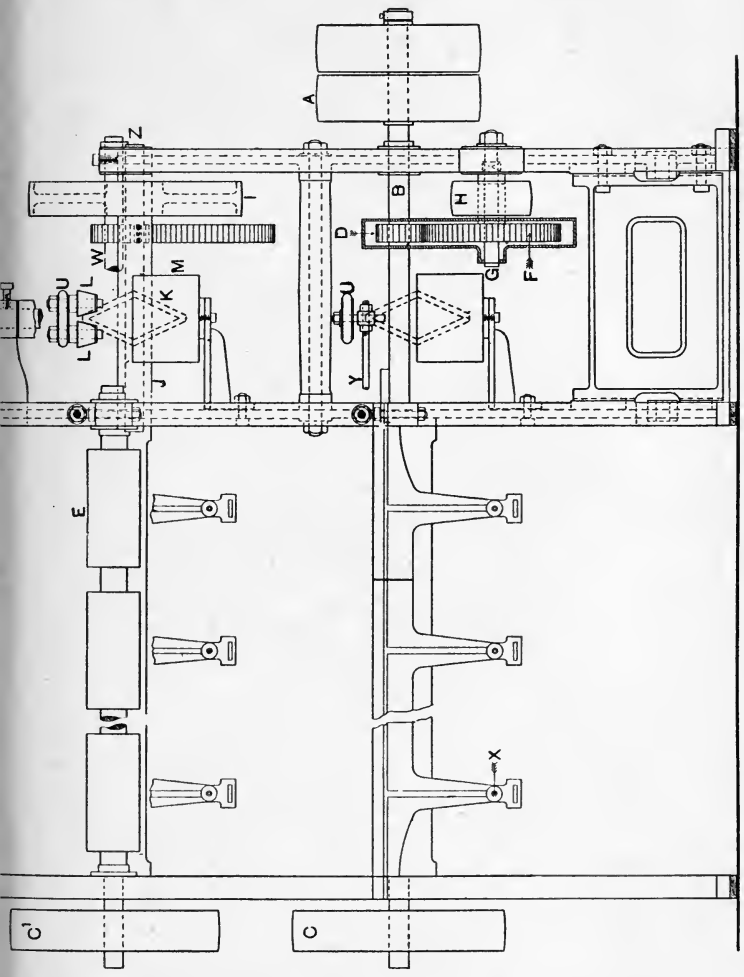

FIG. 5.

it is essential that the pressure should decrease as the

bobbin empties, the lever R is so centred that it gradually

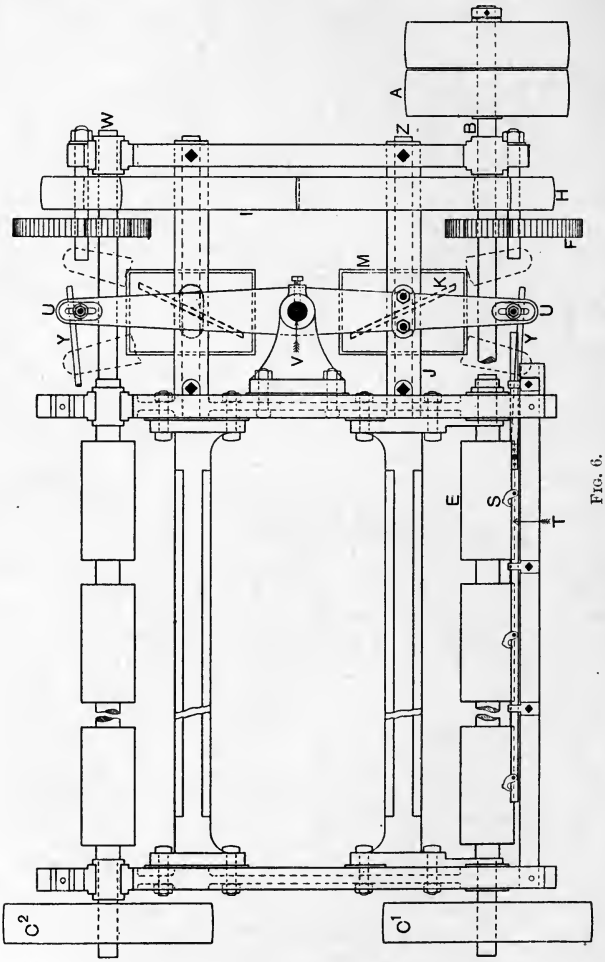

FIG. 6.

approaches a vertical position, and reduces its pressure on

the spring Q as the diameter of the bobbin decreases. The rapid traverse necessary for building the yarn on spools without flanges is imparted directly by the yarn

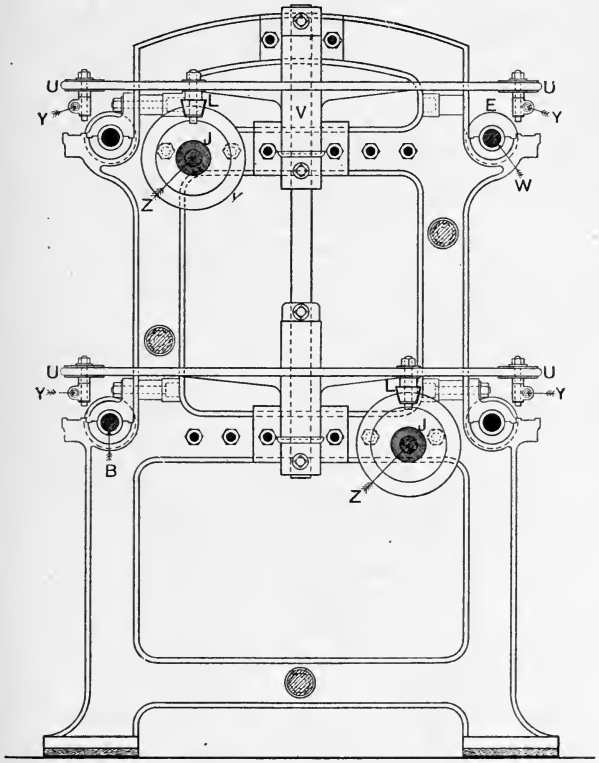

FIG. 7.

guide. This motion will be understood by reference to Figs. 5 and 6, which show respectively the side elevation and plan of the machine, and Fig. 7, which shows in end elevation the camshaft frame. The yarn guide or hook S,

Fig. 6, is rigidly fixed to the traverse rod T, which is supported by and slides in guides fixed at suitable places on the framework of the machine, and which is attached by the connecting rod Y to the traverse lever U. This latter, being centred at V, imparts an equal but opposite movement to the traverse rod T at the opposite side of the machine. Motion is conveyed to this lever as follows:— Keyed on the driving shaft B is a driving pinion D of 24 teeth, gearing with a wheel F of 75 teeth, which revolves on the stud G. Compounded with wheel F, and therefore revolving with it, is the pulley H of 7-in. diameter, which drives by means of a belt, not shown in the drawing, the pulley I of 18 in. diameter on the camshaft J, this shaft being in reality a sleeve on the stud Z. Fixed to the same shaft J is a cam or worm plate K, which has a left-handed thread for half its circle, and a right-handed thread for the other half, seen in plan in Fig. 6, in elevation in Fig. 7, whilst the path of its travel is shown in Fig. 5. This cam K revolves between the anti-friction cones L bolted to the traverse lever U, and thus imparts through U the necessary quick traverse to the rod T and the yarn guides S. The traverse, and therefore the length of the rolls, may be varied at will between 7 and 9 ins., by adjusting the studs in the slots at each extremity of the lever U. The cam K is constantly lubricated by causing it to revolve in an oil bath M. An arrangement, similar in all respects to that already described, but driven from the shaft W, conveys motion to the traverse rod T for the under tier of spools on both sides of the machine. The capacity of the machine is usually 80 spools, 40 on each side.

All roll winders for the jute and heavy-linen trade are similar in construction, and each possesses satisfactory parts for the three chief requirements of such machines,

e.g. a uniform speed of yarn, a quick traverse, and an automatic method of lifting any roll from the driving drum when the roll has reached the desired diameter. The first requirement is obtained directly by the surface speed of driving and the constant speed of the shaft which carries the spool drivers; the second is invariably obtained by means of some form of cam or split pulley, while the third is obtained by ingenious and sometimes simple methods.

Fig. 8 illustrates in elevation and plan the automatic stop mechanism as well as the tension device employed by Messrs. Douglas Fraser and Sons, Arbroath, and the detached figure is a front view of the faceplate A over which the yarn runs from the bobbin B. The faceplate itself provides a simple yet effective method of preventing the yarn jerking as it passes from side to side of the roll. When the thread is stretched from the bobbin B to either side of the faceplate it clearly forms the hypotenuse of a triangle, the other sides of which are formed by half of the straight line which joins the two extreme edges of the faceplate, and the vertical position of the thread. These sides are shown respectively by the dotted lines, C, D, and E in the detached figure. By cutting away the ends of the faceplate as shown in the plan view, the lengths C and E are kept more uniform, and hence the yarn is subjected to less strain as it is rapidly withdrawn from the bobbin.

Taking the tension device first, it is clear from the solid and dotted positions of F, which turns about point G, that the greatest pressure of the drag F on the bobbin will be when the latter is full, because the weighted roller H, when in the dotted position, has a tendency to fall. As the bobbin empties, the moment of the force decreases

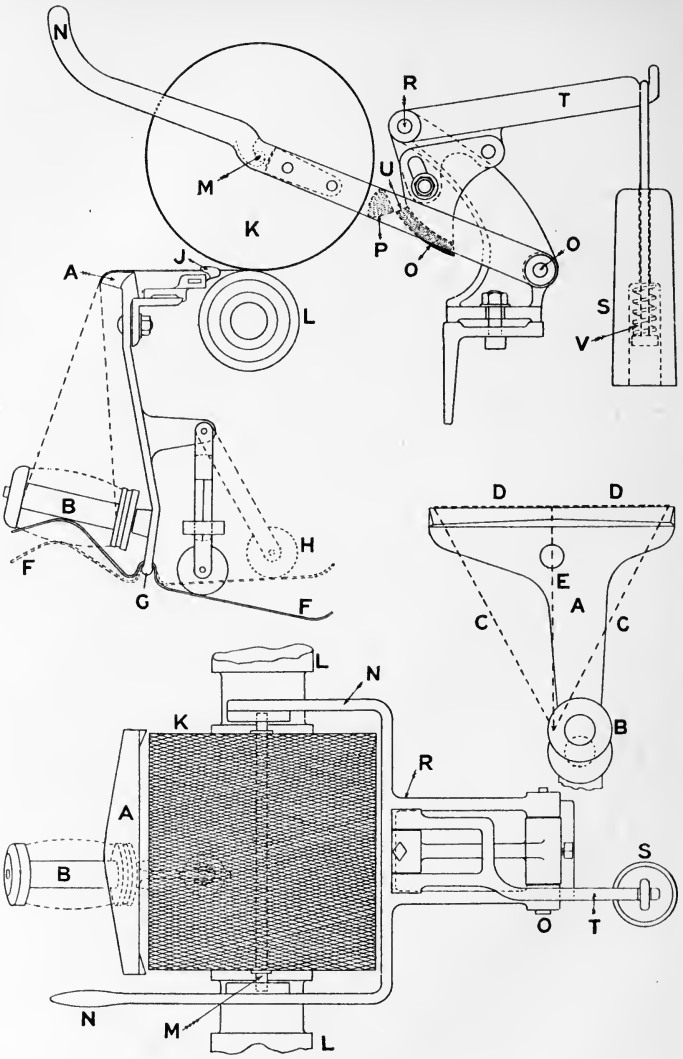

FIG. 8.

gradually, until finally the roller and its support reach the vertical position, when the force disappears. Thus the pressure on the bobbin gradually diminishes as the yarn is withdrawn.

In the elevation the yarn is shown passing over the breastplate A, through the yarn guide J, and between the roll K and the roll driver L. The roll itself is shown full, but it is wound as usual upon either a wooden or paper tube, through the centre of which passes the iron pin M; the whole is supported by the lever N, fulcrumed at O. Extending between the two arms of lever N is a bar P, the section of which is of the form shown in dotted lines; the contact between the upper surface of P and the lower curved surface of Q (also shown in dotted lines) fulcrumed at R is obtained by means of the weight S on the end of lever T. But as the roll fills, the arm N, and therefore the triangular bar P, rises until it reaches the position shown in the drawing, when the pressure is removed from the upper surface of P, and surface U of part Q slips under part P, thus raising slightly lever N and breaking the contact between the roll driver L and the roll K. A spiral spring V is also utilised in the weight to minimise vibration when the weight S drops to force part U under part P.

Roll winders are now almost invariably used for grey yarns, but bleached or dyed yarns are usually wound on to bobbins, because the bobbin flanges serve as a protection against dust and dirt, which would otherwise stain and perhaps spoil the bleached or dyed yarns.

Bobbin Winders. — There are two distinct systems of bobbin winding:—

(*a*) That which arranges the yarn on the bobbin in a convex form, the finished product being usually termed a "barrel-shaped bobbin"; and

(*b*) That which lays the yarn perfectly horizontally between the two flanges of the bobbin, and thus builds a bobbin with sides which are parallel.

The threads in both systems are parallel with respect to the section or the flanges of the bobbin, but are built convexly and parallel respectively to the barrel or core of the bobbin. The convex build is used only for comparatively heavy yarns such as jute, whereas the parallel or drum-wound bobbin is invariably used for linen yarns.

Figs. 9 and 10 show respectively the side and end elevations of a bobbin-winding machine of the former type as made by Messrs. Charles Parker, Sons, and Co., Dundee. Motion is conveyed by the pulley A to the shaft B, which extends from end to end of the machine. Fixed at regular intervals on this shaft are fluted friction wheels C, two of which are necessary to drive one bobbin. Bobbins D revolve on suitable pins carried by the arms E, the latter being centred in the brackets F. Projecting from one of each pair of arms E is a diamond-shaped piece G, somewhat similar to part P, in Fig. 8, which supports the pressing lever H, the weight of which through G and E keeps the bobbin pressed hard against the friction wheels C, these latter causing the bobbin to revolve. As the bobbin fills, it is gradually forced away from the centre of the friction wheel C until the diamond piece G gets outside the inner curve of the pressing lever H. Immediately this point is reached the outer curve of H begins to act on the inside of G, and thereby throws out the bobbin, until G is caught in the recess near the outer end of the lever H. The yarn passes as shown from swifts or reels J over traverse fingers K. These latter are fixed to rods L and receive suitable traverse through the heart-shaped cam and the connections shown. Cam M is driven by a

worm on shaft B, through the worm wheel N on the

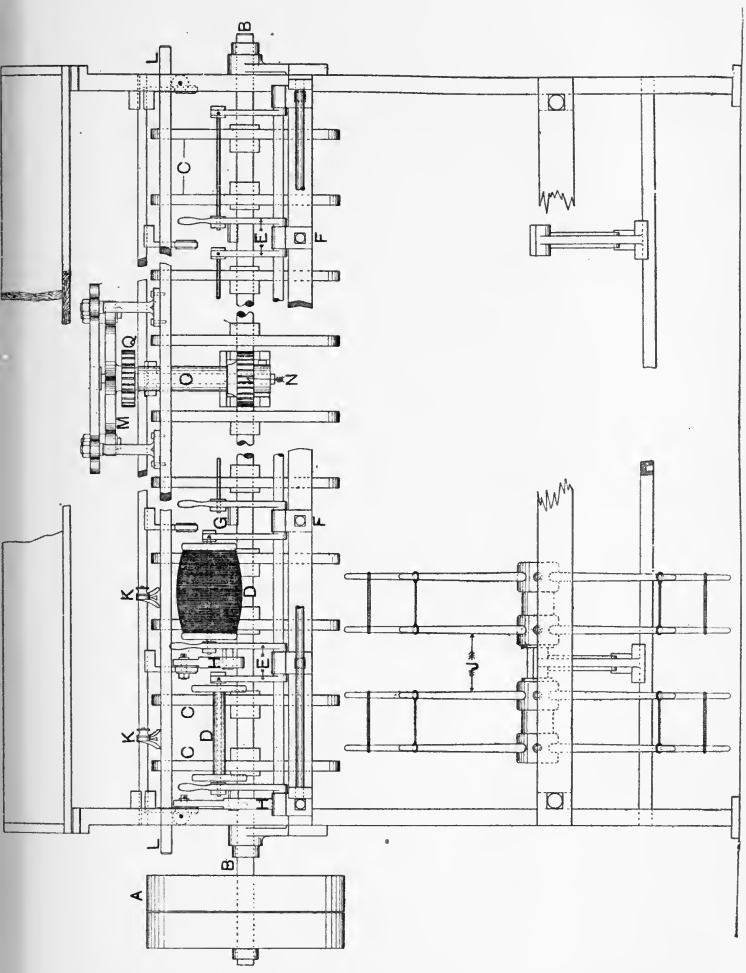

FIG. 9.

vertical shaft O, and pinions P and Q. The diameter of

the bobbin may be increased or decreased by adjusting the lever H at its fulcrum R. The yarn is tensioned by suspending a weight from a band passed round the axis of the

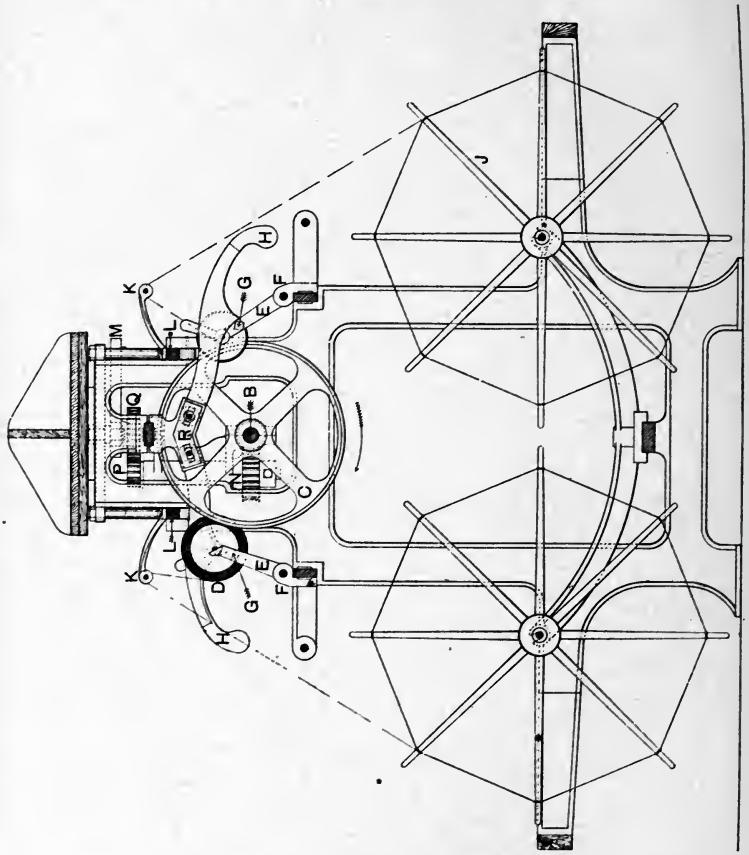

FIG. 10.

swift. The usual capacity of the machine is twenty-four bobbins each side.

Parallel Drum Winder.—A drum winder is perhaps the

simplest of all textile machines, and practically every textile machinist of repute undertakes its manufacture. Still it is probable that no two makers will build machines which are identical in detail, although all such machines possess the same main features.

Figs. 11 and 12 illustrate end and partly sectional elevation and side elevation respectively of a standard drum-winding machine. The main shaft A traverses the machine from end to end, and carries at regular intervals cast-iron drums B, about $9\frac{1}{2}$-in. diameter by 5-in. face, on which the bobbins rest, and by which they are rotated while they are being filled. The breadth of the drum depends, naturally, upon the traverse required for the particular size of bobbin, that is, the distance between its flanges which the drum just fills. Motion to the corresponding shaft on the other side of the machine is conveyed by means of crossed belts from pulleys CC to similar pulleys on the other shaft. Each flanged bobbin D is supported horizontally by a metal spindle E, which is suitably hinged to one arm of the bobbin holder bracket F, so that the spindle may be swung out readily for the removal of a full bobbin, or for the replacing of an empty one. Bobbin-holder F, of which a detail view is shown in Fig. 12, is free to move vertically in slotted guides G, and recesses are formed near the top of the guides for the free outward movement of the spindle when the bobbin-holder is in a certain position.

The following parts are provided for retaining the bobbin-holder in this position when necessary, and also for preventing it from rising too rapidly with the bobbin as the latter is being filled with yarn. Incidentally this aids in producing a firmly wound and well-filled bobbin. Mounted centrally behind each bobbin-holder is a rect-

angular lever H, the horizontal arm of which may be weighted as desired to resist the rising of the bobbin,

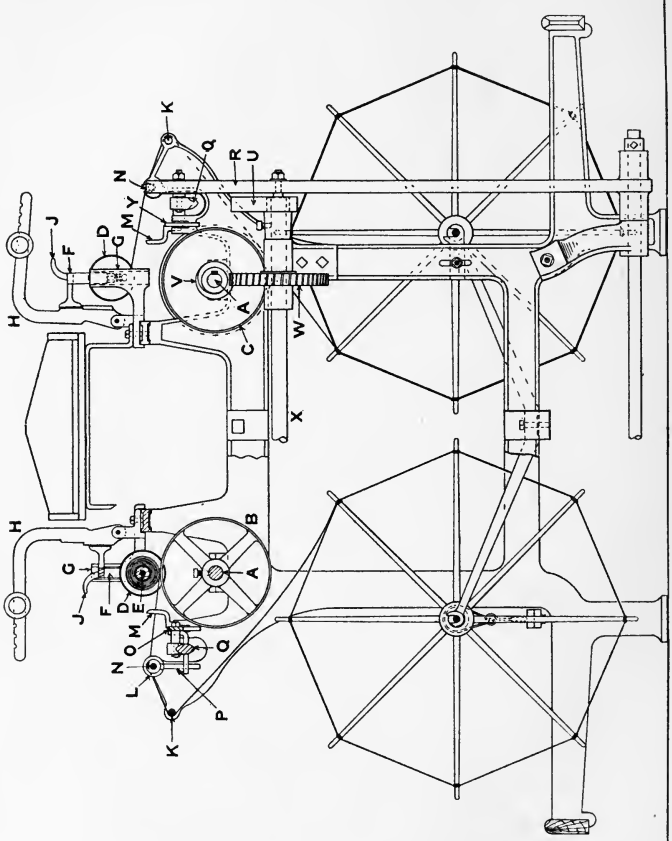

FIG. 11.

while the vertical arm is provided with a frictional face about 2 ins. long by $1\frac{1}{2}$ ins. broad, the top of which forms a projecting ledge to support the bobbin-holder

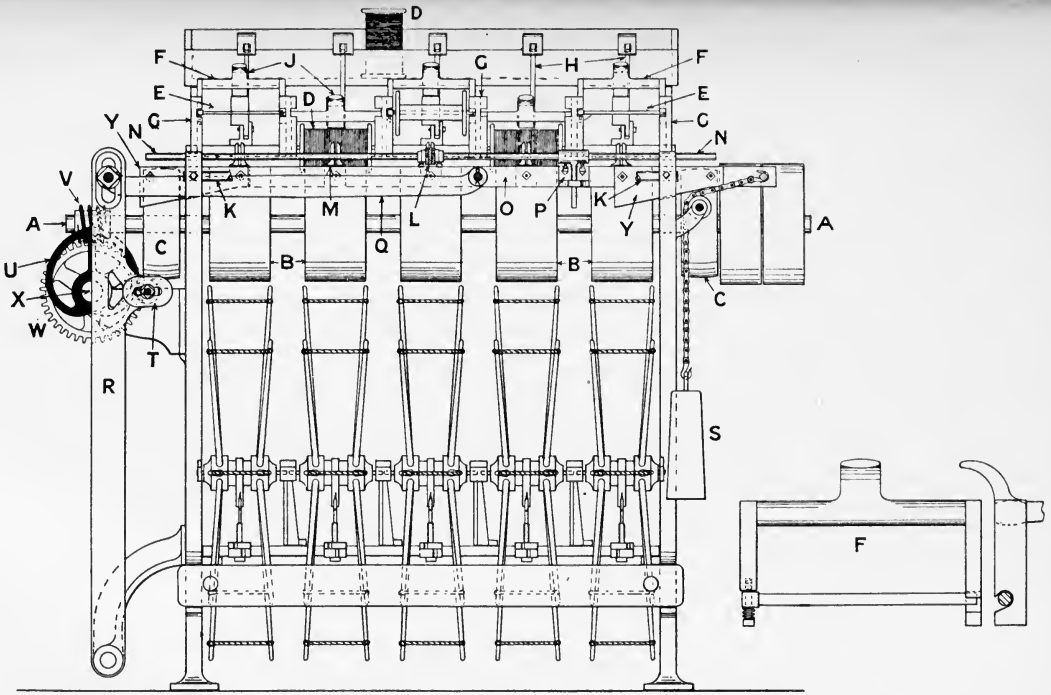

FIG. 12.

(see right-hand view, Fig. 11). Contact between lever H and its corresponding bobbin-holder is obtained by means of an arm which projects rearwards from the cross arm of each bobbin-holder (see Fig. 11), and which is provided with a similar friction face at its extremity. A curved projection J on each holder is provided, by means of which the bobbin may be raised at will into the top position for the repairing of broken ends, or for the removal of the full bobbin. Advantage is taken of the same projection for lowering the bobbin again so that the yarn may come into contact with the drum B.

As in all winding machines which wind from hanks, the yarn is extended for winding purposes on the usual form of swifts. These swifts are supported as shown, and, in order to apply the necessary degree of tension to the yarn, straps or bands are passed over the nave, and more or less weight attached according to the character and strength of the yarn. If it is linen yarn it is passed through a cleaning guide L, after having been led over guide rod K, and then through the traverse guide M. One cleaning guide only is shown, but each is composed of two or more layers of heavy, coarse flannel or felt, in the form of washers, which are pressed together between collars mounted on rod N. The latter is caused to move in unison with the guide bar O by means of the flexible connection P, so that the cleaners L are constantly in line with their respective guides M. Besides being instrumental in removing dirt and slubs from the yarn, the washers are beneficial in breaking up many bad spinning splices, and so preventing trouble in subsequent processes.

Like many machines of this class the traverse mechanism is negative in character. Traverse bar O, which carries the various yarn guides M, is attached by means of con-

necting rod Q to lever R at one end, and by chain to weight S at the other end. The tendency of the weight S is to move bar O to the right, and so keep the anti-friction roller T in lever R in constant contact with the heart-shaped cam U. As the shaft A revolves, worm V causes worm wheel W and cam U to revolve, and so move lever R and bar O to the right positively, against the action of the weight S, while the latter returns all again to the left after the peak of the cam has passed the anti-friction roller T. Shaft X extends across the machine, and a cam similar to U, but set diametrically opposite to it, is fixed at the other end, and performs similar functions for the other side of the machine.

A novel feature of the above machine is the simplicity of the method by which the friction of the yarn being wound is distributed over the whole depth of the guides M. It is well known that a comparatively soft material, such as yarn, if guided continually over the same surface at a high speed, will in time cut a groove into the hardest of metal. For this reason it is very desirable that the frictional action of the yarn should be distributed over as large a surface as possible, and, as the movement of the yarn itself would involve further friction elsewhere, the makers have preferred to move the guides gradually up and down as they are traversed from end to end of the bobbin. This they accomplish by bolting an inclined plate Y to each end of the traverse bar O; these plates cause the bar to rise in its guide slots as it travels to the right, gravity causing it to fall as it moves to the left. Since the line of the yarn from guide rod K to the bobbin is constant, and since the guides M rise and fall with the bar O as indicated, it follows that the bearing point of the guide upon the yarn will change continuously throughout one complete traverse.

The motion of the yarn guide must be perfectly constant and regular from flange to flange of the bobbin, so that the same quantity may be laid on the bobbin in each unit space, and thus build the sides parallel to the shaft. This equal distribution is determined by the outline of the cam U, which is formed to give exactly equal lateral movements to the guide bar O in equal units of time. It will be observed that as the drive is on the yarn direct, and as the layers of yarn are parallel to the core of the bobbin, the speed of the yarn passing on to the bobbin will be uniform throughout. This is a point worthy of consideration, more especially when tender yarns are being dealt with. In the case of the barrel-shaped bobbin, referred to in Figs. 9 and 10, the shape of the cam must be such that the traverse fingers K will move more slowly when guiding the yarn on to the centre of the bobbin than when approaching the flanges, and so build more yarn in the centre than towards the ends. This drive is usually considered as one in which the speed of the yarn is constant; but, although its speed at any given part between the two flanges is the same for every layer in that part, it varies slightly from point to point in each cycle of the thread guide.

CHAPTER V

WEFT WINDING

BROADLY speaking, there are only two methods of winding (pirn and cop) employed in the preparation of jute and linen yarns for the shuttle. The former is by far the older

method of the two, and is simply a power-loom development of the winding employed in the hand-loom industry. It is now practically restricted to linen weaving, and even in this branch, especially in the wider fabrics and the heavier sizes of yarns, it is gradually being displaced by the newer system of cop winding. For fine and tender yarns, however, it is not likely to be wholly superseded.

In pirn winding the yarn is wound in a conical form upon a wooden pirn or core which remains with the yarn throughout the weaving process. The wind of the yarn is parallel—that is, the successive rounds of yarn lie practically parallel to each other, a slow traverse being given to the guide finger in order to obtain this condition. Throughout the entire process the linear velocity of the yarn remains constant; this is of great importance in the winding of fine or tender yarns, and it explains the reason of the priority of this system for such yarns. Moreover, the tendency to produce waste is not so great as in cop winding. It is sometimes held that in the weaving process cops cause more waste than pirns; this is true in many cases, but the fault is more often due to defective administration than to the system of winding. This, however, is more than counterbalanced by the fact that cops are more economical from the points of view of time and space, besides making more level selvages than pirns. As a pirn empties it is impossible to avoid a gradual increase of tension on the weft thread, whereas a cop will unwind from beginning to end with exactly the same tension throughout. For this reason pirns are very much restricted in length, whereas cops can be made any practicable length without causing any increase of tension while weaving. In the winding of a cop the yarn is built in a conical form on a bare spindle which is withdrawn after the winding is

completed, leaving the yarn to retain the form of a cop as best it may. It is, however, capable of remaining stable because of the cross method of winding employed, each succeeding layer of yarn crossing the previous one at a sharp angle—a result obtained by means of a rapid traverse given to the guide finger. The linear velocity of the yarn, however, is variable, and this is the feature which makes the system unsuitable for the winding of tender yarns.

There are several different varieties of pirn winders in use, the chief difference being the method employed to obtain the differential speed of the winding spindle in order that the velocity of the yarn shall be constant whether it is being wound at the base or near the apex of the cone. In some machines the spindles are driven positively by toothed gearing, the variation of speed being obtained by the introduction of elliptical and eccentrically set wheels into the train of gearing by which the spindles are driven. In others, the spindles are driven negatively, and the variable speed obtained by what is practically a gradual and continual changing of the diameter of a driven wheel. Both systems are extensively used, and a pirn winder of the latter type as made by the Anderston Foundry Company Limited, Glasgow, is illustrated in Figs. 13 to 15. Fig. 13 shows the machine in front elevation. Keyed on driving shaft A, which makes about 240 revolutions per minute, is a driving drum B of 16-in. diameter. From B the drive is taken to the far side of the machine by means of a short open belt C, and to the near side by a crossed belt C^1 as indicated. Pulleys D are now made with removable outside flanges to permit of the belts being put on tightly. At regular intervals along shaft E driving discs F are fixed and impart their rotary movement to the faceplates G of the spindles H. Because

of the weight of H and G, and of the fact that the latter

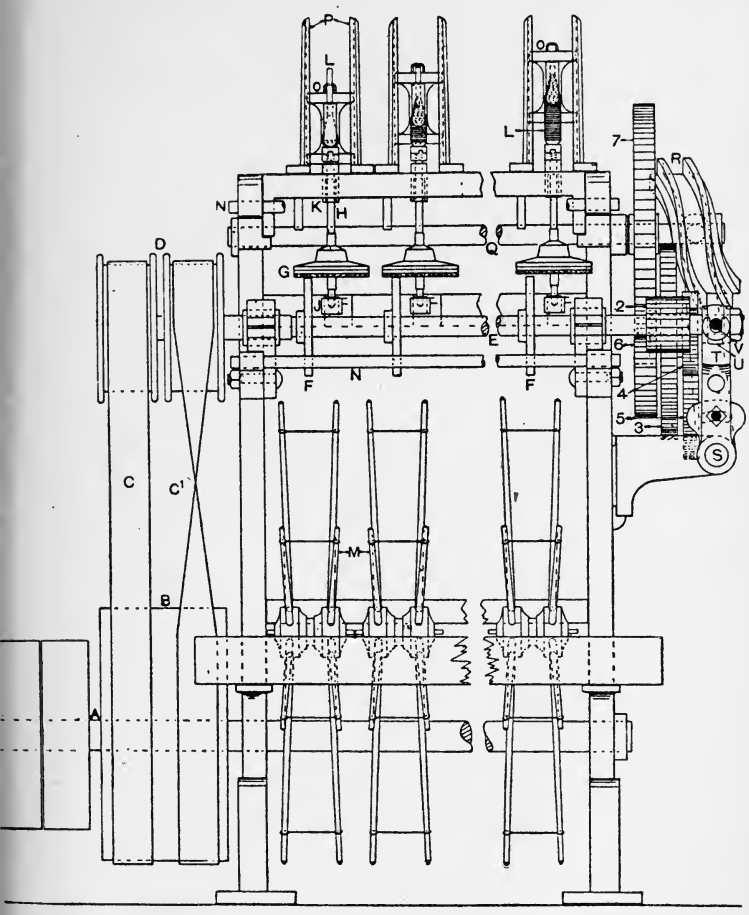

Fig. 13.

are faced with leather, sufficient grip is created between faceplates G and discs F to ensure a steady and constant

drive of the spindles H. The latter are supported vertically by footsteps J and loose collars K, and have a cap screwed on the upper end, by which the pirn L is rotated. The yarn is taken from the reels M (supported and paced or tensioned as shown in Fig. 14), is passed over guide rods N, and thence by a suitable guide finger X (see Fig. 15) is guided on to the pirn. On the upper rod N flannel discs are usually fixed, between which the yarn passes. These aid in regulating the tension on the yarn, besides cleaning it and removing many impurities. The firmness of a pirn depends principally upon the tension imparted to the yarn while winding, and upon the weight of the cone builder O which rests upon the yarn during the process, gradually rising in the slotted guide posts P as the pirn fills.

Since the relative diameters, and therefore the circumferences, of the base and top of the cone are as 3 to 1, it is evident that each layer of yarn at the base is three times the length of each round at the top. If the speed of the spindle were constant it is obvious that the velocity of the yarn would vary as the guide finger rose and fell. To avoid this the spindle is speeded up as the finger rises, and reduced in speed as the finger falls in exact proportion to the gradual decrease and increase respectively of the diameter of the cone on which the yarn is passing. This is accomplished as follows:—Keyed on shaft E, Fig. 13, at the gearing end of the machine (elevation and plan of the end being shown in Fig. 14), is a pinion 2 of 26 teeth, which, through intermediate wheel 3 of 100 teeth, wheel 4 of 34 teeth, wheel 5 of 84 teeth, and wheel 6 of 30 teeth, drives wheel 7 of 100 teeth on camshaft Q. The latter carries the positive cam R shown in both figures. Rocking shaft S stretches across the machine at this end, and

carries at each extremity a forked lever T which controls the corresponding disc shaft E through collar U and

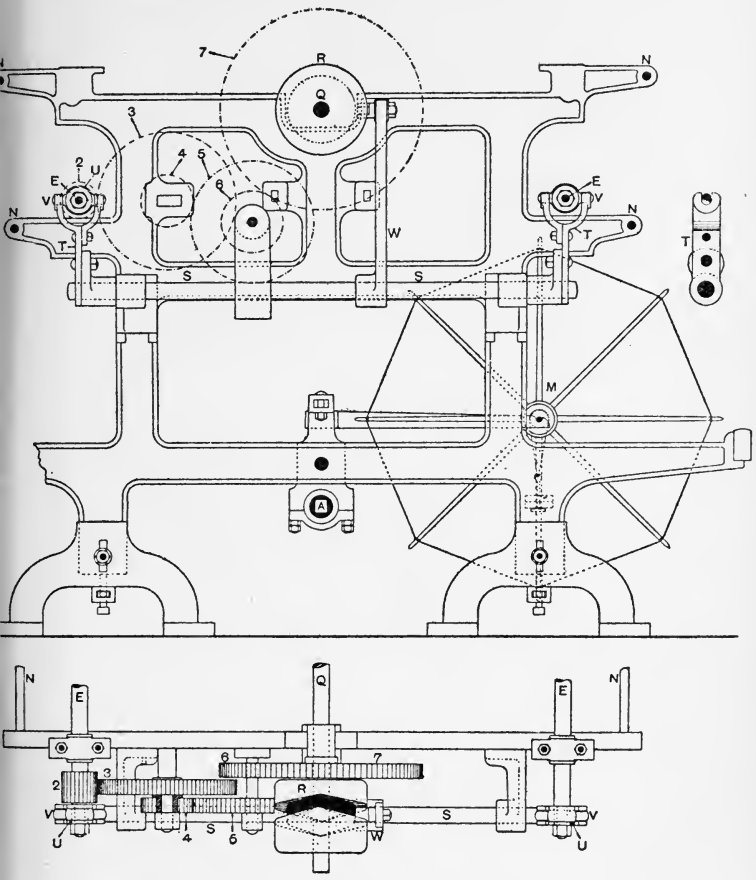

FIG. 14.

suitable projecting studs V. Keyed near the centre of shaft S is a third lever W provided with a stud and anti-

friction roller at its upper end. This stud projects into the groove of the cam R, and is moved to and fro as the latter rotates with shaft Q. The oscillating motion of lever W is conveyed through shaft S to forked levers T, which by their connection to disc shafts E cause the latter to move backwards and forwards while rotating. This end-long movement of shaft E (about $1\frac{1}{2}$ ins.) is continually altering the driven diameter of the faceplates G, and therefore the speed of the spindles H and the pirns L. As shaft E travels to the right of the figure, discs F approach the centre of the spindles H and reduce the effective diameter of plates G, causing the spindle speed to be increased, while at the same time the guide finger X, Fig. 15, is gradually rising to the top of the cone. Conversely as shaft E travels to the left of the figure, discs F approach the edge of the plates G, thereby increasing their effective or driven diameter and reducing the spindle speed, while the guide finger X gradually guides the yarn to the base of the cone. From this it is obvious that shaft E and the guide finger X must move in unison, and to ensure this a second cam Y on shaft Q imparts motion to the guide fingers. These latter (see Fig. 15, which is a sectional elevation of the machine) consist of a double-armed lever fulcrumed at Z in the cone builder O. In virtue of gravitation and the pull of the yarn, the heel of the pendant arm of X continually presses against a travelling plate 8 which extends from end to end of the machine, and is fixed at these points to suitable sliding bars 9, these latter being in turn connected by rods 10 to levers 11, which are fulcrumed at 12 and carry at 13 suitable studs and rollers for cam Y to work against. Both bars 9 are connected by a strong spring 14 which keeps both levers 11 in touch with the cam and ensures their

working together. As cam Y rotates, levers 11, bars 9 and plates 8 are pushed or pulled to one side, the pendant arm of X is pushed forward or allowed to recede, and the finger X is raised or lowered respectively. When the pirn L has been filled to the desired height it is automatically stopped by the following arrangement. Lever 15, ful-

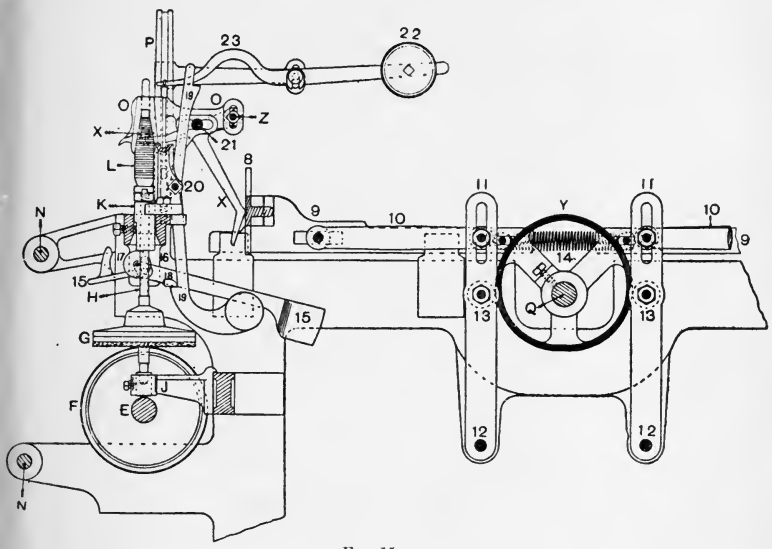

Fig. 15.

crumed in bracket 16 in line with the spindle H, is weighted at its extreme right, while at a point a little to the left of its fulcrum it supports a small disc 17, which is held just in touch with the under-side of the loose collar K by means of the projecting piece 18 resting on the catch of lever 19 fulcrumed at 20. These two are kept in contact by reason of the position of the weight at the lower end of lever 19, but as the cone builder O is raised by the filling of the

pirn, stud 21 comes in contact with, and gradually presses forward, the upper end of lever 19 until the lower end relieves the piece 18, when the heavy end of lever 15 falls and the short arm raises disc 17. This carries with it collar K, which lifts spindle H and faceplate G clear of the driving disc F. The height to which the pirn may be filled is regulated by the position of stud 21 in the cone builder O. Counterbalance weight 22 and lever 23 permit of very fine or tender yarns being relieved of practically the whole weight of the cone builder O.

Pirns vary very little in size, the usual dimensions being from $5\frac{1}{2}$ to $6\frac{1}{2}$ ins. long by 1 in. diameter. Cops vary more considerably and lend themselves more readily to variation both in length and diameter. In the jute and linen trades generally 8 to 10 ins. long by $1\frac{1}{4}$ to $1\frac{3}{4}$ ins. in diameter may be taken as regular sizes. These dimensions, however, are altered to suit the various kinds of fabrics, and also the different diameters of yarns.

Cop machines vary very little in principle, and Fig. 16 gives a general idea of the arrangement of the mechanism in the latest cop winding machine as made by Messrs. Charles Parker, Sons and Co., Dundee. The main shaft G is driven by belts or by motor, and upon this shaft, which runs the whole length of the machine, a number of skew bevel wheels A (corresponding to the number of spindles on that side of the frame) are keyed. Bevel wheel A imparts a continuous motion to the bevel pinion B, which rests on a bush C in the rail D. Pinion B revolves loosely on spindle E, but a projecting key in the socket of clutch F fits into a key-way in the spindle, and by this connection the two parts revolve together when desired. Three projecting pieces (one only shown in black) are cast upon the upper face of pinion B, and corresponding recesses are

formed in the lower part of clutch F. The above-mentioned key-way, fully $\frac{1}{16}$ in. deep, extends over the entire

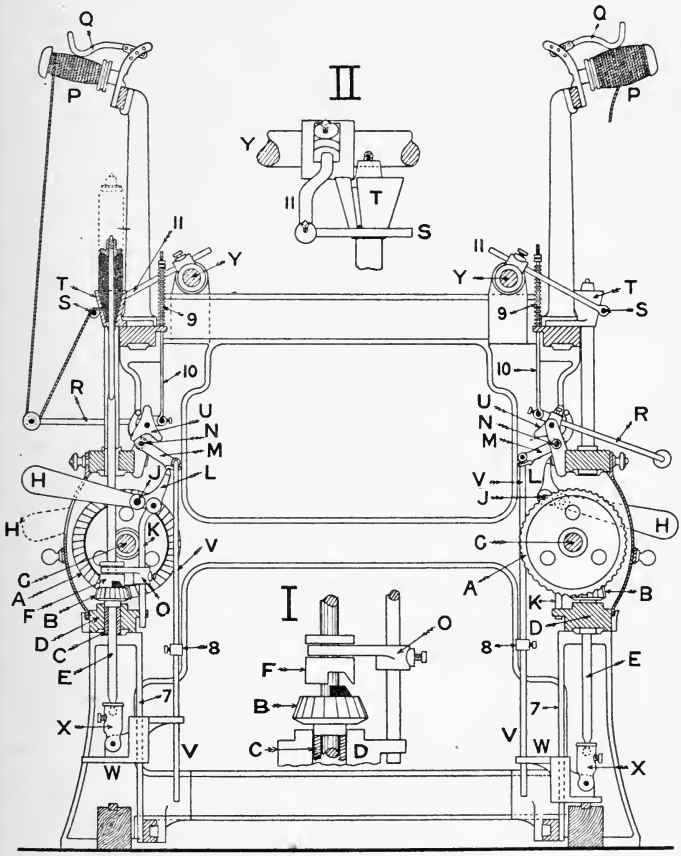

Fig. 16.

length of the round part of the spindle E, and by means of this slot the spindle may slide easily up or down the

key in the socket of clutch F. Since the pinion B is driven positively, and the clutch F connected to the spindle in the manner indicated above, it is evident that, when the pinion and clutch are in contact, as shown on the left side of the drawing, the spindle will be rotated; but if the clutch be raised to the position illustrated in inset I, the spindle will cease to rotate. The two parts, B and F, are placed in contact by raising the clutch lever H to its highest position, and thus forcing down the short arm L, the rod K, and the clutch fork O. The clutch lever H, fulcrumed at J, remains in this position, and pinion B and clutch F are retained in contact by means of a step or recess formed on the straight arm of lever M, fulcrumed at N; this recess engages with the extreme upper end of arm L of the clutch lever. The spindle E will therefore rotate so long as the parts retain the positions shown on the left side of the illustration. If, however, through any cause, the clutch lever H should fall to the dotted position H^1 (the position shown also on the right), it is clear that the rod K would rise, and would consequently lift the clutch fork O; the latter would in turn raise clutch F clear of the pinion B, and thus cause the spindle E to stop. It is desirable that the spindle should stop not only when the cop has reached the proper length, but also whenever a thread breaks or becomes slack, and parts are provided to accomplish this in both cases. The spinning bobbins P are placed on suitable supporting pins, and the yarn is tensioned by means of weighted levers Q. On the right-hand side a full bobbin is on the pin, while on the left the thread from a partially emptied bobbin is shown passing under the porcelain guide at the end of the sensitive lever R, then over the oscillating guide finger S, and through the slot of the cone T. As the spindle rotates, the yarn is drawn

forward, and accumulates on the spindle in the form demonstrated by the sectional cop—the particular inclination of the nose of the cop being determined by the angle of the cone. The angle contained between the two sloping sides of the nose varies usually from 22° to 26°, that is, the inclination of the nose from the centre line of the cop is 11° to 13°. Sensitive lever R is set-screwed in a lug which projects from the three-lobed part U, the latter being suitably fulcrumed; hence if the yarn breaks, or runs too slack, the sensitive lever R will fall, and will cause the upper lobe to come in contact with and to press forward the upper or curved arm of lever M, thus raising the recess on the end of the lower arm of lever M clear above the upper point of the short arm L of lever H. The heavy lever H then falls, rod K is lifted, and so is fork O and clutch F, the combined movement resulting as stated in the stoppage of the spindle. To stop the spindle when the cop has reached a predetermined length a rod V is provided, which is secured by the upper end to lever M, and which passes freely through a lug projecting from the back of the footstep bracket W. The front portion of W supports the spindle footstep X, and, as the cop fills, spindle E, footstep X, and bracket W are raised together, the latter being maintained in its proper vertical plane by sliding on the rectangular guide 7. The distance between the upper and inner arm of the bracket W and the collar 8 on rod V determines the length of the cop, and the collar 8 is adjustable so that cops of any practicable length may be wound. As the cop is gradually filled, the footstep bracket W slides up guide 7, and also up rod V, until the upper face of W reaches the lower face of collar 8; any further upward movement of W causes collar 8 to rise, and ultimately the rod V raises lever M and releases the upper

part of L, thus allowing H to fall, when the spindle is immediately stopped. The two lower lobes of U prevent the lever R from rising too high or falling too low by coming in contact with the projecting fulcrum N, while the arm L strikes a flat part on the bracket which supports lever M, and thus limits the fall of lever H. In the right-hand figure the levers R and H are in their lowest positions and in contact with the parts which are used to arrest their downward movements.

When the collar 8 is raised by W, the cop will be of the dimensions indicated by the dotted lines. The spring 9 on the end of rod 10 attached to the rear end of sensitive lever R tends to relieve any sudden strain which is thrown on the yarn.

The necessary traverse to the yarn is imparted by the upward and downward movements of guide finger S, which is set-screwed to the traverse lever 11 ; the latter is in turn set-screwed to a suitable holder on the rocking shaft Y. Care should be taken to see that the traverse lever 11 and guide finger S allow the thread to reach the bottom of the slot in cone T as illustrated in inset II., as otherwise the nose of the cop will not be built satisfactorily. Inattention to this point is one of the chief causes of soft-built cops, and of cops breaking down in the shuttle while weaving.

The rocking shaft Y receives its motion from the main shaft G, Fig. 17, by means of an eccentric 2 keyed on shaft G, eccentric rod 5, and arm Z. The latter is provided with a slot so that the degree of oscillation of rod Y may be varied. In order to increase the diameter of the cop, slightly raise the position of traverse lever 11, Fig. 16, by adjusting the nuts 3 and 4 on the eccentric rod 5, Fig. 17, and increase the traverse of the same lever to the necessary extent by moving the stud 1 in the arm Z nearer to the

shaft Y. A decrease in the diameter may, of course, be obtained by an opposite adjustment. This shift will alter every spindle on the same row, but should it be desired to change only one spindle, this may be done by lengthening or shortening, as far as possible, traverse lever 11, when a corresponding decrease or increase respectively in diameter will be obtained. (The apparent departure from the principles of leverage is due to the position of S with respect to T, and to the fact that the flexibility of the yarn causes the latter to lag considerably behind the movement of the traverse lever 11, and consequently to receive a much reduced traverse.) The increased diameter can also be got by adjusting the position of the traverse lever 11 on the shaft Y, so that the finger S will travel further up the cone T. This, however, as already mentioned, produces an unsatisfactorily built cop, as the diameter should not be increased without a proportionate increase being given to the traverse.

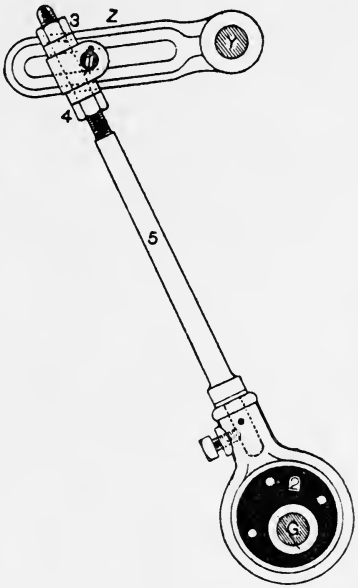

Fig. 17.

CHAPTER VI

WARPING, BEAMING, AND DRESSING

THERE are at least seven different methods employed in the preparation of jute and linen yarns for the loom, irrespective of those used for pattern work and for short lengths generally. These are :—

1. That by which the chain is made in one or more parts on a warping mill, and then beamed on to a weaver's beam.

2. By which the warp is made in one or more parts on a linking machine, and then beamed on to a weaver's beam.

3. By which the yarns are run direct from a bank on to a weaver's beam, and are either left dry or are starched or dressed in the process.

4. By which a definite proportion, say, $\frac{1}{2}$, $\frac{1}{3}$, $\frac{1}{4}$, $\frac{1}{5}$, $\frac{1}{6}$, etc., is run and dressed on to each of 2, 3, 4, 5, 6, etc., warping beams, and then all beamed dry on to a weaver's beam.

5. By which similar proportions indicated in No. 4 are run dry on to warping beams, and then all dressed and run simultaneously on to a weaver's beam.

6. By which the yarn is chained in definite proportions of the total number of threads as in No. 4, then dyed in the chain form, beamed on warper's beams, and then ultimately dressed and run simultaneously on to a weaver's beam as in No. 5.

7. By which the warp is beamed on to small sectional beams, each of which constitutes a distinct section of the

complete width of the weaver's beam. They are then either woven direct from the sections or transferred to an ordinary weaver's beam.

The warping mill is still largely employed in the preparation of all kinds of pattern warps, and for the production of short lengths of warps which are made up of fancy yarns or coloured yarns, say for carpeting and similarly striped goods. It is also much used for preparing warps intended to be delivered and to be woven by manufacturers in various districts where spinning is not practised, and particularly for export. It is, however, being gradually displaced, except for short lengths, by the more modern linking machines.

Warping machines are in most cases driven by hand, although in some few cases they are driven frictionally by power. Fig. 18 illustrates, in elevation and plan, the ordinary type of hand-driven warping mill. It is built upon, and revolves about, a vertical axis or centre post A, from which project radial bars B ending in uprights C—the latter being kept rigid and equi-distant by stay rods D. The mill is driven by a grooved hand wheel E, round which, and also round the lower end of uprights C, an endless band F is passed. The circumference or "round of the mill" is usually from 10 to 13 yds., and is for warping calculations divided into spokes, a spoke being the distance between any two uprights C. Thus a 10 yds. mill may have 24 spokes; 11 yds. mill, 26 spokes; 12 yds., 28 spokes; 13 yds., 30 spokes, and so on. The number of spokes, however, may vary in mills of the same circumference. Sometimes this circumference is arranged for a given number of ells (37-in. measure). The total height of the mill varies from 6 ft. to 7 ft. 6 ins., giving about 5 ft. to 6 ft. 6 ins. clear working space. In warping,

the yarn is "laid" or wound on the mill in a spiral form

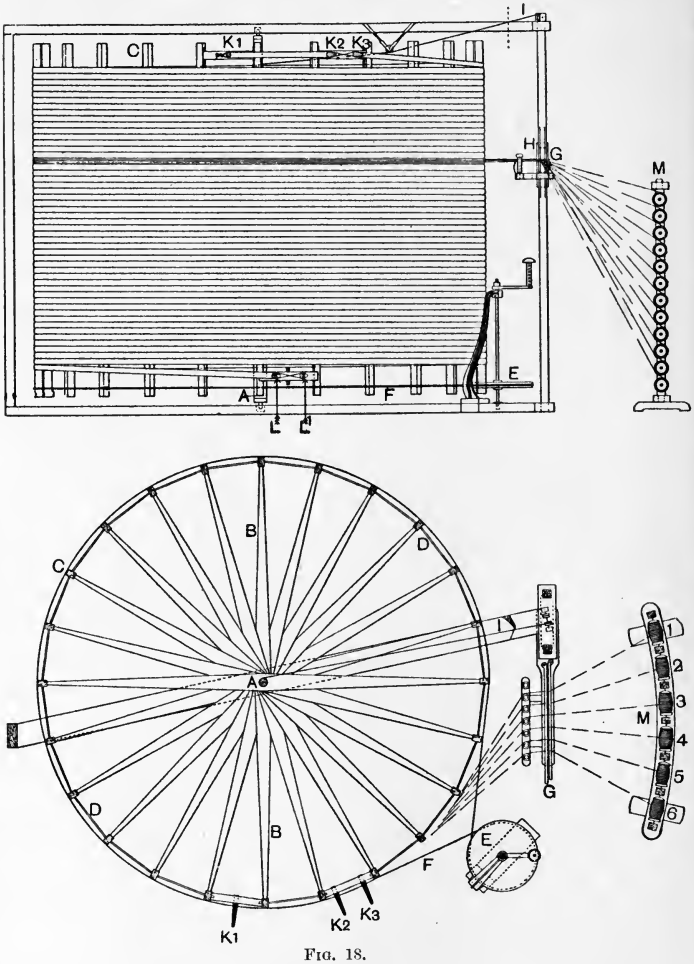

FIG. 18.

by lowering and raising the "heck" or guide reed G

while the mill is revolving. This lowering and raising of the guide reed is accomplished by suspending the "heck-box" H (to which the guide reed is fixed) to a cord or band I; the band is then passed over and under a series of pulleys fixed to the frame and to the heck, and finally attached to the centre post of the mill. According to the direction in which the mill is driven, a definite length of cord is either given off or taken on by the centre post at each revolution, thus lowering or raising the guide reed.

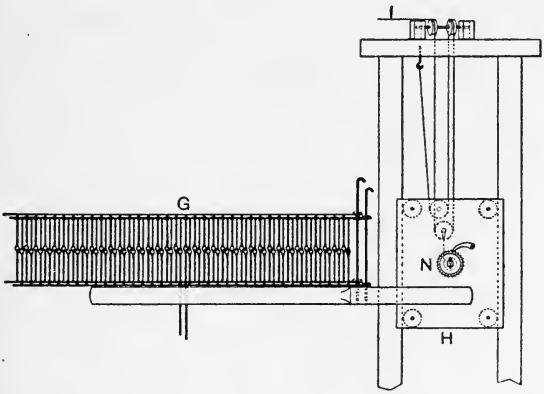

FIG. 19.

By reference to Fig. 19 it is seen that cord I passes over four pulleys before being taken to the centre post, thus dividing the part given off in one revolution of the centre post into four equal portions, and therefore allowing the heck-box to fall only one-fourth of the length given off. The reverse action, of course, holds good when taking up.

To calculate the fall of the heck for one revolution of the mill (neglecting the thickness of the cord), multiply the diameter of the centre post, say 2 ins., by 3·1416, and divide by the number of cords by which the heck-box

is suspended — in this case four. Then $\frac{2 \text{ ins.} \times 3{\cdot}1416}{4 \text{ cords}}$ = 1·5708 ins.; that is, from the centre of one round of yarn to the centre of the next round will be 1·5708 ins. If the working height of the mill be 78 ins., then 78 ins. ÷ 1·5708 ins. = 49·6, or practically 50 rounds. Supposing the mill to be 12 yds. in circumference, then 50 rounds × 12 yds. each = 600 yds. of chain which may be laid on if necessary. Any shorter length may be obtained by changing the position of forks L, which may be fixed at any suitable point on the mill.

The "bank" or "bobbin creel" M (Fig. 18) is a wooden frame in which the necessary and most convenient number of bobbins are placed for the making of the warp. In ordinary work these are usually spinning bobbins, winding being dispensed with. The capacity of the bank is usually 72 bobbins, although the number generally employed varies between 45 and 65, and is, if possible, a measure of the total number of ends required. Thus, suppose it were required to warp a chain of 256 splits or 512 ends (a split meaning two threads or ends, plain cloth), the warper would place 64 bobbins in the bank, this being the greatest number between 45 and 65 which is a measure of 512. In selecting the number of bobbins care has to be taken that it will give a suitable number of "bouts" in which to run the chain (the term bout means a full traverse of the mill from forks K to forks L, and back again to K). In the above case we should have four bouts. 64 ends × 2 = 128 ends in one bout; 128 ends × 4 bouts = 512 ends in the chain. For practical reasons this would be too much to put on the mill at one time, and it is therefore usual to take the chain off in parts. In the case under notice two bouts would be run on to

the mill, and then taken off by linking them; then other two bouts would be warped and removed in the same way. When it becomes necessary to take the chain off in three parts, there may be either six or nine bouts in the chain. Each part should, of course, have the same number of bouts, so that the process of beaming may be carried out under satisfactory conditions. Before proceeding to describe the operation of warping, it is necessary to give a short description of the heck or guide reed G, Fig. 19. In appearance it resembles a coarse iron camb (rather than reed) of two leaves, with thirty-six eyes on each leaf, and set so that the eyes of one leaf are midway between those of the other. The threads of yarn from the bobbins pass through these eyes, and as the heck rises or falls are guided on the mill in a spiral or screw form, as already stated. Each leaf of the heck, with the corresponding half of the yarn, may be raised at will, and the lease formed by each alternate thread being passed over and under, or under and over, respectively, as shown on the forks K, Fig. 18. The operation of warping is as follows:—After bringing the heck to a suitable level, the warper begins with the top bobbin of row No. 1, and takes each in succession in that row; then proceeds in a similar manner with No. 2 and succeeding rows. The first thread is passed through an eye in the back leaf of the heck; the second thread through an eye in the front leaf of the heck; and so on, back and front alternately, until all are entered; the ends are then tied together, and the heck raised until it is level with the forks K. The warper then divides the yarn equally by raising the back leaf of the heck, and passes the yarn thus divided over the first and second forks; divides the yarn again by raising the front leaf, and passes the yarn over the third fork, thus forming the

"thread-by-thread" or drawer's lease. This done, the mill is driven round in the proper direction, the heck meantime falling, until the necessary number of rounds is on; this, of course, being determined by the length of the chain and the circumference of the mill. Suppose, for example, that the warp is to be 540 yds. long, to be made on a 12 yds. mill, and to be keeled or marked for five cuts; then

$$\frac{540 \text{ yds.}}{12 \text{ yds.}} = 45 \text{ rounds of mill.}$$

Having placed forks L, L^1 at the proper point, the warper proceeds to form the "pin" or beamer's lease—*i.e.*, he or she divides the total number of threads in the chain (512) into a given number of equal portions, such number depending on the width of the beam for which the chain is intended. In this case 72 divisions or pins will be taken, and as this lease is formed on reaching forks L, L^1, and again immediately on turning back, or twice in every bout, it follows that it will be formed $4 \times 2 = 8$ times during the warping of the chain. Then $\frac{72 \text{ pins}}{8 \text{ times}} = 9$ pins or divisions into which the threads in the bank will require to be divided. $\frac{64 \text{ threads in bank}}{9 \text{ pins required}} = 7$ threads and 1 over, or

8 pins with 7 threads each = 56
1 pin with 8 threads..... = 8
64 threads.

The general formula for the number of threads per pin is obtained by dividing the total number of threads in the warp by the total number of pins in the width between the flanges of the beam. In this particular case:—

$\frac{512 \text{ threads}}{72 \text{ pins}} = 7\frac{1}{9}$, the average number of threads per pin.

Having formed this lease, the mill is driven in the opposite direction. But before proceeding to the top the warper marks or "keels" the yarn at the proper points for cutting when woven. This is done by counting off the proper number of rounds from the bottom and marking the yarn in black or other coloured ink. In this example, $\frac{45 \text{ rounds}}{5 \text{ cuts}} = 9$ rounds per cut, so that at points on the 9th, 18th, 27th, and 36th rounds, directly above forks L, L^1, the yarn would be marked. In addition to the cutting marks it is usual to put a differently-coloured keel mark on each round of the mill, termed the guide or beamer's keel, and intended for his guidance only; this practice, however, is not rigidly adhered to. After keeling, the mill is driven until the forks K are reached, when the drawer's lease is formed, the yarn passed round the first fork, the mill turned, and the lease again formed. At this point, and before running down for bout No. 2, the heck is "tempered" or allowed to fall about half-an-inch by letting go one or two teeth of the ratchet wheel N, Fig. 19. This slight adjustment prevents the second bout from lying exactly over that of the first, and also ensures that all the bouts are as near as possible equal in length. Having run bout No. 2 and formed the lease at forks K for the fourth time, the yarn is cut and the ends tied round the first fork similar to the beginning, and a knot is also tied on the ends hanging in the heck. To preserve the beamer's and the drawer's lease, bands are passed between the threads at forks K^2, K^3, also at L, L^1, and firmly tied in these positions. The warper then lifts the yarn off the first fork and proceeds to draw it away, linking it meanwhile into a chain. When about two rounds are withdrawn the heck is raised to its original level by means of the

ratchet N, Fig. 19, and the yarn attached as before to the forks K. The warper then proceeds to link off the remainder of the first part, at the same time running on a portion of part No. 2, which is in all respects similar to the first.

The above describes the machine and the method by which practically all warps, intended to be beamed dry, were made up to a recent date. At the best it is a comparatively slow process, and, except in the hands of an efficient operative, unsatisfactory chains are common. Even with skilled workers it is difficult to prevent faults, particularly variations in the length of groups of the threads in one part, hence it is not surprising to find that the linking machine is being used more and more for the preparation of dry chains for weaving, for ropemaking, and for similar purposes. The linking machine has been used for some considerable time in the cotton trade, and, with slight alterations, is capable of being employed satisfactorily in the jute and linen trades. At present there are several in general use in the Dundee district.

Three photographical reproductions of the linking and measuring machines appear in Fig. 20, and if these be referred to in conjunction with Figs. 21 to 32 which illustrate a full range of the machines and apparatus, a good idea of this ingenious and useful invention will be obtained. Figs. 21 to 24 represent graphically the complete range as used in the jute trade; they indicate respectively the spool or bobbin bank, the leasing apparatus, the measuring machine, and the linking machine. In the last machine, Fig. 24, the linked chain is seen dropping into a box, or else sliding down an inclined plane to be deposited on the floor as illustrated in the upper photograph in Fig. 20. The makers provide special apparatus for leading the linked

chain from the machine and depositing it into a frame fixed at some convenient place near the delivery side of the linking machine.

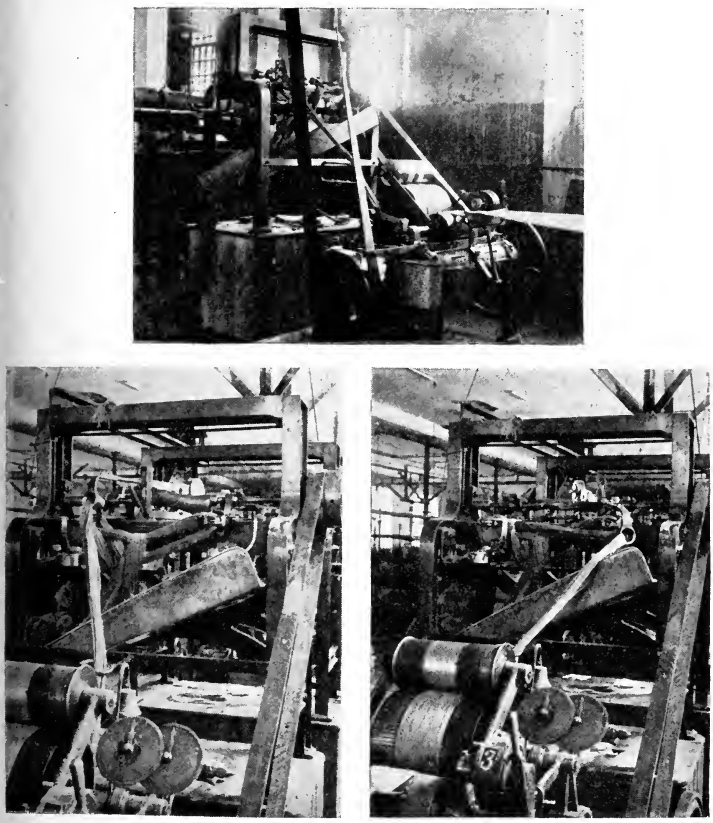

FIG. 20.

The measuring machine, Fig. 23, is driven through pulley A direct from the main shaft, and a belt at the

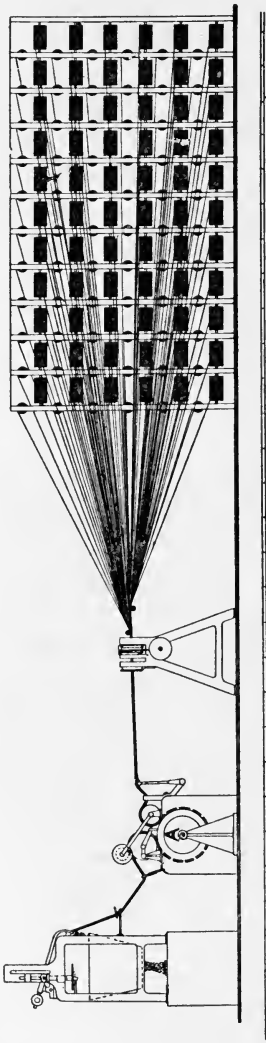

Fig. 21.

Fig. 22.

Fig. 23.

Fig. 24.

opposite side of the measuring machine communicates the drive to the linker. The delivery of warp from the measuring machine is constant, but although the take up of the warp by the linker varies slightly from moment to moment in one complete cycle, it is evident that the average speed must be the same as that of the measuring roller in order that the warp may neither get too tight nor yet collect between the two machines.

It is unnecessary to give a description of the bank; the only thing that need be said is that one side only is shown in the figure—the other side being identical, and the whole capable of accommodating from 300 to 400 spools. The remaining machines will be described separately.

Fig. 25 illustrates an end elevation of the leasing apparatus, while Fig. 26 is a front elevation showing one side only of the frame as viewed from the bank, together with the parts for forming the lease.

The threads from the bank are collected in the ordinary way and first passed over roller A, and then under roller B. They

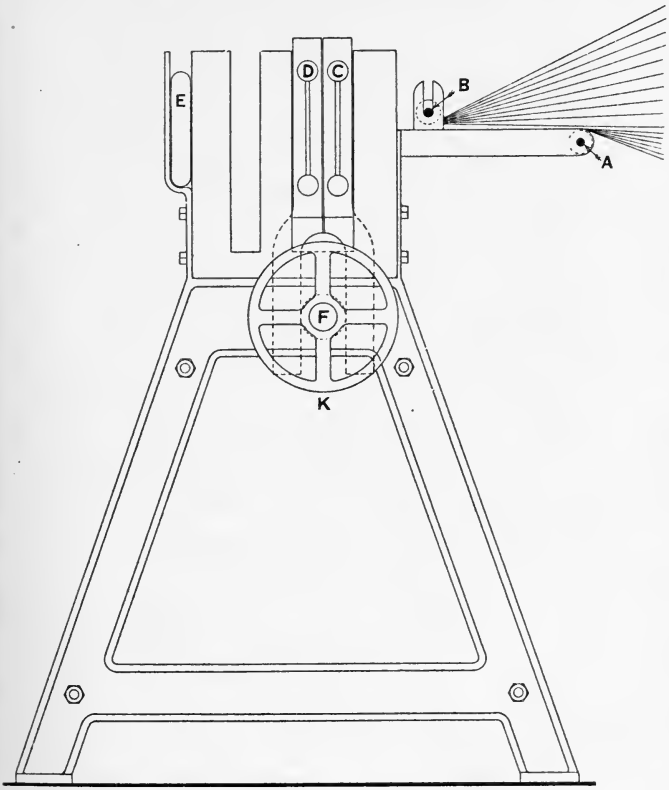

Fig. 25.

are then drawn through the two leasing reeds C and D, the odd threads passing through the centre portion of the soldered splits in one reed, say C, and through the long splits in the other reed D, while the even threads pass through

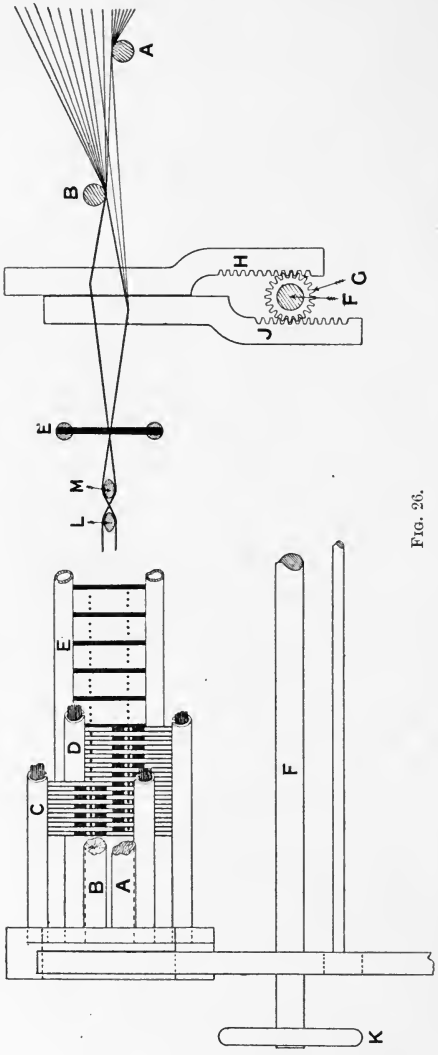

Fig. 26.

the long splits in reed C, and through the centre portion of the soldered splits in reed D. They are then grouped into definite numbers, termed pinfuls, and each group passes between two of the pins in pin frame E. The number of threads between each pair of pins should be the same, or nearly so, for any one warp, but the number per pinful may, and will vary for warps of different setts. In Fig. 26 it will be seen that there are six threads in each pinful.

The mechanism for obtaining the thread by thread or drawer's lease consists of shaft F, which carries at each end of the frame a pinion G. This

pinion G is in gear with the racks H and J of the leasing reeds C and D, and it is evident that when wheel K is rotated, one rack will rise and the other will fall, thereby raising one leasing reed and depressing the other. In Fig. 26 the racks are shown in position for inserting the first lease rod L—the reverse movement being, of course, necessary when it is intended to insert lease rod M. It is usual to pick the pin lease or beamer's lease by hand. This operation is easily done provided that the pin frame E is pushed to one side so that every pinful of threads will bear hard on the side of their respective splits, and thus separate the pinfuls effectively.

After leaving the leasing apparatus, the threads pass to the measuring and marking machine, Fig. 23, details of which appear in Figs. 27 and 28. The group of warp threads A, distinctly indicated by the heavy line, first passes over a concave support B, then through an oval opening in bracket C, over guide roller D, around drum E, over measuring roller F, and under pressure roller G; it is finally deflected and passed through another oval guide H, previous to being led to the linking machine.

The measuring machine is driven direct through pulley J, and the speed reduced by means of pinion K, wheel L, pinion M, and wheel N. Sufficient grip between the drum E and the measuring roller F is obtained partly by pressure roller G, and partly by means of a strong spiral spring (not shown) acting on rod O, and communicating its force to the shaft P, of measuring roller F, through the lever Q, fulcrumed at R.

The measuring roller F is one yard in circumference, consequently bevel wheel S, which rotates with the measuring roller, will make one complete revolution for each yard of yarn passed between the rollers. Bevel wheel S, Fig.

28, is geared with bevel wheel T of the same number of teeth, hence shaft U, and single thread worm V, Fig. 27,

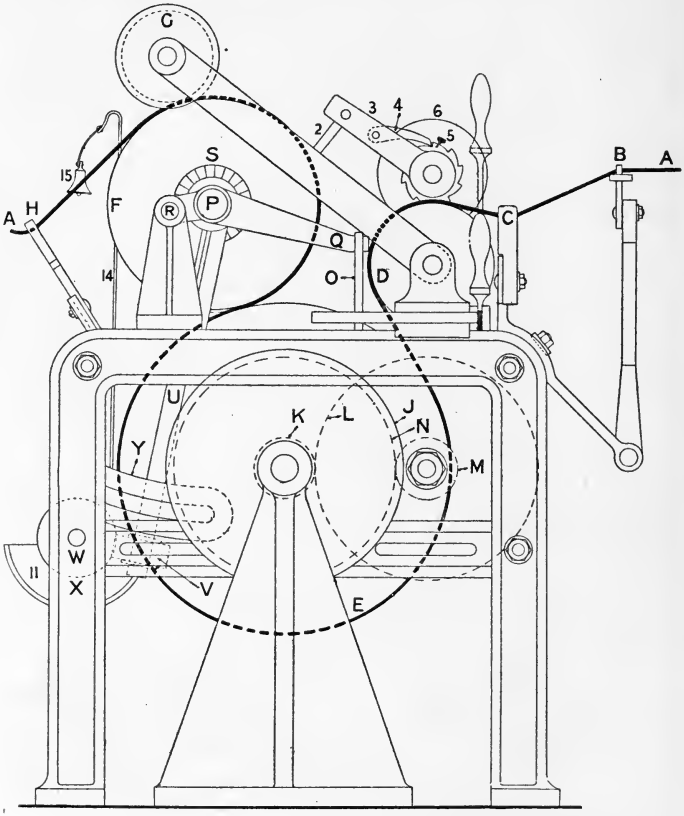

Fig. 27.

will make one revolution for each yard of yarn. Clearly, then, it is possible to make shaft W make one revolution for any reasonable length of piece by introducing a wheel

X with the same number of teeth as the laid cut should

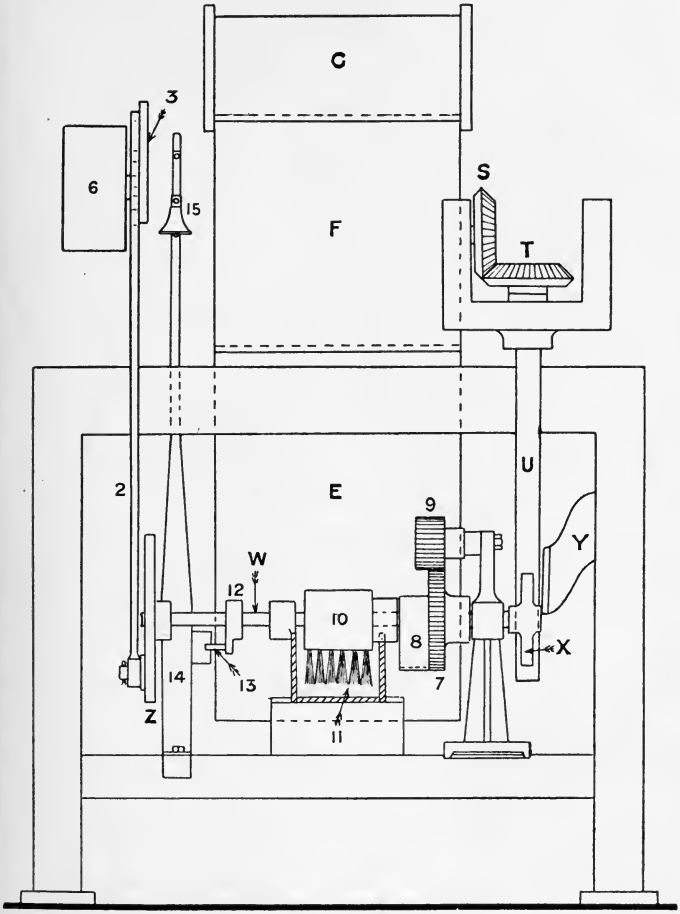

FIG. 28.

contain yards of yarn. The bracket Y, concentric with

shaft P, facilitates the employment of different sized wheels X according to the lengths desired.

The parts marked S and onwards are introduced not only for measuring the warp, but also for marking it every cut length, and for registering the number of cuts which pass through the machine. These functions are performed as follows—The shaft W, Fig. 28, makes one revolution per cut, and so will the disc Z; therefore rod 2 will receive an up-and-down movement every cut. This rod 2 moves rod 3, Fig. 27, to which pawl 4 is attached. The pawl 4 moves the ratchet wheel 5 one tooth, which is equivalent to one-tenth of a revolution of wheel 5. In line with the ten ratchet teeth, but enclosed in box or clock case 6, are the numerals 1 to 10 which move in unison with wheel 5, and which are exposed to view in succession in the glass of the clock (No. 3 is seen clearly in the bottom right-hand photo in Fig. 20). The clock which is usually supplied with the machine is driven direct from shaft P, and consists of two dials; these dials are also seen in Fig. 20, but are not in use for this class of work.

The marking motion is as follows:—On the same shaft W, a wheel 7 moves continuously, and at one point a pin projects which carries round the weighted part 8. The latter has a few teeth which come in contact with the wide teeth of pinion 9, driven by wheel 7; this arrangement ensures that the weighted lever will drop every revolution at precisely the same point. It will be seen that the weighted lever 8 and brush 10 drop almost one-half a revolution when the former is free to drop; consequently wheel 7 makes this proportion of a revolution before the pin again catches the weighted lever 8. The brush is so arranged that the ends of the bristles, which carry the ink from box 11, come in contact with the warp or drum E

when falling, and thus mark the cutting keel for the weaver's guidance. Between the brush 10 and disc Z is placed a collar 12, from which a pin 13 projects. Every revolution this pin comes in contact with a flat spring 14, and continues to force the spring backwards until the brush is ready for dropping. The brush is dropped and the spring released at the same moment, and when the pin has thus relieved the spring 14, the latter naturally vibrates and rings bell 15 which is attached to the end of the spring.

Figs. 29, 30, and 31 are respectively front elevation, plan, and end elevation of the linking machine—the last and most important machine in the group. For some classes of work this machine rests on the floor, but in the case under notice it is raised to a position about two feet from the floor in order to provide sufficient height for the linked chain to drop. The threads of the warp are condensed by passing them through an iron eyelet A before being taken to the trumpet-shaped carrier B of the lever C. This lever is fulcrumed at D, Fig. 31, and receives a motion of a rather complicated nature for the purpose of carrying the yarn from side to side of the machine, and for placing it in suitable positions to suit the movements of the supplementary linking mechanism. The trumpet-shaped carrier B describes the figure 8 as it would appear when on its side, thus ∞ ; its vertical movements being due to the peculiarly shaped cam E, while its lateral movements are obtained by the oscillation of bracket F. A belt from the measuring machine transmits the motion to fast and loose pulleys G and H, the former communicating the motion to the main shaft J, in the centre of which is the cam E. Shaft J extends beyond the opposite framework, and carries a bevel wheel K, which, through bevel wheel L and a vertical shaft, transmits the movement

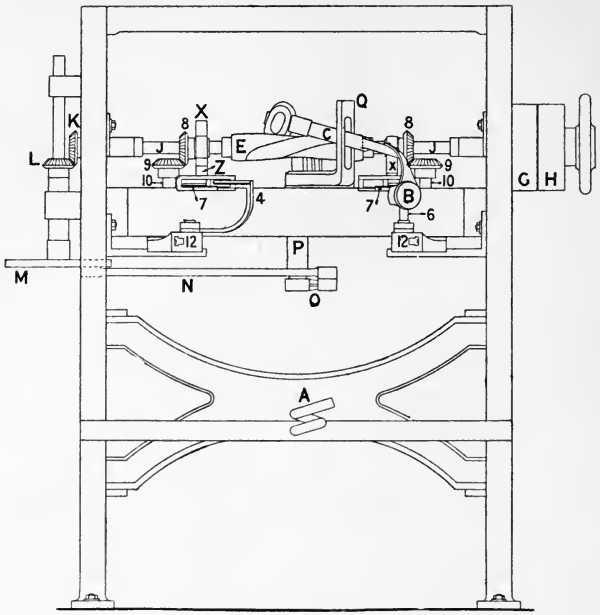
K
L
X
8
J
9
10
Z
7
4
E
C
Q
8
J
9
10
x
7
B
6
12
12
P
M
N
O
A
G
H

FIG. 29.

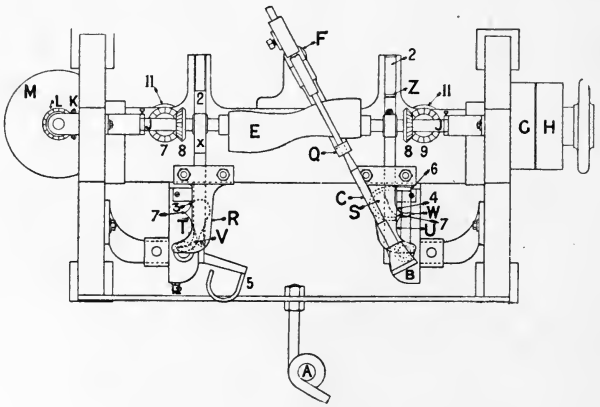
F
2
Z
11
M
L
K
11
2
E
7
8
x
Q
8
9
6
C
4
S
W
7
U
7
T
R
V
5
B
A
G
H

FIG. 30.

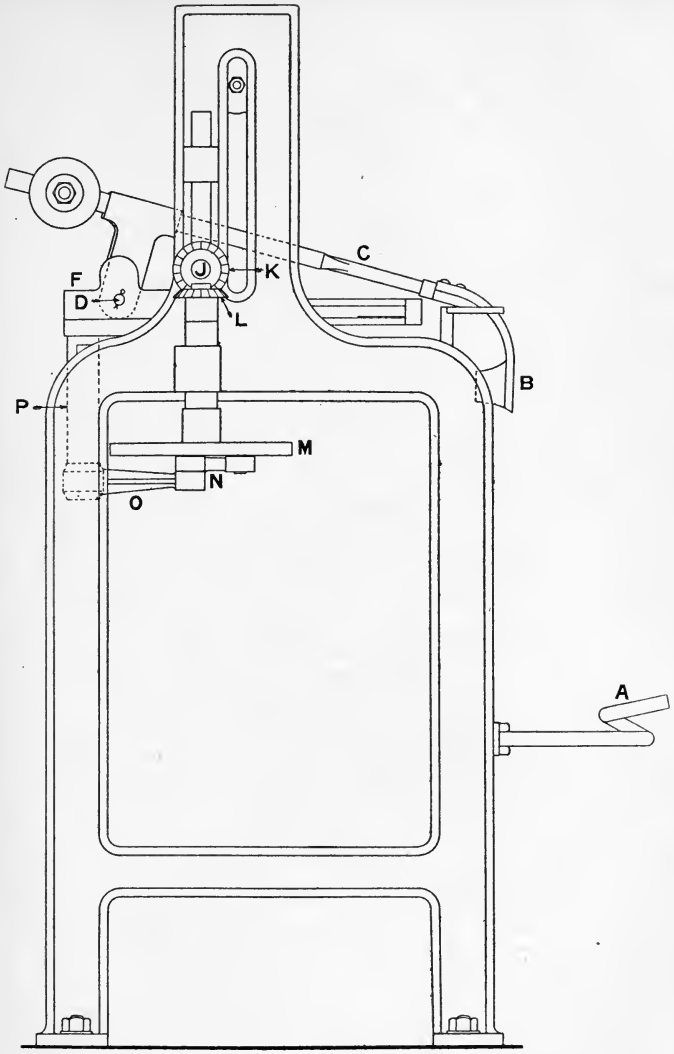

Fig. 31.

to disc M. At the proper distance from the centre of disc M is fixed a stud upon which connecting rod N is placed, and as the disc rotates, the end of rod O, and therefore vertical shaft P, are oscillated through a sufficient angle to communicate the necessary travel to rod C. The guide Q moves in unison with the lever C, and the slot in Q is long enough to permit of the vertical movement of lever C. The actual function of the trumpet-shaped carrier B is to convey the group of threads from left to right, and from right to left, and to bring the threads from the under side over the ends of brackets R and S alternately, and to place them into the recesses T and U.

Immediately under the brackets R and S are sliding hooks V and W—the hook of the former being shown near the end of the bracket, whereas the hook of W is beyond the limit of the recess U. Each hook is alternately pulled to the back position (that occupied at present by W) by means of a cam X on shaft J. The two cams X are set diametrically opposite, so that every half-revolution of shaft J either one or other cam comes in contact with a finger Z, which projects perpendicularly from the upper surface of slide 2 to which the hook V or W is attached. It will thus be seen that the movements of the hooks synchronise with the movements of lever C. When the trumpet-shaped carrier B of lever C is carrying the yarn upwards to place it in recess T, the hook V is full forward, and, similarly, when the yarn is being placed in recess U, the hook W is full forward, so that the yarn may be placed behind the point of the hook, the curved part of which at this moment coincides with the recess T or U. As the trumpet-shaped carrier B is approaching the extreme left or right-hand position the threads are in the recess T or U, and the hook V or W is carrying them backwards in order

to place them in front of rotating hook 5 or 6, the latter of which at this moment is coincident with the back groove 4 on the right hand, but hook 5 is at its outward position on the left hand.

The point between the two recesses, say 3 and T, or 4 and U, is formed by a small brass plate 7, which yields as the yarn is being drawn back by hook V or W, but which springs forward immediately to its position when the yarn has passed into recess 3 or 4. The hook 5 on the left rotates clockwise, so that the hooked part gets behind recess 3 just before hook V draws the yarn back—the corresponding hook 6 on the right is in this position. The hook V thus forces the yarn over and into the hook 5 when the latter has moved to its limit in a clockwise direction; hook V then quickly springs forward again ready to receive the next length presented by the trumpet-shaped carrier B. When this is being placed in recess T and on hook V, the hook 5 (which would then be under bracket R in a similar position to what hook 6 is at present) reverses and rotates counter-clockwise into the position shown on the drawing, and in doing so carries the loop over the end of bracket R, and consequently over the warp which is for the moment suspended on the end of the bracket R. This movement will perhaps be better understood by examining Fig. 32, in which hook 5 has just rotated counter-clockwise, and placed the loop 15 over the loop 16, which still remains over bracket R, but which will be treated similarly the next time the trumpet-shaped carrier moves from the left-hand side.

Hooks 5 and 6 are operated by means of bevel wheels 8 and 9, Figs. 29 and 30, and vertical shaft 10, on the end of which is a disc 11. From a pin near the periphery of this disc a rod connects the disc to the end of rack 12,

which in moving backwards and forwards rotates pinion 13, Fig. 32. Pinion 13 and finger 5 are compounded and both rotate on stud 14; consequently, as the rack 12 moves backwards and forwards, the finger 5 is rotated clockwise and counter-clockwise through about 270 degrees. The order of the linking of the yarns is easily followed by means of the heavily-marked arrows and the progressive

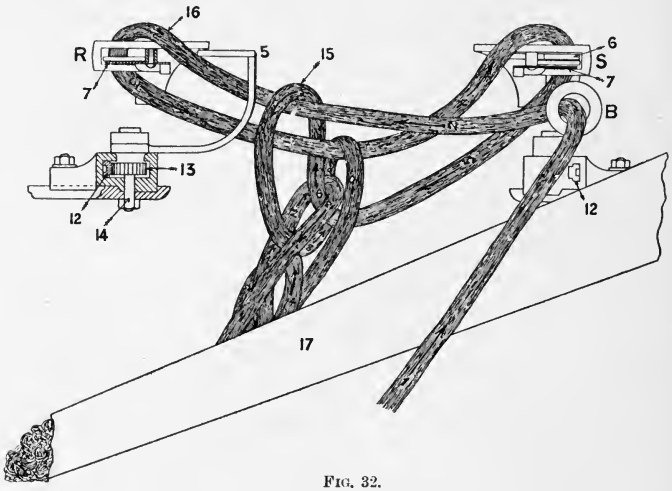

FIG. 32.

numbers which appear immediately behind the arrows. After the chain has been linked as indicated, it drops into the inclined channel which directs it on to the floor as illustrated.

The production of this linking machine varies from 24 to 30 yds. per minute when operating jute yarns, but this speed can be increased for cotton yarns. In some machines the linking apparatus is duplicated, one above the other, in which case two chains may be linked at the

same time; while in other cases, where linking is not essential, the yarns from the bank pass through an ordinary warping machine, the pressing roller of which drives a balling frame. Here the group of threads, in the form of a tape, is wound into a large roll of a similar shape, and in a similar manner to those made by roll winding machines.

Chain Beaming.—After the warp or chain has been made on the warping mill, the linking machine, or by any other similar method, it is necessary to wind the yarn on, and to distribute it equally over, a weaver's beam, or over a warper's beam if the yarn has still to be dressed. This is done on what is termed a dry-beaming machine, one of the different types of which is illustrated in Fig. 33. The ends of the chains, containing the beamer's or pin lease, are passed round the three rollers A, which are set from 12 to 20 feet behind the actual beaming apparatus. In some machines fixed tension bars are used instead of rollers. By means of the pin lease the beamer spreads the warp over the swinging and fixed "raddles," "eveners," or "wraiths" B and C to the width of the beam, from flange to flange. This should always be a few inches more than the width the warp is to occupy in the reed. After leaving the eveners the ends are passed under the guide roller D and attached to the loom beam E, which may be driven either fast or slow as the beamer finds necessary. The pressing roller I is introduced to make the beam as firm and solid as possible. In order that weaving may proceed satisfactorily it is essential that the beam should be firm, and that the different parts of the chain should be tensioned equally. The eveners B and C, which resemble coarse reeds, are about 6 ins. deep, and have movable caps. The pitch or sett in common use is $\frac{5}{8}$ in., although finer and

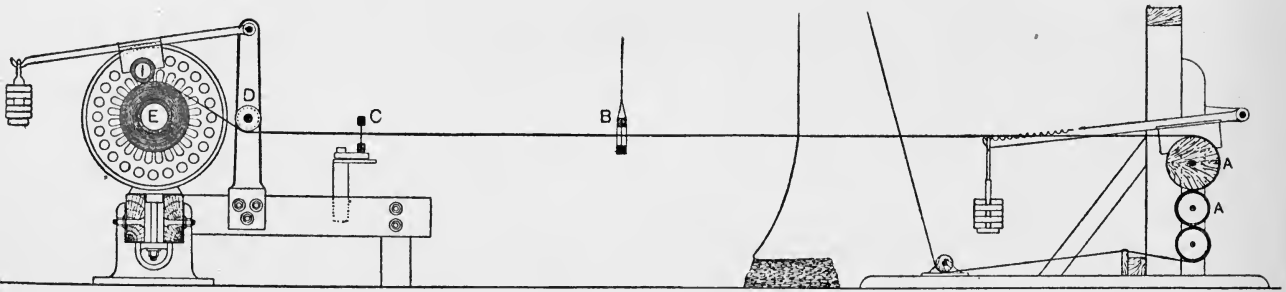

FIG. 33.

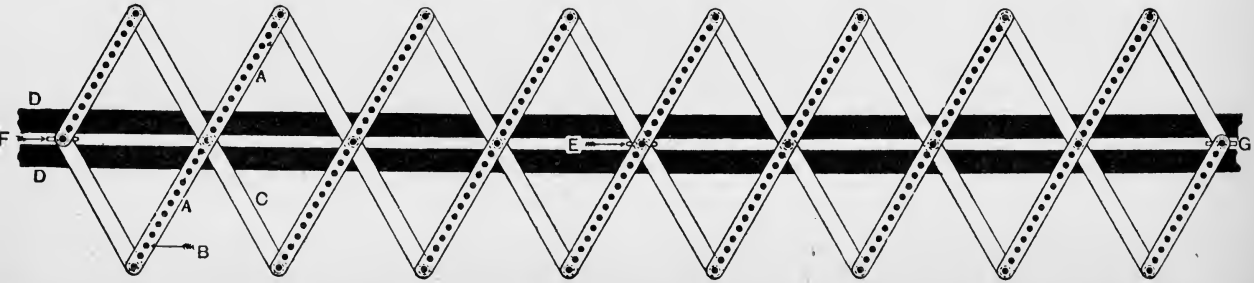

FIG. 34.

coarser setts are used where great varieties of warps are made. The evener C remains fixed throughout the process, and the threads of the warp are distributed as evenly as possible between the pins of this evener, so that the total width occupied is exactly the same as the width between the flanges of the weaver's beam. Evener B, on the other hand, is suspended by cords, and is swung backwards and forwards to unravel or open up the pinfuls of warp before they reach the fixed evener C, and thus prevent breakages. If it is desired, however, as is sometimes the case, to put a given chain on a narrower or a wider beam than that for which it was intended, it is necessary with this evener either to "cram" or to split up the pinfuls until the desired width is obtained. Either of these expedients generally results in an unsatisfactory beam. This difficulty, however, may be overcome by using a special evener similar to that shown in Fig. 34, which consists of a number of sections A in which the pins B are fixed. These sections are jointed together in the centre and at the ends to the connecting bars C, the whole resting in a slotted framework D, and capable of being expanded or contracted at will. By means of a thumb-screw E the centre of the evener may be adjusted to the centre of the beam, and the ends fixed to the required width by similar screws at F and G.

In the evener or wraith illustrated in Fig. 34 it is clear that either half may be extended or contracted at will without interfering with the other half. Although this may appear to be an advantage, it is usual to make these wraiths with a right- and a left-hand screw, in which case both halves move in or out simultaneously. Such a wraith is illustrated in Fig. 35, where the dark lines in A and B show diagrammatically the positions of the movable pins when intended to be used for a narrow and a wide width respectively. C

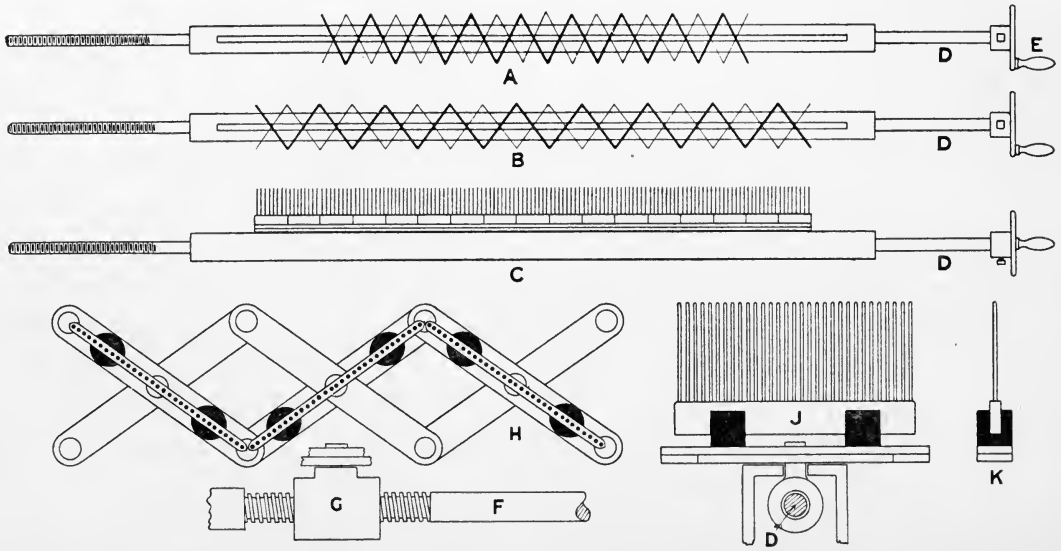

FIG. 35.

is an elevation representing the same width as B. The shaft D is supported at both ends at a convenient height for the threads and the beam, and the handle or wheel E is used for rotating the shaft, the centre part of which is made with right- and left-handed screws—one part F, together with the bearer G for the pins, being illustrated in detail. A plan of three of the rows is shown at H,

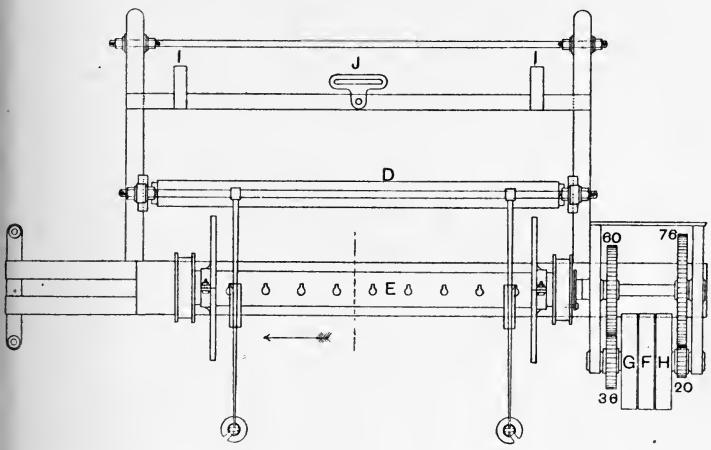

FIG. 36.

while a front view of one row with necessary parts, and an end view of one row, are supplied at J and K respectively.

As already stated, the eveners or wraiths guide the threads to their proper positions on the beam, but the beam itself is driven by the mechanism illustrated in Fig. 36, where F is a loose pulley, while pulleys G and H are compounded with driving pinions of 36 and 20 teeth respectively. The pinion of pulley G gears with a wheel of 60 teeth, and that of pulley H with a wheel of 76 teeth, thus giving a fast or slow motion to the beam as required.

Wheels and pinions of other sizes than those mentioned may, of course, be found in use. The fixed evener C, Fig. 33, is supported by the rests I and the slotted bracket J; the latter also permits of the evener's position being adjusted in relation to that of the beam.

Dressing and Beaming.—Dressing is the term generally used when speaking of the coating of the warp yarn with some adhesive substance while beaming. It is resorted to for various reasons, the chief of which is the laying of the loose fibres on the surface of the thread, thus reducing friction in the shedding, and facilitating the weaving operation generally. Other results incidental to this process are increased production in the spinning department, as yarns for dressing require less twist than those which are to be woven dry; waste is reduced to a minimum; the yarn being softer twisted, as well as starched, enables the cloth produced to take a superior finish and glaze. Most of these results may, however, be nullified by careless or inattentive drying. Over-drying weakens the yarn and makes it brittle, while under-drying has a tendency to produce mildew. A certain percentage of weight is added to the yarn: from 5 to 25 per cent in jute, while in some linens a higher percentage is often found. Where a high percentage of weight is desired special ingredients are introduced into the dressing mixture. It is, of course, understood that where the cloth has to undergo bleaching or dyeing, the warp of which it is composed must be treated with only that amount of size which is necessary to carry it successfully through the weaving process.

The materials in general use for the production of sizing mixtures may be classed as follows:—Adhesive substances, softening agents, deliquescent agents, antiseptic agents, and weighting agents. As a great variety

of each of these classes is in use, a list of each is appended, those most generally used being indicated by an asterisk :—

ADHESIVE.

* Wheaten flour .
* Farina or potato starch .
Rice flour .
Sago flour .
Maize flour .
Dextrine or British gum .
} Chief constituent of which is starch, $(C_6H_{10}O_5)_n$.

Irish moss, or Iceland moss.

SOFTENING.

* Tallow . . { A glyceride composed mostly of Tristearin, $C_3H_5(C_{17}H_{35}.CO.O)_3$. Tripalmitin, $C_3H_5(C_{15}H_{31}.CO.O)_3$. Triolein, $C_3H_5(C_{17}H_{33}.CO.O)_3$.

Bleached palm oil .
Castor oil .
Lard .
} Similar to above, but containing a larger proportion of triolein.

Glycerine, $CH_2(OH).CH.(OH).CH_2(OH)$, or $C_3H_5(OH)_3$.

Soaps . . . { Hard, $C_{17}H_{35}.CO.ONa$. Soft, $C_{17}H_{35}.CO.OK$.

Paraffin wax.
Resin.
Gloy (one of the many patent softeners).

The soaps should not be used when salts of the alkaline earths (calcium, strontium, barium, or magnesium) are present, nor when zinc chloride is used. All these react with the soap, and produce insoluble compounds. In fact, it is risky to use soap when any metallic salt is present, sodium and potassium excepted, these two forming probably the only soluble stearates; while wax should not be used in cloths which are to be bleached or dyed, as it cannot be removed by ordinary methods.

DELIQUESCENT.

* Magnesium chloride, $MgCl_2.6H_2O$.
Calcium chloride, $CaCl_2.6H_2O$.
Glucose or dextrose, $CH_2(OH).(CH.(OH))_4.CHO$, or $C_6H_{12}O_6$.
Glycerine, $CH_2(OH).CH(OH).CH_2(OH)$.
Zinc chloride, $ZnCl_2.H_2O$.

Magnesium chloride should be used sparingly when the cloth is to be finished on hot cylinders. The heat has a tendency partly to decompose the salt, in which case hydrochloric acid is produced.

ANTISEPTIC.

* Zinc chloride, $ZnCl_2.H_2O$.
Salicylic acid, $C_6H_4(OH).CO.OH$.
Phenol or carbolic acid, $C_6H_5(OH)$.
Mercuric chloride, $HgCl_2$.

The two latter are highly poisonous, and on this account are seldom used.

WEIGHTING.

* China-clay (decomposed felspar), $Al_2O_3(SiO_2)_2(H_2O)_2$.
Heavy spar (barium sulphate), $BaSO_4$.
Barium chloride, $BaCl_2.2H_2O$.
Epsom salts (magnesium sulphate), $MgSO_4.7H_2O$.
Glauber's salts (sodium sulphate), $Na_2SO_4.10H_2O$.
Talc or steatite, $H_2Mg_3(SiO_3)_4$.
Gypsum (calcium sulphate), $CaSO_4.2H_2O$.
Magnesium chloride, $MgCl_2.6H_2O$.
Zinc chloride, $ZnCl_2.H_2O$.

A few of the above compounds have more than one property; they are, therefore, mentioned in more than one class.

Sizing mixtures are so varied in character and object,

and opinions are so different as to the benefits derived from any special compound with respect to its application to similar warps, that it is impossible to give more than a very general indication as to how they should be composed.

In the jute trade special loading agents are seldom employed, the dressing mixtures being generally restricted to the common adhesive substances (farina and wheaten flour), with the addition of some softening material (tallow or oil), and an antiseptic (invariably zinc chloride). This being so, the mixtures are very simple in character, and the proportions of farina or flour, or of both combined, to that of water vary between one-quarter of a pound to one pound per gallon, just as the dressing is desired light or heavy, the proportions of materials used, irrespective of water, being approximately :—

Farina or flour	90 per cent.
Softening agent	5 to 8 „
Antiseptic (when flour is used) .	2 to 5 „

It is usually considered unnecessary to use an antiseptic where farina is the only adhesive substance used, but it is a distinct advantage to add about $\frac{1}{4}$ per cent of caustic soda to pure farina size, since this not only preserves the proper consistency of the dressing for many days, but increases considerably the strength and thickness of the paste; if no caustic soda be added, farina size turns watery in a short time. Although no antiseptic is needed, zinc chloride is often introduced into such mixtures to fulfil the double purpose of a deliquescent and weighting agent.

The dressing mixtures for linen (where simple dressing is required) are similar in composition to the above, with perhaps the addition of from 5 to 10 per cent of a

deliquescent agent such as chloride of magnesium. Where loading is desired, either one or other of the agents mentioned may be introduced in the necessary proportion. Where the adhesive substance is farina alone, the mixture should not be boiled, but simply raised to boiling-point. The same remarks apply where flour is used, although in some cases it is considered preferable to boil a dressing of this kind. In any case the flour should first be allowed to ferment, as fermentation reduces its tendency to produce mildew. Fermentation may occupy anything from ten days to many weeks. In flour dressings, soap may be employed with advantage as the softening agent, for the alkali it contains not only dissolves the fats present, but also neutralises the acid developed in fermentation. Farina is best alone where the yarns are bleached or coloured, as it forms a transparent film on the yarn; but it is of little use where weighting is desired, since it contains no gluten to carry the weighting agent. On page 75 we give in tabular form particulars, which have been derived from various sources, of several sizing mixtures in actual use. In each case the percentage of loading expected or obtained is stated, and, for the sake of comparison, all the ingredients used have been reduced to a basis of 100 lbs. of adhesive substance. Such a table, besides supplying the data given, also shows the great absence of uniformity and apparent want of principle which obtains in this important section of the weaving industry, and suggests a wide field of investigation for the textile chemist.

% Loading.	Wheaten Flour (lbs.).	Sago Starch (lbs.).	Farina Starch (lbs.).	China Clay (lbs.).	Tallow (lbs.).	Wax (lbs.).	Zinc Chloride 102° T.	Magnesium Chloride.	Caustic Soda 70° T.	Aniline Blue.	Water (Gallons).	Remarks.
Pure size	100	...	...	...	10	...	1 gall.	...	1 pint	...	80	Flour to be previously steeped with 1¼ galls. of Zn. Cl.$_2$, 102° T. added for every 100 lbs. of flour.
,, ,,	50	50	...	...	10	...	...	...	1 ,,	...	80	
,, ,,	...	...	100	...	5 to 10	...	...	...	1 ,,	...	150 to 200	
10%	100	...	...	...	2½	1½	3½ lbs.	...	...	...	...	
10%	...	...	100	...	...	10	...	...	...	...	100	
20%	60	10	30	15	10	1	5 lbs.	...	...	...	...	
20%	100	...	...	30	2½	...	5 lbs.	...	...	¼ oz.	...	
20%	...	...	100	22	...	12½	5 lbs.	...	...	¼ oz.	...	
30 to 40%	100	...	...	80	10	...	...	2 gall. 60° T.	...	...	35	Flour previously steeped as above.
50%	100	...	...	45	12	...	3 lbs.	4 lbs.	...	...	30	ditto.
50%	100	...	...	60	20	...	7½ lbs.	6½ lbs.	...	...	...	
50%	85	15	...	80	35	...	10 lbs.	27½ lbs.	...	...	...	
80 to 100%	88	...	12	250	33	...	¼ gall.	5 gall. 60° T.	...	...	22	ditto.
100%	100	...	...	120	25	...	10 lbs.	12 lbs.	...	½ oz.	...	
100%	82	18	...	160	36	...	18 lbs.	36 lbs.	...	...	...	
100%	100	...	...	135	27	...	6½ lbs.	9 lbs.	...	½ oz.	...	

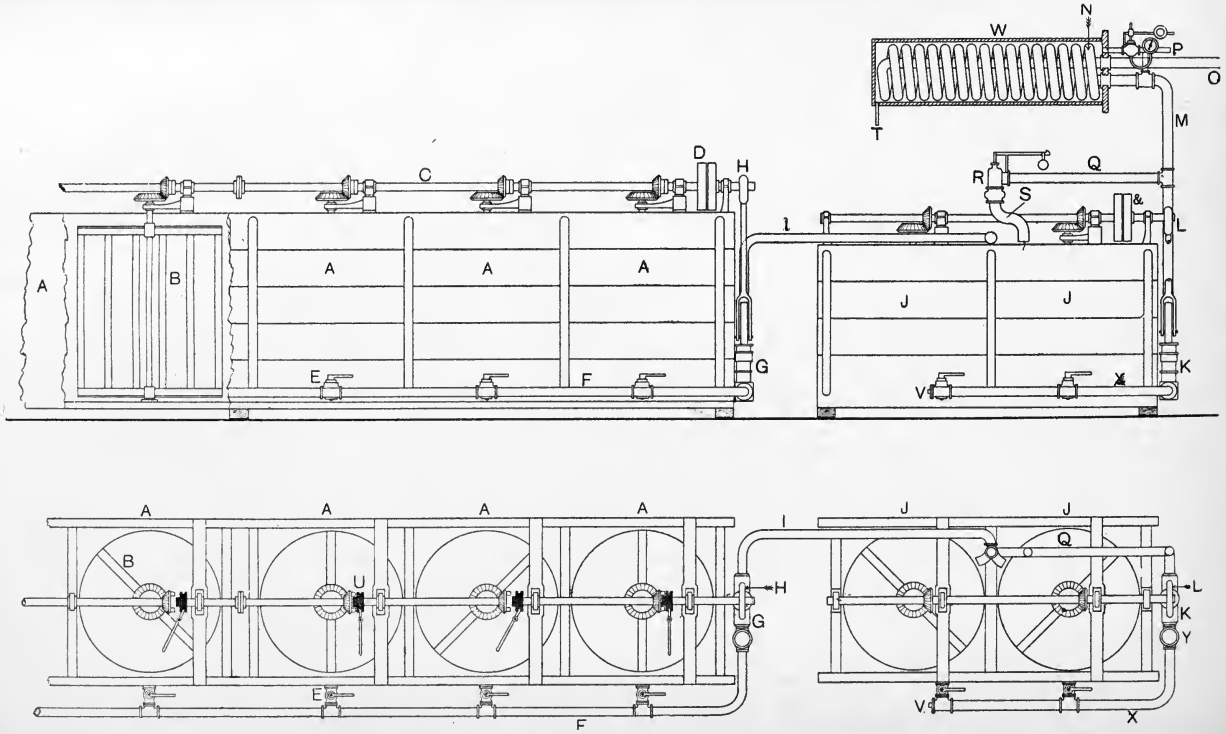

Fig. 37.

Figs. 37 to 40 are illustrative of a full starch mixing apparatus as made by Messrs. Joseph Hibbert and Co., Darwen, Lancashire. The fermenting vats A shown in plan and elevation in Fig. 37 are each provided with agitators B. The latter receive motion from a shaft C through bevel wheels and pinions as shown. Each agitator may be brought into action at will by means of the clutches U. Vats A are connected by means of brass taps E and copper piping F to a brass ram pump G, which is worked by the eccentric H on the shaft C. When in action the pump draws the fermented mixture from vats A as required, and discharges it through pipe I into either of the mixing and diluting vats J. These are provided with agitators, taps, and piping similar to vats A. The pump K forces the diluted mixture through the pipe M into the coil N, which is enclosed in steam-chest W; the mixture, after having passed through coil N, leaves the coil by means of pipe O, which is connected by copper piping to the starch boxes of the dressing machines. Steam, at from 5 to 10 lb. pressure, is admitted to W through pipe P and a reducing valve. The condensed steam is allowed to pass off at T, which is connected to a steam trap. Between K and the coil N an overflow valve is provided at R, which allows of the return through pipes Q and S of all superfluous supply.

Fig. 38 is an end elevation of the diluting vat J and steam-chest W. Between the pipe X and pump K is a brass tap Y, shown in detail in Fig. 39. It is provided with a sieve A, through which all size must pass. When in action, this sieve is opposite the inlet B, and thus arrests all foreign matter, which may be removed when the sieve is turned in the position shown. At Z, Fig. 38, an extra tap is placed to take up back pressure of the size when the

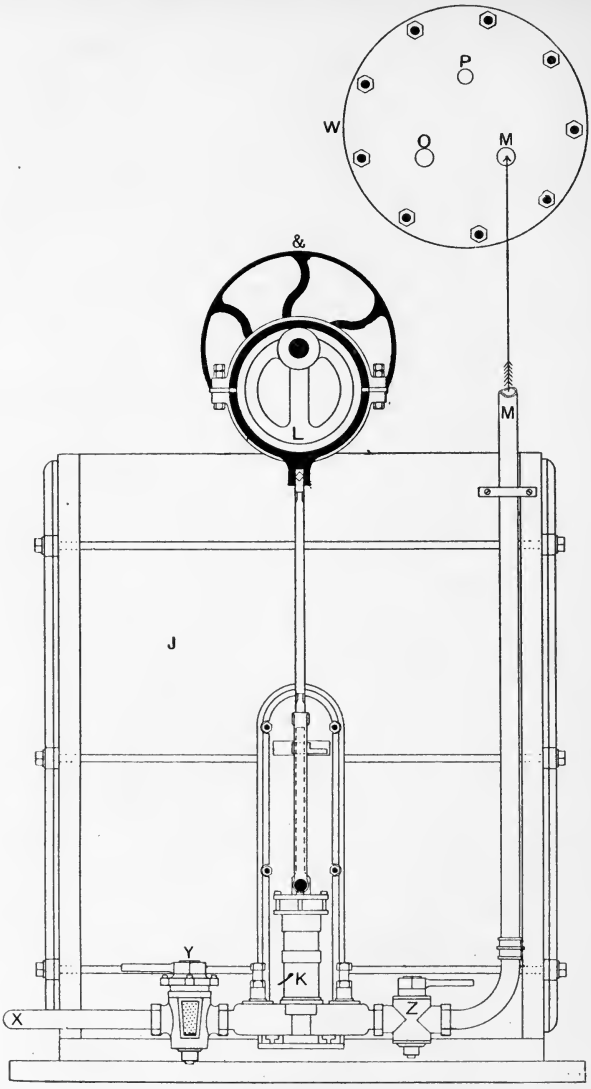

Fig. 38.

machine is not in use. For pure farina dressings all parts to the left of J, Fig. 37, are unnecessary. The full plant suitable for from ten to fourteen dressing machines consists of six fermenting vats A, of which only four are shown, one being in section.

For some classes of cheap goods, and especially where thick, soft, twisted cotton warps are used, an additional tank I, Fig. 40, is necessary if excessive weighting is

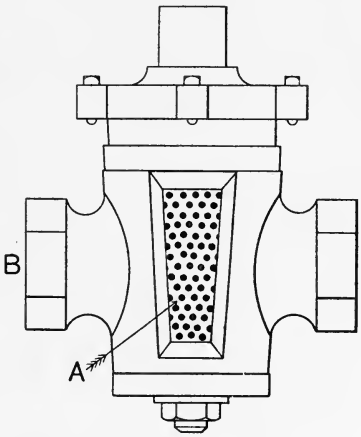

FIG. 39.

desired. When in use it occupies a position preferably immediately over vats J, Fig. 37. It is provided with an open boiling steampipe, and also with agitators attached to the shafts G and H, which are rotated by the shaft B through bevel pinions and wheels C, D, E, F. The mixture, when required, may be run into the mixing vat through J and K. To regulate the supply of mixture to the starch-box of the dressing machine an automatic feed is sometimes introduced as illustrated in Fig. 41. It consists

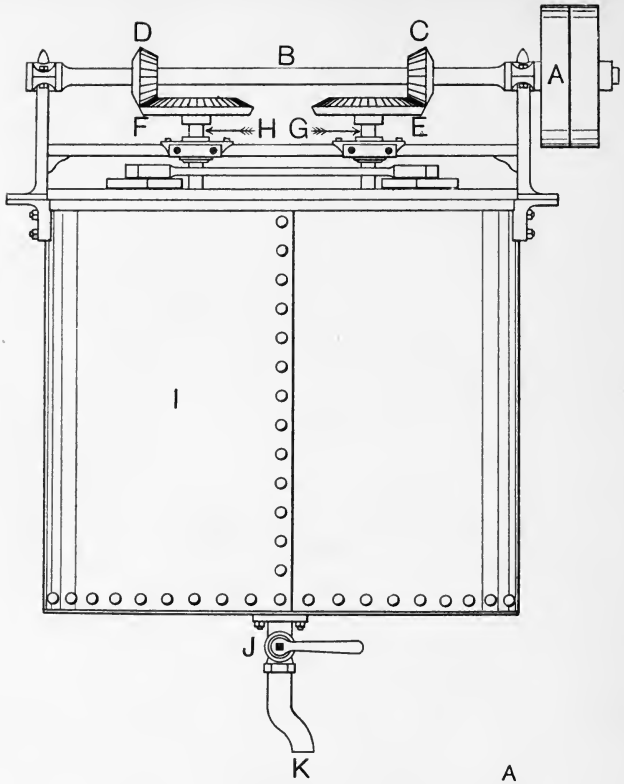

FIG. 40.

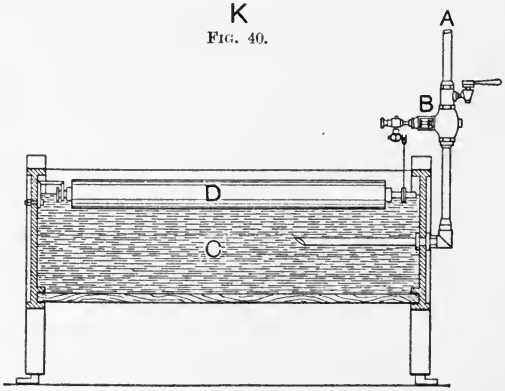

FIG. 41.

of a floating copper cylinder D, which is supported by the starch C, and opens or closes the valve B on the supply pipe A as the starch in the box falls or rises.

For jute yarns, the operations of sizing, drying, and beaming are carried on simultaneously by a dressing machine similar to that shown in Figs. 42 to 46, which are representations of different parts of the machine made by Messrs. Robertson and Orchar, Limited, Dundee. Fig. 42 shows in plan and elevation a six-cylinder machine (they may also be made with four or eight cylinders as required). A shows the line of the warp as it passes from >-shaped banks—one at each end of the machine—to the loom beam B. Spools or bobbins equal to half the number of threads required for the warp are placed in each bank, their ends passed through a reed at C (two ends in each split), then between the starch roller D and pressing roller E, the latter being weighted as shown. They are then passed through a guide reed at F, round the guide roller G, and then on to the drying cylinders H, being passed round these as indicated by the arrows. Between E and F the yarn is usually split thread by thread by a lease rod, to prevent the threads being dried together in pairs; occasionally reeds set with inclined wires instead of vertical wires, and termed angle reeds, are used for the same purpose. After leaving the cylinders, the yarn is guided by rollers I to the yarn beam, as shown, and is firmly pressed thereon by the deadweight of the pressing rollers J, and the massive framework carrying these between the framing proper of the machine. By means of an ordinary rack-and-pinion arrangement the pressing rollers and framework may be raised clear of the beam when necessary, and retained in this position by the ratchet wheel K, on the rack-wheel shaft, and the retaining catch L. This motion

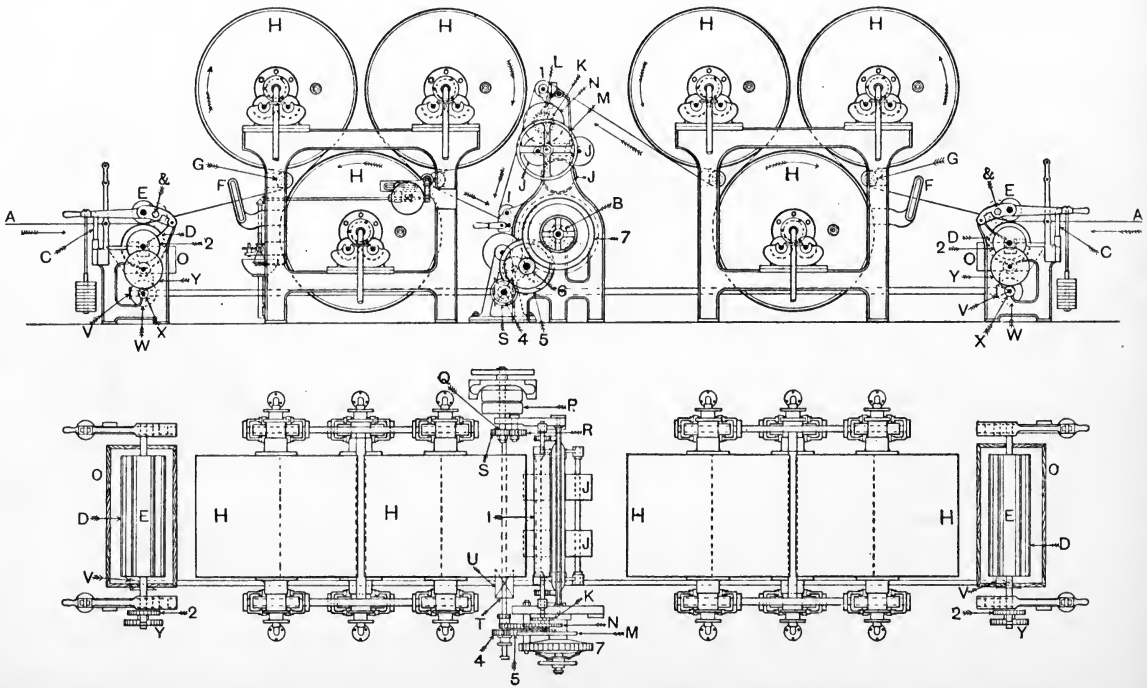

FIG. 42.

is actuated by the hand wheel M, compounded with which is a small pinion gearing with the toothed wheel N, on the end of the rack-wheel shaft.

The dressing mixture is preferably conveyed from the mixing tanks by copper pipes direct to the starch-box O, in which the starch roller D—usually copper-covered—revolves. The yarn may be kept in contact with the starch for a longer time by removing the roller E and placing it in bearings &; or a rod, adjustable if desired, may be placed near the bottom of the trough, and extending from end to end, under which the yarn may be passed before bringing it to the rollers, thus allowing the starch plenty of time to penetrate into the yarn. The pace of the yarn is determined by the surface speed of the starch roller D, which by the aid of the pressing roller E draws the yarn from the banks at a uniform speed. The drive of the starch roller D, and also that of the loom beam, is illustrated in plan and elevation in Figs. 43 and 44.

Driving pulley P = 400 revolutions per minute.
Change pinions Q = 19, 22, 26, 30, 36, and 42 teeth.
Intermediate wheel R = 34 teeth.
Wheel S on driving shaft = 42 teeth.
Bevel pinion T on driving shaft = 25 teeth.
Bevel wheels U on side shaft = 40 teeth.
Bevel pinion V on side shaft = 20 teeth.
Bevel wheel W on cross shaft = 40 teeth.
Spur pinion X on cross shaft = 22 teeth.
Intermediate wheel Y on stud = 72 teeth.
Intermediate pinion Z on stud = 29 teeth.
Spur wheel 2 on starch roller D = 40 teeth.
Starch roller (over copper) = 13 in. diameter.

The speed is therefore found as follows :—

$$P \times \frac{Q}{S} \times \frac{T}{U} \times \frac{V}{W} \times \frac{X}{Y} \times \frac{Z}{2} \times \frac{D\pi}{36 \text{ ins.}} = \text{yards per minute,}$$

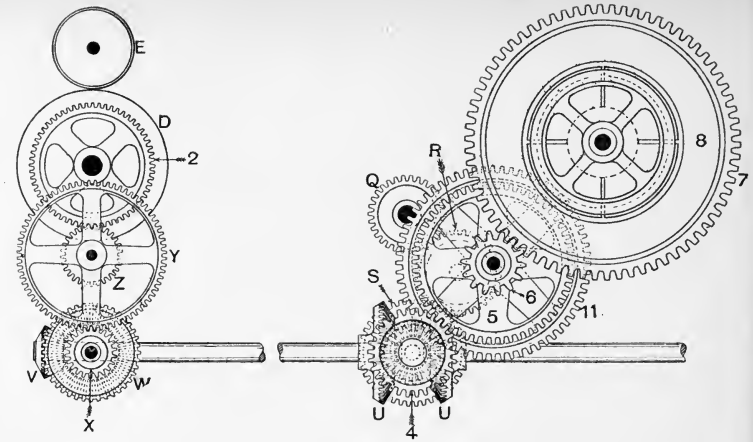
E
D
2
Y
Z
V
W
X
R
Q
S
8
7
6
5
11
U
4
U

FIG. 43.

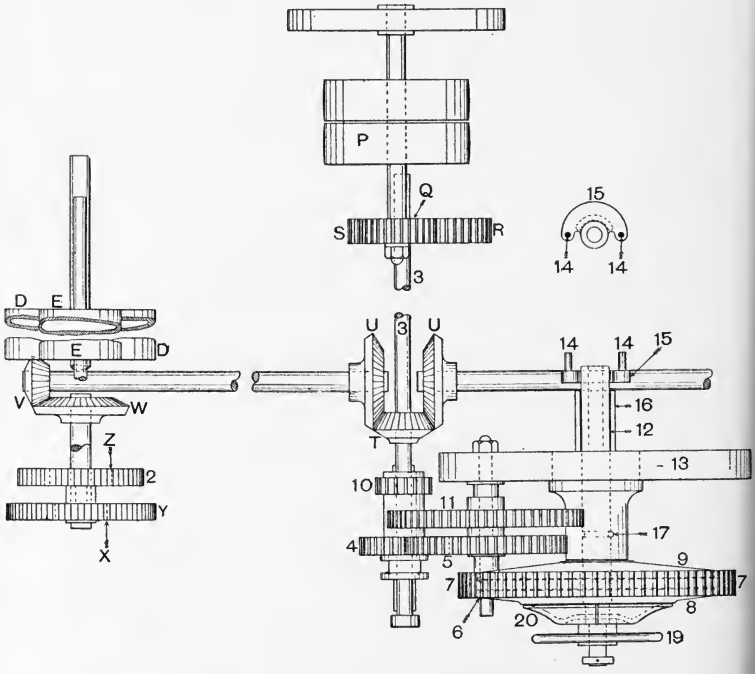
P
Q
S
R
3
15
14
14
D
E
E
D
V
W
Z
2
Y
X
U
3
U
14
14
15
16
12
T
13
10
11
17
4
5
9
7
7
8
6
20
19

FIG. 44.

the numerical values in above being :—

$$400 \text{ revs. per min.} \times \frac{19}{42} \times \frac{25}{40} \times \frac{20}{40} \times \frac{22}{72} \times \frac{29}{40} \times \frac{13 \text{ ins. dia.} \times 3{\cdot}1416}{36 \text{ ins.}} = 9{\cdot}46 \text{ yds. per min.}$$

The speed with 22 change pinion = 11 yds. per minute.

,,	26	,,	= 12·9	,,
,,	30	,,	= 14·94	,,
,,	36	,,	= 18	,,
,,	42	,,	= 20·93	,,

For some classes of work the latter speed is often attained and even exceeded in practice.

In cases where a large variety of work requires to be dressed on the same machine, necessitating different speeds, the advantage of obtaining these by means of a simple change pinion will be readily appreciated. Where, however, the class of work seldom varies, the pulley P may be keyed on the driving shaft 3. When this latter arrangement obtains, a variation in speed can only be got by the introduction of a stepped cone drive. The loom beam is driven as follows :—

Pinion 4 on shaft 3 = 30 teeth.
Stud wheel 5 = 56 teeth.
Stud pinion 6 = 14 teeth.
Friction wheel 7 = 70 teeth.
Diameter of beam = $5\frac{1}{2}$ ins.

$$\text{revs. per minute of P} \times \frac{Q}{S} \times \frac{4}{5} \times \frac{6}{7} \times \frac{D\pi}{36 \text{ ins.}} = \text{yards per minute,}$$

numerically :—

$$400 \times \frac{19}{42} \times \frac{30}{56} \times \frac{14}{70} \times \frac{5{\cdot}5 \text{ ins.} \times 3{\cdot}1416}{36 \text{ ins.}} = \frac{9{\cdot}33 \text{ yds.}}{\text{per min.}}$$

It will be observed that this speed is slightly less than that of the starch roller, and it is claimed for this arrangement that the strain upon the yarn at the start of a new

beam is not so great as if the speeds were equal. In many machines, however, the speeds at the start are the same. As the speed of the starch roller is uniform throughout, and as the surface speed of the beam increases as it fills, a driving arrangement (consisting of friction wheel 7 and friction plates 8 and 9) is introduced to allow the necessary slip of the beam to take place. As the beam fills, this slip increases to such an extent that special parts are introduced whereby the speed of the friction wheel 7, and therefore the slip of the friction plates 8 and 9, can be reduced when the beam has reached between 11 and 12 ins. diameter. The driving pinions 4 and 10 are compounded, and can be moved freely endwise on driving shaft 3, by means of an ordinary clutch fork, until the pinion 4 be withdrawn from gear with the wheel 5, and pinion 10 of 18 teeth placed into gear with the wheel 11 of 68 teeth. The speed of the beam is then reduced as follows:—

$$\frac{30}{56} : \frac{18}{68} = \text{one revolution} : \frac{42}{85} \text{ revolution, or practically one-half.}$$

Shaft 12, to which the friction plate 9 is keyed, is continued inside the framework 13 as shown, its inner end being hollow to receive and support the beam arbor, while the pins 14, fixed in the sector plate 15 (an inverted end elevation of which is shown in the detached figure), engage with the beam head and rotate it. The dotted lines in the detached figure indicate the end of a bracket 16 supporting the shaft 12 from underneath, which prevents the shaft 12, and therefore pins 14, from being withdrawn from the beam, except when plate 15 is in a position diametrically opposite to that shown. A groove is turned out of shaft 12 to receive a pin 17, which prevents the accidental withdrawal of pins 14 from the beam. When the latter is

filled, pin 17 is withdrawn, plate 15 is turned in the proper position, and the whole is drawn forward until the beam arbor is clear of shaft 12.

Fig. 45 is a sectional plan showing in detail the frictional driving arrangement. On shaft 12, which gives motion to the beam as already described, plate 9 is keyed, and its nave lengthened to receive the friction plate 8 and the wheel 7. The plates 8 and 9 are keyed together by the sliding key 18, but wheel 7 revolves freely between them. Provided the parts mentioned are in the position shown, the wheel 7 would revolve without imparting motion to the shaft 12. But by means of the hand wheel 19 and spring plate 20, frictional contact of any degree may be obtained between wheel 7 and plates 8 and 9, thus rotating the shaft 12. To ensure this, it is customary to place flannel washers between the wheel 7 and plates 8 and 9.

These washers are usually freely lubricated with powdered black lead because of the great amount of slip which necessarily takes place between the plates 8 and 9, and the wheel 7 at certain stages in the filling of the beam. As this slip increases in proportion to the increasing diameter of the loom beam, it is almost natural to conclude that the frictional contact between the plates and the wheel should be reduced. On the contrary it must be gradually increased, since the increase in the diameter of the beam gives the yarn an increased leverage or pull over the beam and its drive, which must be counteracted by a gradually increased frictional contact through the medium of wheel 19 and spring plate 20.

The measuring and marking motion is shown in detail in Fig. 46. A again indicates the line of the warp as it passes over the cylinders B, which are all supported on anti-friction rollers C; the supports of the latter, and also

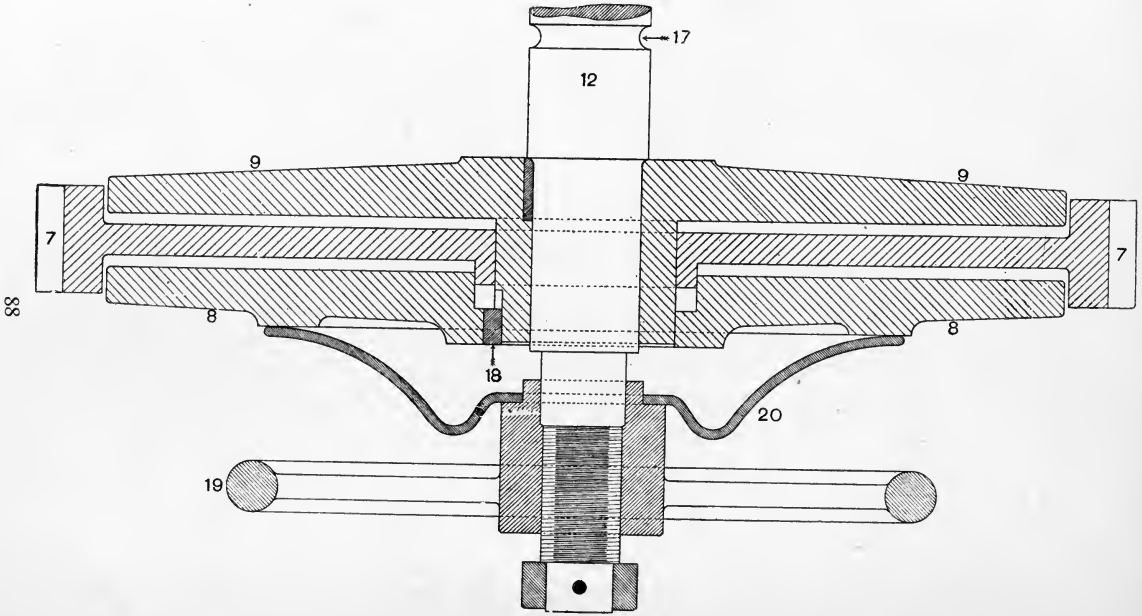

FIG. 45.

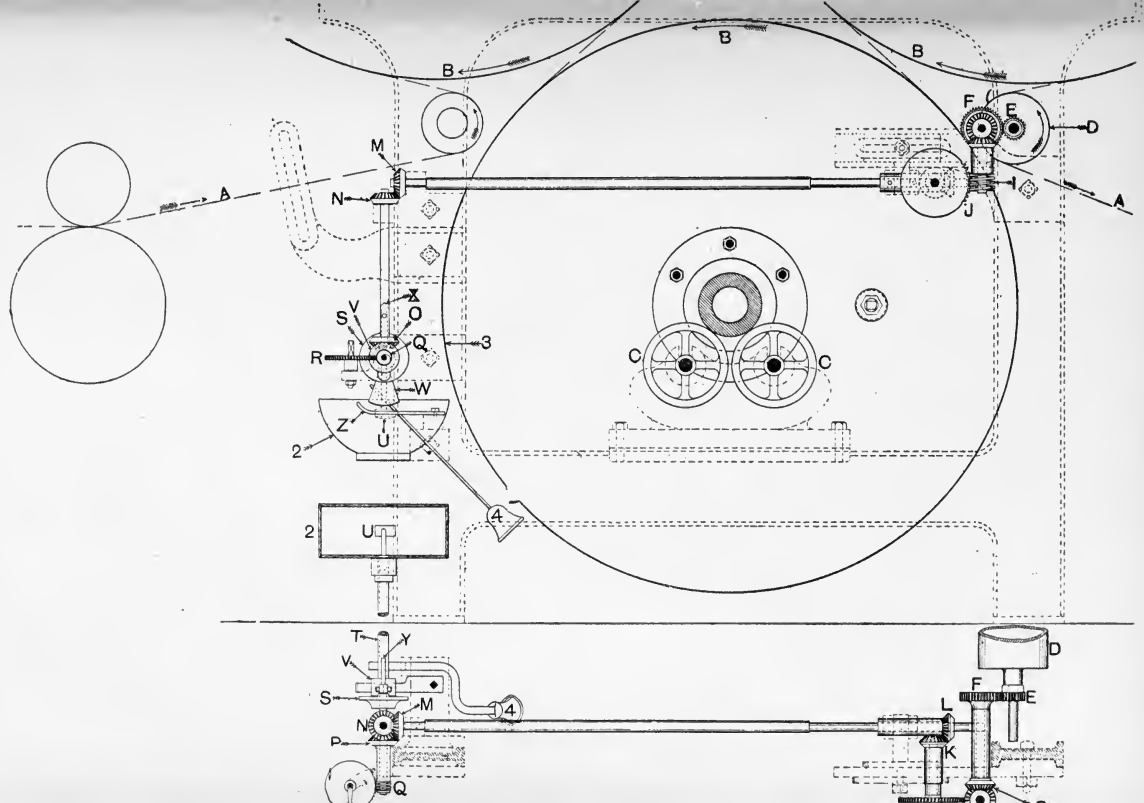
A
B
B
B
M
N
F
E
D
J
I
A
S
V
X
O
Q
R
3
W
Z
U
2
C
C
2
U
4
T
Y
V
S
M
N
P
Q
4
D
F
E
L
K

the framework proper, being indicated by dotted lines. The guide and measuring roller D, 18 ins. circumference, is rotated by the yarn, and it is obvious that in two revolutions of D 1 yd. of yarn will have passed over the machine. As the counter wheel J contains the same number of teeth as it is desired to have yards of yarn in the cut, the object of the gearing is to move the wheel J one tooth every two revolutions of the roller D. This is accomplished by the following wheels :—

Pinion E on shaft D = 22 teeth.
Stud wheel F = 44 teeth.
Stud bevel wheel G = 24 teeth.
Bevel wheel H on vertical worm shaft = 24 teeth.
Single thread worm I gearing with counter wheel J.

Two revolutions of E will give one revolution of F, and as G and H are equal, one revolution also of the worm I, and wheel J will be advanced one tooth, while one revolution of J will equal one cut length.

By means of equal bevel wheels K, L, M, N, O, P (twenty-four teeth each), and worm wheel Q, the worm wheel R is advanced one tooth for each revolution of J, thus registering the number of cuts on the beam. It is necessary, however, that each cut length be marked at the proper point for cutting when woven. Keyed on the shaft of the worm Q is a disc S, provided with a projecting part at one point of its periphery. On the same shaft is a sleeve T carrying at one end a marking pad U, and at the other end a boss V, a weight W, and fingers X and Y, the whole moving in unison, and therefore retaining their relative positions. As disc S revolves, its projecting part, when about 25° from the bottom, comes into contact with and carries upward the weight W. When the projecting part reaches within 25° of the top, the

finger X bears on the spring Z, and continues to do so until the point of Z is reached. By this time the weight W and marking pad U have passed the vertical position, and therefore fall immediately X clears Z. In falling, pad U (carrying colour from colour-box 2) is adjusted to strike the yarn on cylinder B about point 3. The finger Y actuates the bell 4 slightly in advance of the marking motion.

Fig. 47 (part in longitudinal section) shows the construction of a steel cylinder, diameter 4 ft., and intended for a maximum working pressure of 40 lbs. per square inch. Steam from a reducing valve is admitted by the pipe A, and a steam-tight joint is obtained by means of the ordinary glands B and packing as shown. A syphon arrangement at C serves to rid the cylinder of condensed steam, while waste of effective steam is prevented by a steam trap connected to the exhaust pipe of each cylinder. Atmospheric valves are, of course, fitted in all cylinders to prevent the creation of a vacuum and possible collapse of the cylinder. In cylinders where stay rods are necessary, the condensed steam is removed by revolving scoops attached by conducting pipes to the exhaust pipe proper.

In the dressing of jute and of the heavier linen yarns it is invariably the practice to run the yarn direct from the bank to the loom beam, as already described. In these cases it is, of course, necessary to have banks or creels of a capacity in the aggregate equal to the total number of threads in the warp. Where, however, as in the finer linen fabrics, the number of threads in the warp exceeds the capacity of the largest banks in general use, it becomes necessary to run the yarn on warping beams, each of which may contain one-half, one-quarter, one-sixth, or other suitable portion of the total threads required. For

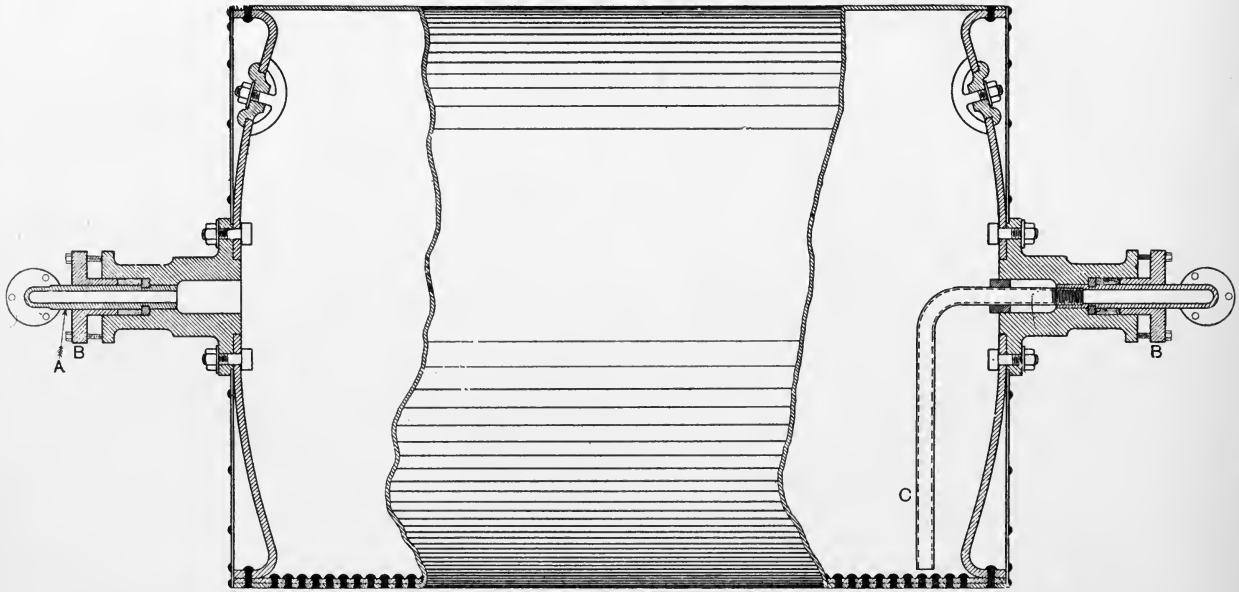

FIG. 47.

example, a warp of 3000 ends may be warped either in four sections of 750 ends, six sections of 500 ends, or even eight sections of 375 ends each; either of the two latter ways being in most cases the more probable. The particular number, however, depends greatly upon the amount of yarn to be used, and also upon the selection of the most convenient number of leas or cuts per bobbin for the required length; the latter reason must be observed for comparatively short lengths, say up to 30 or 40 pieces, as the production of the winding department and the minimising of waste depend largely upon this. The capacity of the bobbin bank or creel may reach in exceptional cases 1000 bobbins (600 to 800 being the usual limits), but the best and most economical results are obtained when the number of bobbins in use does not exceed 500. Six warping beams would therefore suit the above example, were the 3000 ends ultimately to go on one weaver's beam, since three warping beams could be placed at each end of the dressing machine. If, however, the loom beam were required in two sections owing to the width of the web (those above 60 ins. wide are usually in two sections), it would be advisable to warp half the total threads on four warping beams, each one of which would contain double the length required for one loom beam, and all four utilised for each section of the loom beam, two at each end of the dressing machine. By doing this the number of bobbins would also be well within a practical limit.

Figs. 48 and 49 show respectively the side and front elevations of the warping machine made by Messrs. Robertson and Orchar, Limited, Dundee, one-half of the bobbin bank or creel being indicated in elevation and plan at A in the former figure. The ends from the various

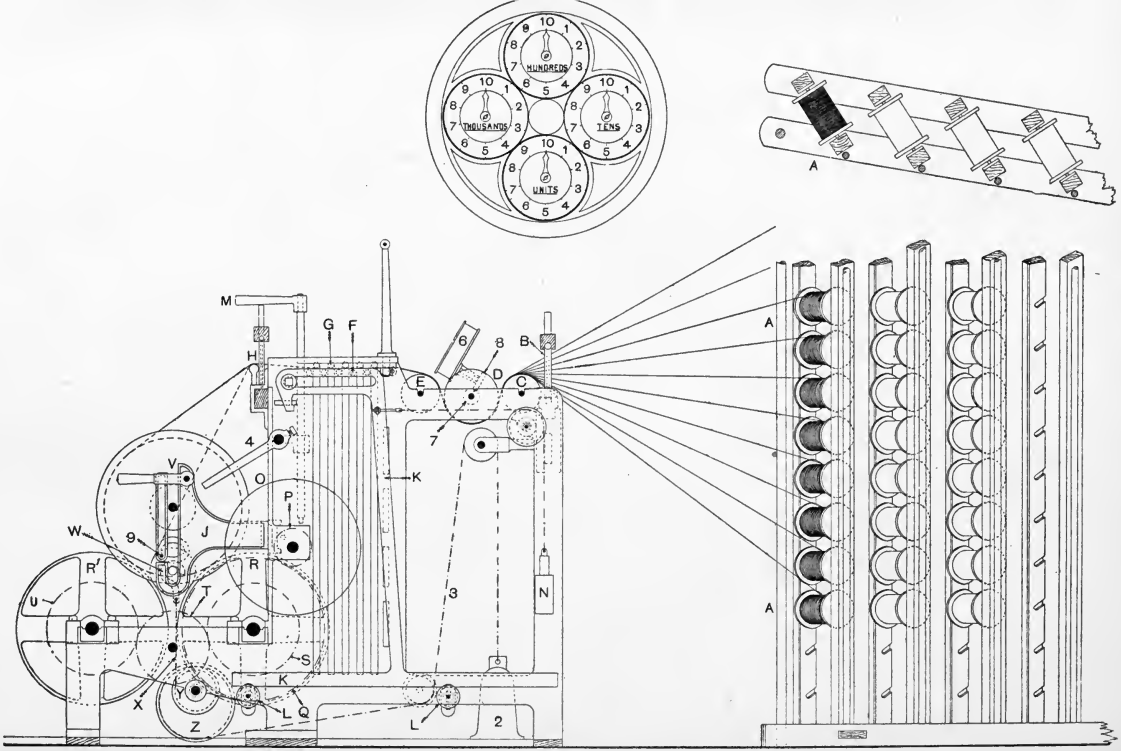
HUNDREDS
THOUSANDS
TENS
UNITS
A
M
G
F
H
E
6
8
B
D
C
4
7
V
O
K
P
W
9
J
R'
R
T
3
N
u
S
K
X
L
Q
Z
L
2
A
A

FIG. 48.

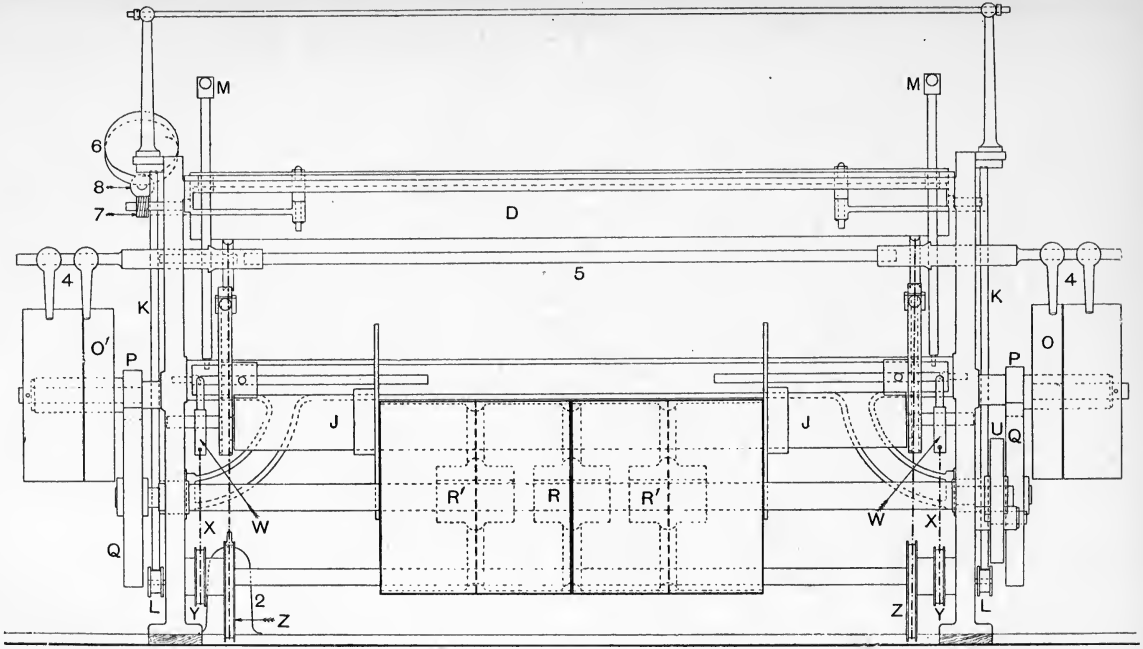

FIG. 49.

bobbins being first passed through a guide reed B, are taken over a guide roller C, then partially round the measuring roller D, and again over a second guide roller E. They are then taken alternately over and under a series of rods F and G, are passed through a second or leasing reed H, and finally attached to the beam J. In some machines the reed H is an expanding one, so that whatever number of threads are in the bank, they may be readily arranged to occupy the exact width between the flanges of the warping beam or reel. Rods F—those under the yarn—are fixtures in the framework, but rods G—above the yarn—are capable of falling one by one in their respective guide slots in the framework, in order to take up slack yarn when it becomes necessary to unwind the beam to "piece" broken or run-out ends. Under ordinary circumstances these rods are supported clear of the yarn by two frames K which rest on flanged guide pulleys L, but which are caused to move from under the rods, as the beam J begins to unwind, by means of a cam or other suitable connection actuated from the "set-on" handle M. Frames K are gradually moved forward again by means of counterpoise weight N as the yarn is rewound, and consequently the rods G are lifted.

Beam J is driven forward in the following manner. Compounded with pulley O—which, however, revolves loosely upon its central stud—is a driving pinion P of 24 teeth. This gears with and drives spur wheel Q of 90 teeth keyed on the arbor of the frictional driving drum R of 16 ins. diameter. From this arbor a similar motion is imparted to the 16-in. driving drum R^1 by wheels S and U, 70 teeth each, and intermediate wheel T of 56 teeth. The beam J rests upon and is frictionally driven by the rotary movement of drums R and R^1, the surface speed of the beam,

when no allowance for slip is made, being that of drums R and R^1. As the beam fills it gradually rises in a vertical plane, the beam arbor being guided in its vertical movement by means of the slots V in the framework. The front portion of this slot is jointed at 9, and folds down to facilitate the transfer of full and empty beams. Sufficient grip or friction is generated between the beam J and drums R and R^1 for driving and pressing purposes by means of hooks W and strap X attached to pulley Y. Compounded with Y is a second and eccentric pulley Z, to which a weight 2 is attached by a chain 3. It will be observed that as the beam rises and gradually gains in weight, the eccentric pulley Z gradually presents its thin face to the chain 3, reduces its leverage, and therefore reduces the effect of weight 2 proportionately.

Unwinding or winding back is accomplished by means of a crossed belt running on driving pulley O^1 at the opposite side of the machine. Belt forks 4 are so situated on the fork rod 5 that it is impossible for both belts to be on the inside or driving pulley at the same time. Driving drums R and R^1 are arranged to overlap so that no portion of the yarn may be unsupported. The length warped or run upon the beam is registered by means of a clock 6, an enlarged view of the face of which is shown at the top of Fig. 48. Measuring roller D is 18 ins. in circumference if measuring in yards ($22\frac{1}{2}$ ins. if measuring by ells of 45 ins.), and has keyed upon its arbor a single thread worm 7 which gears with and drives a worm wheel 8 of twenty teeth fixed on the axle of the units hand or pointer. Twenty revolutions of the roller D, or 10 yds., will therefore cause this hand to make one revolution. The movement is carried to the other hands and suitably reduced by simple gearing inside the clock. Since the beam is driven from

drums R and R^1 by rolling contact, it is obvious that the velocity of the yarn will be constant throughout. This velocity at 70 revolutions per minute of the driving pulley O will be $\frac{70 \text{ revs.} \times 24 \times 16 \text{ ins.} \times 3{\cdot}1416}{90 \times 36 \text{ ins.}} = 26{\cdot}0636$ yds. per minute when no allowance for stoppages or slip is made. This speed is considerably increased for certain classes of yarn, and a speed of 60 to 70 yds. per minute is not uncommon in the linen trade.

The necessary number of warping reels or beams having been warped, they are placed in the standards or frames at each end of the dressing machine proper. These, in the case of linen, may or may not be fitted with steam drying cylinders, it being unusual to apply heat to the finest linen yarns in this manner. Figs. 50 to 52—in which the letters and numerals refer to the same part—illustrate a linen dressing machine of the latter type as made by Messrs. William Smith and Brothers, Limited, Heywood. The plan and elevation are shown in Fig. 50, where A, A, A, A are the warping beams in standards, as already mentioned, a similar number — four — being of course situated at the other end of the machine. The ends of the yarn B from each of the reels A first pass through the reed C, then over the guide roller in adjustable bracket D, and then between pressing and starch rollers E and F, both of which are covered with flannel, and the latter supported on the anti-friction roller G, and revolving in the starch box H. After leaving E and F the yarn is deflected by roller I on to the top of the brush J, which revolves in the opposite direction to that in which the yarn travels. From roller I the yarn in its passage through the reeds K is split by rods L into two equal

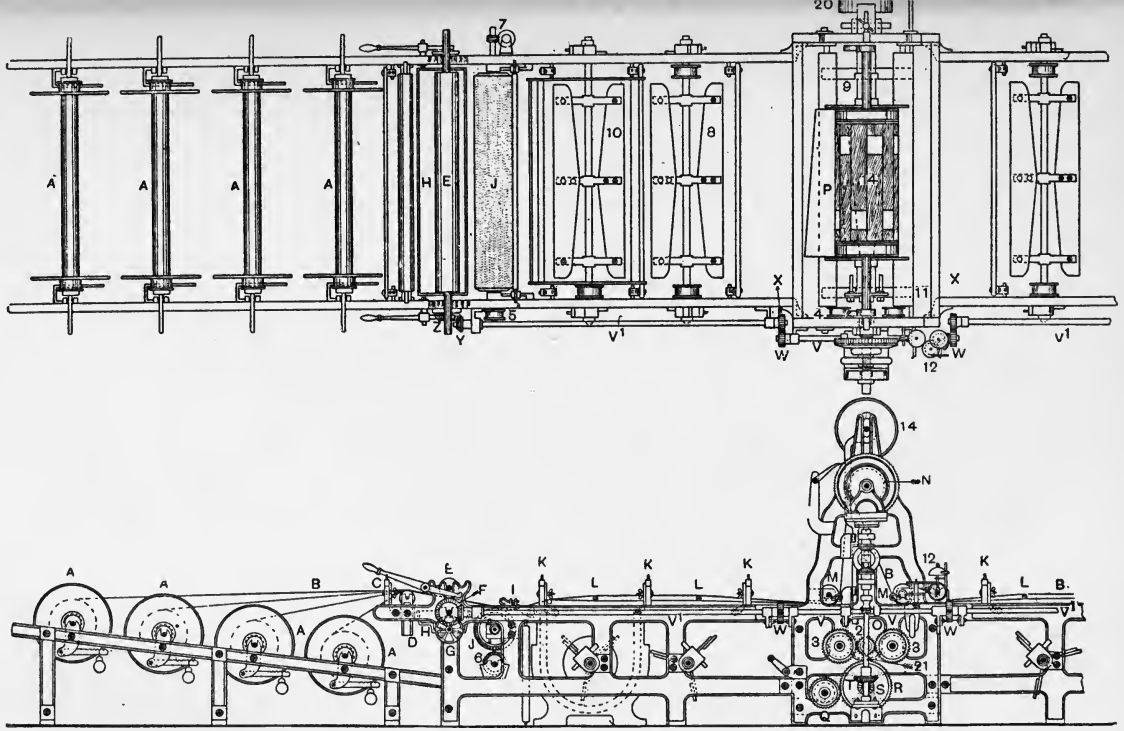

FIG. 50.

layers to facilitate drying. It then passes under the guide roller M to the loom beam N, as shown.

The starch roller F—the surface speed of which regulates the speed of the yarn—is driven as follows :—The cone pulley O on the driving shaft is connected with and drives by means of a belt, cone pulley P, on the shaft of which is the driving pinion Q which gears with spur wheel R compounded with bevel pinion S, the latter in turn imparting motion to the bevel pinion T on the vertical shaft 21. On the same shaft is a worm U which gears with and drives a worm wheel on the short side shaft V, at the end of which pinion W drives pinion X of equal teeth on the long side shaft V^1. The bevel wheel Y on the same shaft gears with and drives bevel wheel Z on starch roller F. The brush J is driven by the pinion 2 on the shaft of cone pulley O through pinion 3 and pulleys 4 and 5, while the cleaning brush 6 is driven by the brush J through the worm and worm wheel 7. A similar arrangement extends to the opposite end of the machine. The drying fan 8 is driven by a belt from the pulley 9 on the main driving shaft, while the fan 10 is driven from fan 8 by a similar arrangement. Pulley 11 drives in a similar manner the fans at the other end of the machine. Where steam is introduced to facilitate drying, these fans may be made to revolve inside a steam-heated chest, hot air being thus blown on the yarn. The measuring and marking motion 12 is an essential part, but being similar in principle and application to that already described in jute dressing, further description is unnecessary. The speed of linen yarn, as it passes through the dressing machine, usually varies from about $3\frac{1}{2}$ yds. to 8 yds. per minute, according to the class of yarn; naturally the slower speeds are used for the finer and more expensive yarns, as well as for weak yarns of a less expensive kind.

Fig. 51 is an elevation of the driving side of the centre of the machine. Between M and N the yarn passes through an ordinary "leasing heald" supported in frame 13. While the beam fills, the expanding presser 14 rests

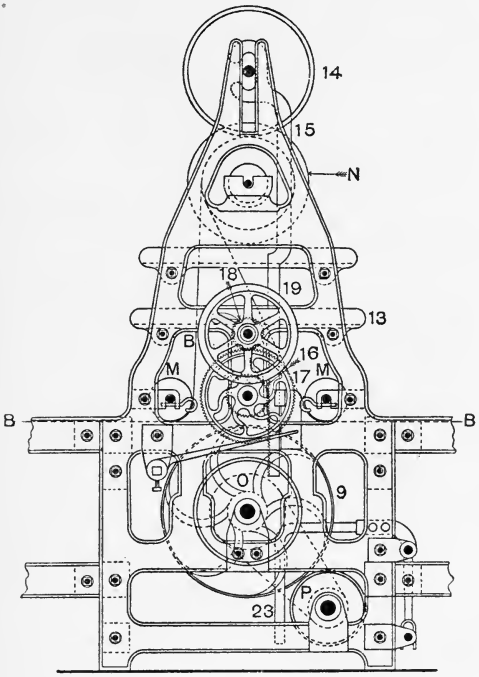

FIG. 51.

upon the yarn, and by means of its deadweight ensures a firm beam. The presser may be raised clear of the beam by means of the rack 15, rack wheel 16, wheel 17, pinion 18, and hand wheel 19, and retained in this position by a pawl and ratchet wheel behind pinion 18. Fig. 52 shows

the centre of the machine in cross elevation. The drive is conveyed from pulley 20 to vertical shaft 21 through the

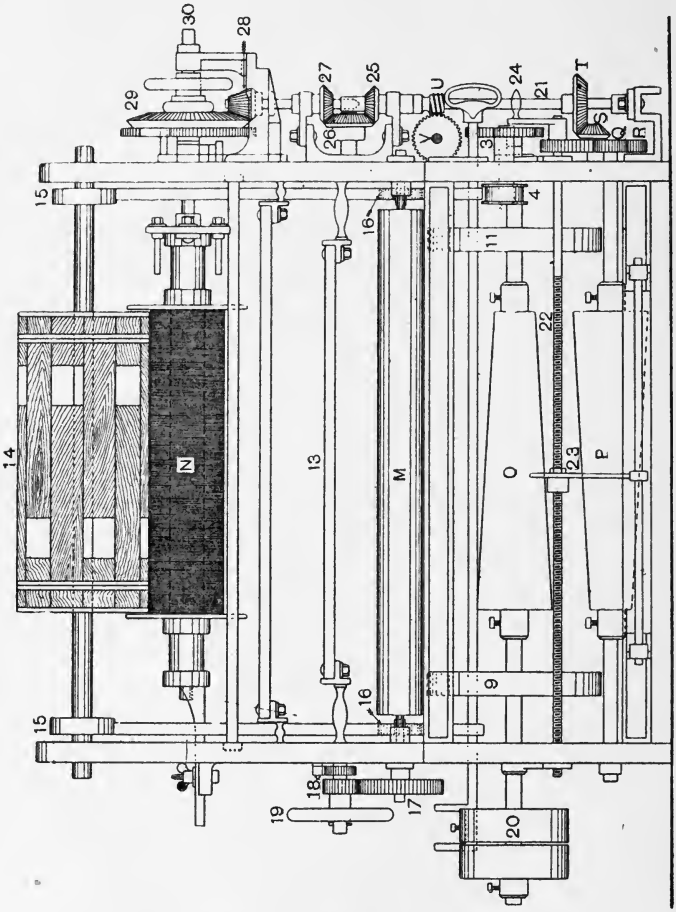

FIG. 52.

cone pulleys O and P, as already indicated, and the speed of the whole machine, except that of the brushes and the

driving fans, is regulated, according as necessity arises, by the above cone pulleys. The belt on the pulleys may be made to take any position between the ends of the cones by means of the screw 22 and the belt fork 23, actuated by handle 24. The loom beam N is driven from the upright shaft 21 by bevel pinions 25, 26, 27, and 28, the latter of which gears with the bevel wheel 29, loose on shaft 30. From this point the drive is by friction, and is similar in principle to that already fully described in the dressing machine for jute yarns. It will be observed that pinions 25 and 27 revolve in opposite directions, this being permitted by allowing the shaft of the latter to revolve loosely in a step, as shown. When the loom beam is in two halves it is necessary to drive one half beam in the opposite direction to the other when in the dressing machine, in order that the yarn may unwind in the proper direction when weaving. This is due to the fact that each sectional beam has only one draghead end by which it may be driven, and which must therefore come to the friction side of the dressing machine. To reverse the direction of the beam drive, pinion 26 is withdrawn, and pinions 25 and 27, Fig. 52, are clutched together in a simple manner, not shown, but by which they rotate together in the same direction.

Sometimes in the case of heavy linens it is necessary to use a steam-heated cylinder to aid in the drying of the dressed yarn, but in other respects this machine is similar to those already described, and Fig. 53 has been prepared to give a general view of this type of machine. It will be observed that instead of a leasing heald in the centre of the machine, two leasing reeds (one at each end) are used for the purpose of taking a drawer's lease. Fig. 54 shows four views of the lease or hook reed which is generally employed

for this purpose. It is built on the same general lines as an ordinary loom reed, and is about 5 ins. deep between

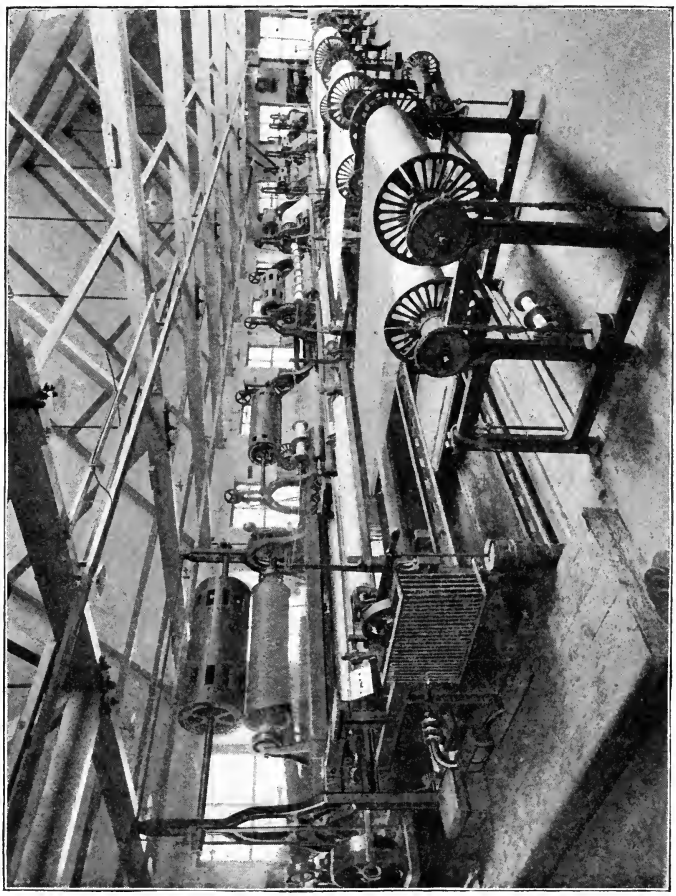

FIG. 53.

the ribs. It differs from an ordinary weaving reed in that the wires are brass instead of iron, and that alternate wires

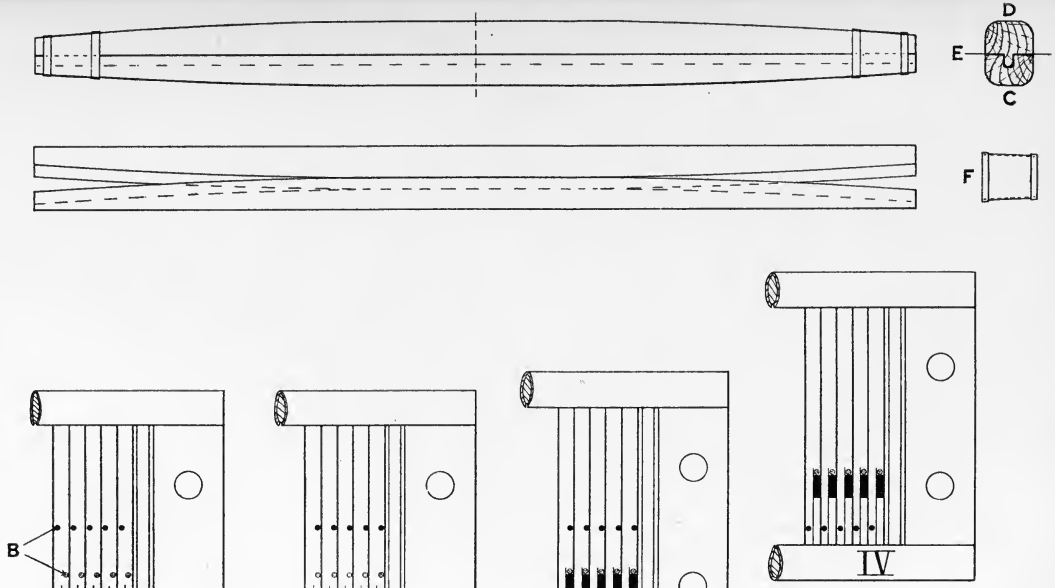

FIG. 54.

are short ones, and project only about $1\frac{5}{8}$ ins. above the lower rib. Each thin wire A is placed midway, as shown, between two ordinary wires, and is soldered to its neighbouring long wire in such a way that about one-eighth of an inch projects above the solder, the top of the wire thus forming, with the long wire and solder, a kind of hook into which a warp thread may be caught.

Two threads B (shown in distinctive marks for easy reference) are drawn through each split formed by the long wires, and the warp is divided permanently during dressing into two layers of odd threads and even threads by means of a rod which is situated between the dressing roller and the lease reed. This division, as is evident in diagram I., forms one part of the thread-and-thread lease required, which part may clearly be retained by passing a cord, or else a thin rod, usually termed a "wand," between the two layers, but in front of the reed. This wand is then allowed to move forward with the warp for a short distance, so that it will not interfere with the formation of the second part of the lease, which is obtained as follows:—A fellow-workman helps the dresser to take the hook reed from its supports, and to move it slightly endwise (to the left in the figure) until all the threads are in close contact with the hook side of the split, as demonstrated in diagram II.; the reed is then raised until each thread in the bottom layer is caught in its respective hook (diagram III.); the reed is then pulled endwise, or to the right, until each thread in the top layer of yarn bears against the left-hand wire; the reed is now raised until all the threads of the bottom layer are lifted by the hooks above the threads in the other layer, these latter threads being capable of moving downwards until they reach the bottom rib of the reed (diagram IV.). A second wand or else a cord is now in-

serted in front of the reed, and brought close up to the first wand or cord, after which the reed is returned to its original position.

It is obvious that if this procedure be carried out at both ends of the dressing machine, without modification, it will result in two separate thread-and-thread leases, each lease containing one-half of the total threads in the warp, and that tying-on or drawing-in must proceed from two sets of lease rods. This method is very simple, and is widely adopted, notwithstanding the apparent complication of the two sets of rods. It is possible, however, to obtain a perfect thread-and-thread lease on one set of lease rods by a modification of the above system and the use of another reed, sometimes termed a "crown" reed; this reed is situated immediately under the loom beam, and the yarn from both ends of the dressing machine passes through it, as indicated, just before it is wound on to the weaver's beam. In drawing the warp through this reed—which must, of course, be done in the dressing machine—a portion of the reed, say about two inches, is filled with yarn which comes exclusively from one end of the machine; then another two inches is filled with yarn which proceeds from the other end of the machine; and so on alternately until all the warp from both ends has been entered, in what are sometimes termed "basses," through the crown reed.

To obtain the lease required it is first of all necessary to obtain the thread-and-thread leases at each end by the method described above. These leases are retained on the thin wands which are run up with the yarn until they are close to the crown reed. The dresser then proceeds to pass these leases through the crown reed, bass by bass, in the well-known manner, when they naturally form a single thread-and-thread lease on the other side of the reed.

While this method may be troublesome and require a little time to perform, it nevertheless prevents crossed threads absolutely, and is widely adopted for very fine setts.

In many cases, and particularly for coarse yarns in low setts, no lease at all is taken, the threads of the warp being simply but firmly held in their approximate positions by a pair of specially constructed rods, termed "clasp-rods." Two views of these are also shown in Fig. 54. In the upper view the rods are closed; in the lower view, they are open. The sectional views at C and D show that their inner surfaces are formed with a mortise and tenon, slightly convex, between which parts the yarn E passes, and by which it is gripped firmly while it is in tension in the dressing machine. A soldered tin collar F is pushed firmly on each of the rods; these collars draw the two surfaces together, and thus practically all the threads are in touch with the two surfaces of the mortise and tenon. No matter how well and closely fitting the rods are made, nor how carefully they may be handled, it is impossible at times to avoid awkward crossings of the warp, and the practice cannot be recommended generally as a good substitute for the lease rods.

Some few firms prefer to dress each warping beam separately, and then to place all in the standards and to beam them dry. This is not the usual way, but there is an advantage in that a much smaller number of threads have to be watched during the dressing process, and when all are beamed dry there is obviously no danger of burnt threads caused by undue length of stoppages.

The warping machine illustrated in Figs. 48 and 49 (or at least very similar machines) is also used for sectional beaming, that is, by which the warp is made up of sections, but in which each section contains a certain number of

threads in the exact order in which they are intended to appear in the cloth; the exact number of threads is a definite proportion of the total number of threads required. The sectional beams are from 6 ins. to 18 ins. wide between the flanges, and have a square hole through which an arbor may be passed during the beaming process. When the desired number of beams have been made, they are placed on a square arbor so that they will rotate with the arbor, the ends of which are naturally turned to fit into the sockets on each side of the loom. Sometimes these sectional beams are placed behind the beaming frame, and re-beamed on to an ordinary weaver's beam.

CHAPTER VII

DRAWING-IN, REEDING, AND WEAVING

Drawing-in consists simply of drawing the warp yarn through the heddles of each leaf of the camb or mails of the harness in the proper order; reeding, in placing one or more of these threads through each split of the reed. For the relation between the draft, cloth, and weaving plans, Fig. 55, see *Textile Design: Pure and Applied*, pp. 9 to 18. The order of drawing and the number of threads respectively depend chiefly upon the design or weave of the fabric, but are also influenced by other considerations, such as the sett of the warp, etc. Referring to Fig. 55, in which the warp threads are shown passing from the yarn beam A and through the four leaves of the camb—represented by the lines 1, 2, 3, 4,—the order of drafting or drawing-in, and the leaf on which each thread is drawn,

are plainly seen by the numerals placed at points where

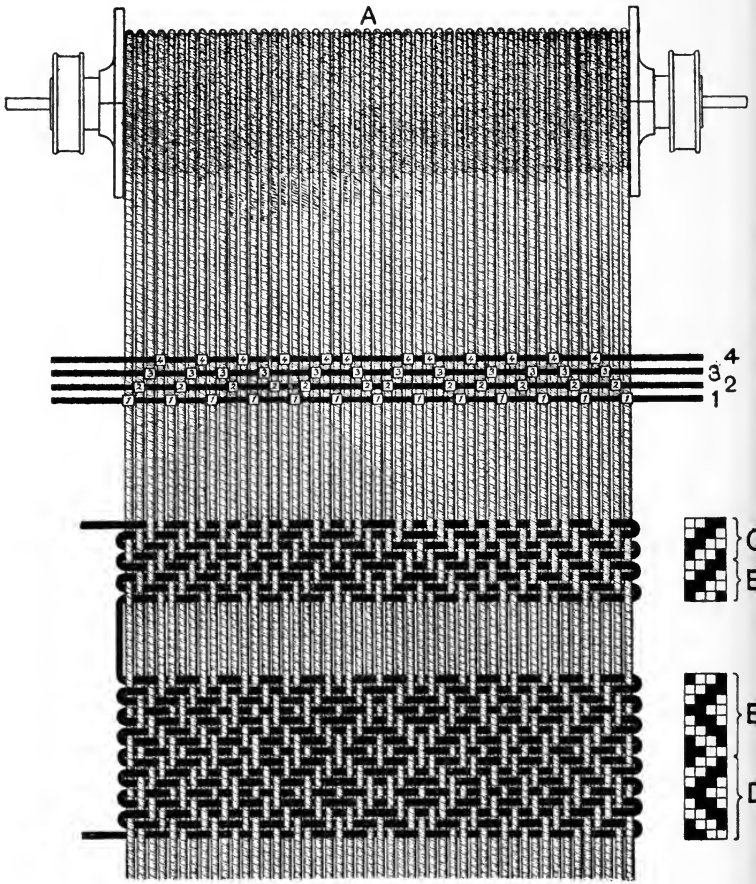

FIG. 55.

the threads cross the horizontal lines or leaves. This, however, is not the usual method of showing the order of

drafting, the figure having been introduced to show approximately the relative positions of the yarn, the leaves, and the cloth. In the following simple examples of drafting, A to F, Fig. 56, the method in general use—that of indicating the shaft on which a thread has been drawn by a dot or other suitable mark—has been adopted. The order of reeding is shown by a short horizontal line,

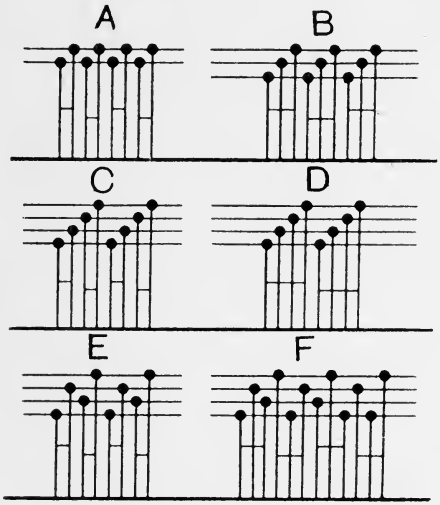

FIG. 56.

below the draft, connecting two or more threads which pass through the same split of the reed. In this figure, A is the draft for a plain cloth on 2 leaves, 2 in a split; B is a straight draft on 3 leaves, 3 in each split; C is a straight draft on 4 leaves, 2 in each split; D is a straight draft on 4 leaves, 4 in each split; E is a broken draft (commonly called skip shaft) on 4 leaves, 2 in each split; and F is a broken draft on 4 leaves, 3 in each split.

If possible, the camb and the reed should be the same sett, as the best results will be obtained when this is the case. Often, however, a camb is used of a finer sett than that of the reed, and when this is resorted to it is necessary that the surplus mails or heddles shall be "cast out" or "fileyed" at regular intervals. The order of casting out may be found as follows:—

$$\frac{\text{The sett of the camb}}{\text{Sett of camb} - \text{sett of reed}} = \text{the fileying interval or point}$$

at which a heddle on each leaf must be left empty.

Example 1: Suppose a 10-porter cloth were required to be woven in a 12-porter camb. Then $\frac{12}{12-10} = \frac{12}{2} = 6$. Thus every sixth gait,[1] or a heddle on each leaf, must be cast out; that is, if the camb consists of two leaves only, then 10 threads, equal to 5 gaits, must be drawn, and the sixth gait or one heddle on each leaf of the camb missed.

Example 2: An 1100's linen in a 1400's camb.

$$\frac{14}{14-11} = \frac{14}{3} = 4\tfrac{2}{3}.$$

In this case we have a fraction in the result. When this happens, the denominator represents the number of gaits to be missed or fileyed in each round or repeat. Had there been no fraction, every fourth gait would have been missed. It is evident that since $4\frac{2}{3}$ is nearer 5 than 4, a fifth will have to be missed more often than a fourth. The numerator of the fraction determines the number of times per round the fifth gait must be missed, and the difference between the numerator and denominator the number of times per round the fourth gait must be missed. Thus:—

[1] *Draft* = the order for one complete pattern.
Gait = one heddle on each leaf.

4	gaits drawn	1	gait missed.	
4	„	1	„	
3	„	1	„	
11	+	3		= 14.

Example 3: An 11-porter cloth into an 18-porter camb

$$\frac{18}{18-11}=\frac{18}{7}=2\tfrac{4}{7}.$$

2 gaits drawn, 1 gait missed for 4 times;
1 gait „ 1 „ „ 3 „ ;

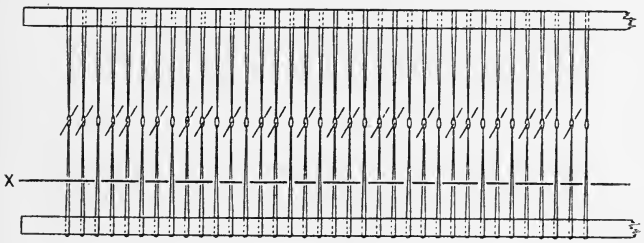

Fig. 57.

arranged as in Fig. 57 for better distribution; a band X is passed behind those heddles which represent gaits to be missed. For diced patterns and complicated drafts it is advisable to have the cambs built specially and the heddles spaced according to the pattern. In these cases it is usual to accompany the order for the camb by the draft and the sett of the pattern to be woven. Cambs are sometimes built with the heddles loose upon the leaves so that they may adjust themselves to almost any position necessary for the draft. These loose heddles may be made either of ordinary heddle twine or of wire; for some classes of work the wire heddles are extensively employed.

Weaving.—Before proceeding to consider more particularly in detail the three principal motions in weaving—viz. shedding, picking, and beating up—it will be advisable to consider them collectively in their

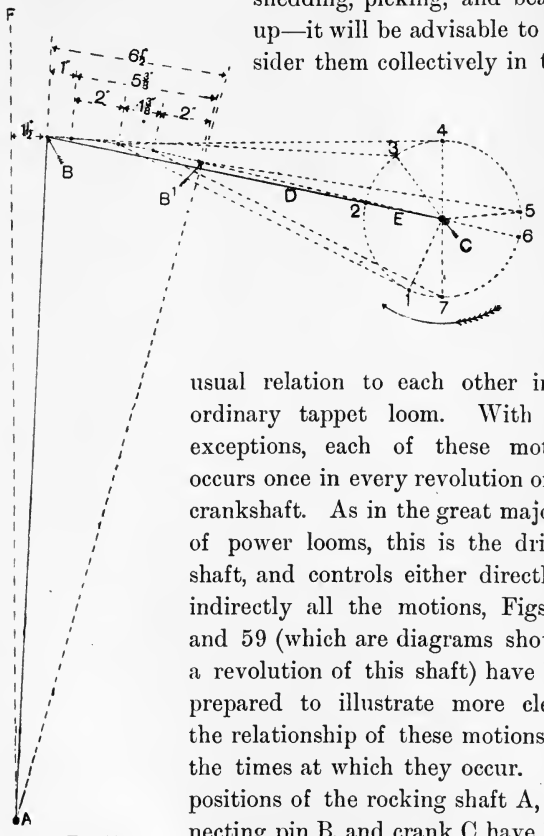

FIG. 58.

usual relation to each other in an ordinary tappet loom. With few exceptions, each of these motions occurs once in every revolution of the crankshaft. As in the great majority of power looms, this is the driving shaft, and controls either directly or indirectly all the motions, Figs. 58 and 59 (which are diagrams showing a revolution of this shaft) have been prepared to illustrate more clearly the relationship of these motions and the times at which they occur. The positions of the rocking shaft A, connecting pin B, and crank C have been carefully taken from a representative type of loom, largely used both in jute and linen weaving, the only difference in the diagrams being the direction of rotation of the crank as indicated by the arrows. The

various dimensions are as follows:—Length of sword from A to B, 28½ ins.; distance of B, when full forward, from the vertical line F, 1½ ins.; length of connecting rod D, 13½ ins.; radius of crank E, 3¼ ins.; and

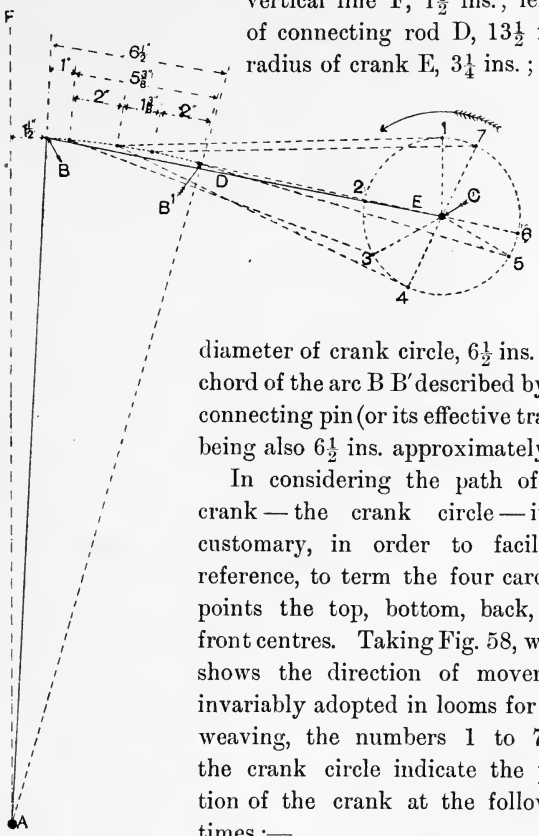

Fig. 59.

diameter of crank circle, 6½ ins.; the chord of the arc B B′ described by the connecting pin (or its effective travel) being also 6½ ins. approximately.

In considering the path of the crank — the crank circle — it is customary, in order to facilitate reference, to term the four cardinal points the top, bottom, back, and front centres. Taking Fig. 58, which shows the direction of movement invariably adopted in looms for jute weaving, the numbers 1 to 7 on the crank circle indicate the position of the crank at the following times:—

1. When the leaves of the camb are level—that is, midway in their action of changing the shed.

2. When beating up occurs, the reed being in contact with the cloth.

3. When the wypers enter on the dwell or pause, assuming one-third of a pick or 120° of the crank circle for dwell.

4. When the shuttle begins to move, generally termed the picking position.

5. When the wypers leave the dwell.

6. When the reed is full back, or farthest removed from the cloth.

7. When the shuttle should be at rest in the opposite box.

In general, point 1 (which in this case has been taken at 25° forward of the bottom centre) is found by withdrawing the shuttle from the shuttle box and turning the crank until the tongue and knee or frog of the warp protector are hard in contact. Point 2 must occur when the crank and the connecting arm are in one straight line. In this case point 2 is approximately 10° above the front centre. Points 3 and 5 must each be 120° removed from point 1. Point 4 shows the earliest time at which picking may occur, being made later according to circumstances. It will be observed that at this point the tongue of the warp protector in its backward movement will just have cleared the knee. Assuming the shuttle to begin its movement at point 4, it will have partly entered the shed about 40° later in the crank's revolution, at which time the pick is usually fully developed. At point 6, which is slightly farther removed from the back centre than point 2 is from the front centre, the crank and connecting arm must again be in one straight line.

The positions of the connecting pin in Fig. 59, which shows the direction of rotation more generally adopted in linen weaving, are identical with those shown in Fig. 58, and the relative positions of the crank at these points are

indicated by similar numbers. Due, however, to the fact that the plane of the crankshaft is so much lower than the plane of the connecting pin, points 1 and 7 (which have changed from the lower to the upper half of the crank circle) are 25° farther from the front centre; and points 3 and 4 (which have changed to the lower half) are 25° nearer the front centre than those in Fig. 58. Now, if picking may occur when the crank is at point 4 in Fig. 58, it is obvious that it may occur at point 4 in Fig. 59, as the connecting pin, and therefore the reed, occupy similar positions in each case. Where, however, shorter cranks are used, the plane of the crank circle invariably occupies a higher position than that shown in the two figures. It therefore follows that the time for picking, when the crank revolves as shown in Fig. 59, will be thrown nearer the bottom centre. With a 2-in. crank, and other dimensions unchanged, this position has been found to be approximately 15° in front of the bottom centre.

CHAPTER VIII

SHEDDING

THE first of the three principal motions in weaving is that of separating the warp threads according to pattern, for the insertion of the weft. Previous to shedding, the warp yarn may occupy one of the three following positions:—

1. At the bottom of the shed, in which case those threads forming the top part of the shed must be returned to the bottom every pick before a fresh selection can be made. An illustration of this type, termed "bottom

closed shedding," is shown in Fig. 60, where the solid lines passing through the heddles represent the position of the warp yarn when at rest, and the dotted lines show the

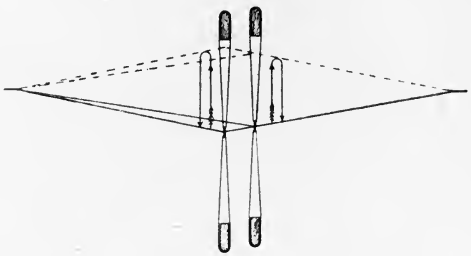

FIG. 60.

position of that part forming the top when the shed is open; the arrows indicate the distance through which each thread travels in one shedding operation—*i.e.* twice the depth of the full shed.

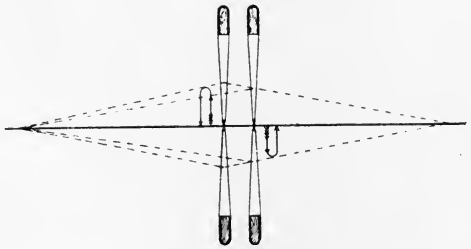

FIG. 61.

2. At the centre of the shed, in which case those threads that are to form the top and bottom parts are taken up and down respectively, and returned to the centre each pick. This type is termed "centre closed shedding." In Fig. 61 the solid line again shows the position of the yarn

when at rest, the dotted lines its position when the shed is open, while the arrows show the distance travelled in forming the shed. It will be seen that this distance is only half that of the first system, and on this account the shed ought, theoretically, to be formed in one-half the time. To obtain the full advantage of this, however, it would be necessary to drive the loom at twice its former speed; but from consideration of other parts this is impossible, and only a slight increase in speed is actually gained. One disadvantage in this style of shedding is that all threads are set in motion for every pick. This is particularly objectionable in jacquard weaving, as an excessive amount of movement is imparted to all lingoes. A further disadvantage of this method is that it produces reed-marked cloth; and, since the shed closes as the reed approaches the fell of the cloth, the warp threads are slack when beating up takes place, unless a vibrating back rest is provided to take up the slack. Without such a back rest, beating up comes on the warp in the nature of a shock, since the fell of the cloth is pulled backwards as the shed opens, and consequently must be driven forwards by the reed as the shed closes.

3. In this case the threads forming the top and bottom parts of the shed are retained in these positions until a change is necessary, when the threads are moved continuously and simultaneously from these points to form the new shed. This is termed "open shedding," and is represented by Fig. 62, where the solid lines indicate the shed at rest, and the arrows the distance travelled by any thread when a change in the shed is made. For most classes of work this is undoubtedly the best type of shedding, as the time occupied and the strain on the yarn

are reduced to a minimum, besides being the ideal shed for giving "cover" to the cloth.

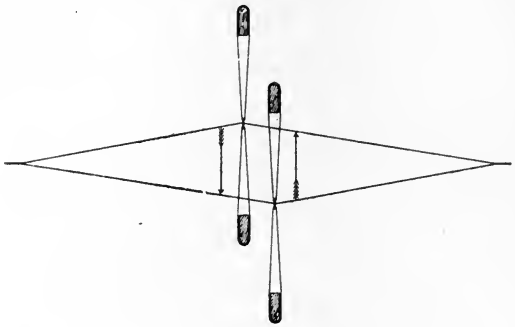

FIG. 62.

Fig. 63 represents a shed of a semi-open type, the only difference between it and the pure open shed being

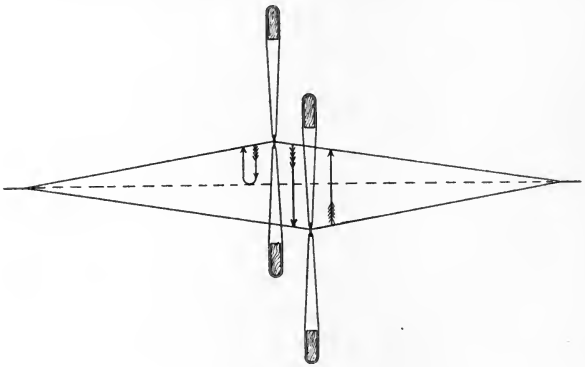

FIG. 63.

that all threads forming the top part travel to the centre position each pick in forming the new shed. Any thread, however that is to change from top to bottom, or *vice versa*,

does so in one direct movement as in the open shed. Threads that are to occupy the top position for two or more successive picks are caught in the centre of the downward movement and returned again to the top as indicated by the doubled arrow. This type of shed gives better cover to the cloth, is easier upon the warp from the point of view of shedding, but is harder upon it when beating up than that type indicated in No. 1.

The bottom-closed shed is formed principally by single-lift jacquards, by certain types of hand-loom dobbies, and by a few power-loom dobbies.

The centre-closed type of shed is found in all kinds of hand and power looms, but not extensively in any.

The open shed is utilised in all modern wyper and tappet looms, and in many power-loom dobbies, but very few jacquards are found working on this principle.

The semi-open type of shed is common to all double-lift jacquards and to a few double-lift dobbies.

In power looms there are three distinct methods of accomplishing this operation of shedding—by wyper or tappet, by dobby machine, or by jacquard. The first, that of wyper or tappet shedding, may be either negative or positive. If the former, the tappet is usually constructed simply to depress a treadle to which is attached one of the leaves of the camb, the raising of the leaf being accomplished by counterweights, by springs, by camb rollers, or by some other similar compensating motion situated either over or under the leaves of the camb depending upon the position of the wyper itself. When any type of roller motion is used, the connections are such that the movement of any leaf of the camb in one direction causes another leaf to move in the opposite direction. Positive tappets and their connections are constructed and arranged

both to raise and to depress the camb leaves to which they are attached.

Before proceeding to construct a wyper or tappet it will be necessary to discuss some of those considerations which go to affect its shape or form. Chief amongst these are the pause or dwell which is to be given to the leaves —first, to permit of the passage of the shuttle; and second, to enable the warp threads to spread equally or give "cover" to the cloth,—and the nature of the movement to be given to the leaves of the camb while changing from one fixed line to another. Wypers will be found having dwells from one-third to one-half of a pick, or, in other words, equal to from 120° to 180° *of the crank circle.* It will be readily understood that any increase in the time given to the dwell will reduce by that extent the time allowed for closing and opening the shed, thus increasing the strain on the yarn and on all the shedding parts of the loom which happen to be in motion. In the face of this it is not surprising that in most cases the theory of long dwells is fast dying out, and that it is now exceptional to find a loom of 36-in. reed space with a wyper having a dwell exceeding 120° of the crank circle, or one-third of a pick. Provided the wypers are properly set, this pause of 120° is found, even in some 60-in. reed-space looms, to be quite sufficient to enable the shuttle to pass through the shed, and at the same time to have the latter sufficiently well opened to prevent reed marking when the weft is beaten up.

In wide looms the dwell may be, and often is, increased with advantage to the general working of the loom, as the increased dwell permits of the wyper being set so as to enable the shuttle to pass freely from the shed, and yet have sufficient "shed on" to prevent reed marking. In

fact, in wide looms, satisfactory work will not be easily produced unless the dwell of the wyper be increased to some extent. This increase of dwell, however, does not necessarily mean a decrease in the time allowed for shedding. As a matter of fact, due to the reduced speed of the loom, the dwell may be increased, and the time allowed for shedding be still greater than that allowed in narrow looms.

Hitherto the amount of dwell to be given for looms of different widths has been pretty much neglected; in fact, no rule for such purpose, so far as our knowledge goes, has ever been observed.

In determining the increase to be given to the dwell beyond 120° of the crank's revolution, which we shall consider as the minimum dwell suitable for looms of 36-in. reed space, it is of course necessary to take into account the reduced speeds of the wider looms. Consideration should also be given to the fact that in the wider looms the initial velocity of the shuttle is usually greater than that in the narrow loom; but, since in practice the proportionate increase in velocity of the shuttle is very slight as compared with the proportionate increase in the reed space, even when due allowance is made for the reduced speed of the loom, we shall, in order to simplify calculation and to ensure erring on the safe side, assume that the shuttle travels at the same velocity in all widths, and that the time taken by the shuttle in passing through the shed is in exact proportion to the reed space. Further, the speeds of the different widths will be approximately the same as those found in present-day practice for looms of a moderately heavy type, viz. :—

36-in.	reed space.	160	picks per minute.
46-in.	,,	145	,, ,,
60-in.	,,	130	,, ,,
81-in.	,,	115	,, ,,
120-in.	,,	95	,, ,,
156-in.	,,	85	,, ,,

Now in a 36-in. reed-space loom 120° of the crank's revolution are allowed for dwell, but, as the shuttle enters the shed when the crank is 40° behind the top centre, or 75° past point 3, Fig. 58, at which point the wyper enters on the dwell, only 45° of the dwell remain to pass the shuttle through the shed before the leaves begin to close. Hence the actual time allowed for the shuttle to cross in the narrow loom before the leaves commence to close is :—

$$\frac{60 \text{ seconds}}{160 \text{ picks per minute}} \times \frac{45^\circ}{360^\circ} = 0{\cdot}0468 \text{ second.}$$

While an eighth of the crank's revolution, 45°, may seem a small portion of the time to allow for the passage of the shuttle in any loom, it will be shown later that the form of the wyper immediately beyond the dwell is such as to increase considerably the extent of the dwell, and the time during which the leaves of the camb remain practically in full shed.

It will be evident from the foregoing that, in order to find the extent of the dwell necessary for the passage of the shuttle in any width of loom greater than 36-in. reed space, 45° must be increased in direct proportion to the reed space, and reduced in proportion to the reduction in the speed of the crankshaft. Thus for a 46-in. reed-space loom, at 145 picks per minute, we should have :—

$$45^\circ \times \frac{46''}{36''} \times \frac{145 \text{ picks}}{160 \text{ picks}} = 52 \text{ degrees dwell ;}$$

and similarly for the others, the values of which are :—

Reed space	36″	46″	60″	81″	120″	156″ ;
Degrees dwell	45°	52°	61°	73°	89°	103° ;

while the total dwell, etc., will be :—

Reed Space.	Speed.	Degrees of Dwell before Shed is entered.		Degrees of Dwell for Passage of Shuttle.	Total Dwell.
36-in.	160	75°	+	45°	120°
46-in.	145	75°	+	52°	127°
60-in.	130	75°	+	61°	136°
81-in.	115	75°	+	73°	148°
120-in.	95	75°	+	89°	164°
156-in.	85	75°	+	103°	178°

But it is obvious that as that part of the crank's revolution devoted to opening the shed is reduced, the amount of "shed on" when beating up occurs will not be sufficient to give "cover," unless the wyper enters on the dwell earlier than 35° before the top centre is reached, in proportion (approximately) as the time for opening is reduced. For example, the time for opening in a 36-in. reed-space loom is 120°, but in the 156-in. reed space it is only 91° ; therefore the wyper would require to enter on the dwell :—

$$91 : 120 = 35° : 46°$$ in front of the top centre.

As these extra 11° fall to be added to the dwell already found, the total dwell for the 156-in. reed-space loom would be $178 + 11 = 189°$, say 190° of the crank's revolution. Similarly with the other widths.

Fig. 64 represents the path of the crank divided into three equal parts of 120° each, the arrow indicating the direction of motion. When at point A the shed should be closed, and the wypers, of course, level. From point A to point B is occupied in opening the shed ; from B to C in dwell ; and from C to A in closing the shed. It will thus be seen that two-thirds of a full revolution,

from C to B, are utilised in changing the shed. The positions of these points, which have been found satisfactory for comparatively light and open fabrics which have a tendency to show reed marks, may vary slightly according to the class of work and the extent of the dwell, as before mentioned.

In regard to the nature of the movement of the camb leaves, this should be such that as the strain on the warp increases, the speed of the leaves will decrease. Each leaf should begin to move slowly from the full open point, gradually increase in speed until the centre of the stroke is reached (at which point the speed is greatest), when the speed should as gradually decrease until the opposite extreme is reached. Given a loom going at the rate of 160 picks per minute, it will be found that the changing of the shed has to be accomplished in one-quarter of a second, while one-eighth of a second is occupied by the dwell. Thus :—

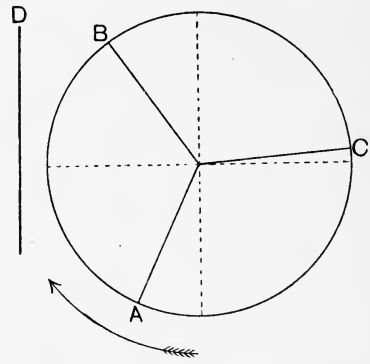

FIG. 64.

$$\frac{60 \text{ secs.}}{160 \text{ picks}} \times \frac{240^\circ}{360^\circ} = \tfrac{1}{4} \text{ sec. for change.}$$

$$\frac{60 \text{ secs.}}{160 \text{ picks}} \times \frac{120^\circ}{360^\circ} = \tfrac{1}{8} \text{ sec. for dwell.}$$

Fig. 65 shows how the irregular motion to the leaves is generally obtained. A to B is the full depth of the shed. The semicircle DCE (with diameter DE equal to AB)

is divided into six equal parts, and from points obtained by this division perpendiculars to the shed line are dropped. This divides each half of the shed into three graduated parts, and as to each of these unequal parts is allotted an equal portion of time—one-sixth of the full time occupied in shedding,—it follows that the movement will be as already indicated. The same length of time—$\frac{1}{24}$ sec.—is occupied by the camb leaf in travelling through each of

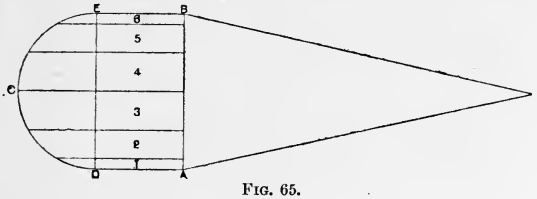

FIG. 65.

the spaces 1, 2, 3, 4, 5, 6. The actual distances of these spaces can be obtained as follows :—

For a radius of 1 in.—

The versed sine of $30° = 0{\cdot}133975$.
" " $60° = 0{\cdot}5$.
" " $90° = 1{\cdot}0$.

Then for a shed of, say, 5 ins.—that is, a radius of $2\frac{1}{2}$ ins.—

$0{\cdot}133975 \times 2{\cdot}5 = 0{\cdot}3349375$ in., depth of spaces 1 and 6
$(0{\cdot}5 - 0{\cdot}133975) \times 2{\cdot}5 = 0{\cdot}9150625$ in., " " 2 " 5
$(1 - 0{\cdot}5) \times 2{\cdot}5 = 1{\cdot}25$ ins., " " 3 " 4
$2{\cdot}5$ ins.

and

$2{\cdot}5$ ins. $\times 2 = 5$ ins. total depth of shed.

Fig. 66 shows the construction of a negative tappet or wyper. Data necessary :—

1. Distance from the centre of wyper shaft to the centre of treadle bowl, when the treadle is level (say 6 ins.).

2. Throw or stroke of wyper (say $3\frac{1}{2}$ ins.).

3. Dwell of wyper (one-third of a pick, or 120° of the crank circle).

4. Diameter of treadle bowl or anti-friction roller (say 3 ins.).

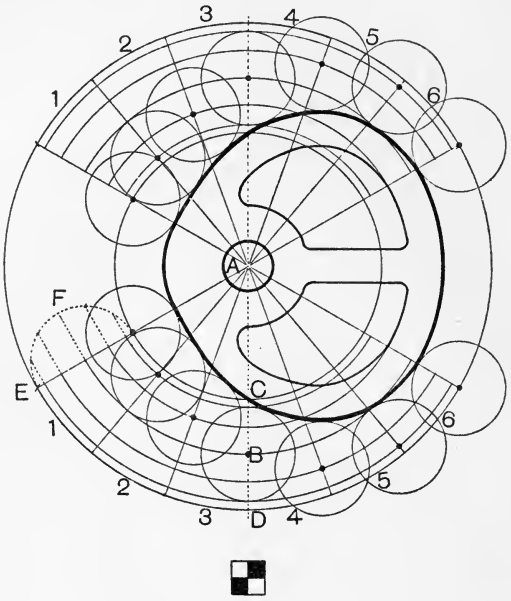

FIG. 66.

From a point A on a vertical line set off B (the distance from the centre of the wyper shaft to the centre of the treadle bowl when the treadle is level — viz. 6 ins.). Above and below B set off at C and D half the throw of the wyper—viz. $\frac{3\frac{1}{2}}{2} = 1\frac{3}{4}$ ins. With A as centre, and AC, AD as radii, describe circles, and, since these circles represent

one complete revolution of the tappet, divide them into the same number of equal parts as there are picks in one repeat of the weave. The amount to be allowed for dwell per pick should then be marked off on each division of the circle. The extent of this will always be determined by the extent of the dwell as part of a revolution of the crank, and by the number of picks in a repeat of the weave, and can always be found as follows :—

$$\frac{\text{dwell in degrees of crank circle}}{\text{number of picks in one repeat of weave}} = \text{degrees dwell on wyper circle.}$$

When the number of degrees on the crank circle is 120, and the weave $\frac{1}{1}$ plain, the number of degrees on the wyper circle is 60, or $\frac{1}{6}$ of the circle; consequently, the simplest plan is to divide the wyper circle into six equal parts: similarly, for any other weave with the same amount of dwell on the crankshaft, *e.g.* a 3-pick weave has 40° dwell, a 4-pick weave has 30° dwell, and these values are respectively equal to $\frac{1}{9}$ and $\frac{1}{12}$ of the respective wyper circles; in all such cases the number of divisions of the wyper circle is found by multiplying the picks per repeat by 3. In the present case 2 picks $\times 3 = 6$ divisions. Each of these divisions in Fig. 66 represents one-third of a revolution of the crank, or one-third of a pick, the time occupied by the dwell. To each pick one part is allotted for dwell, and two parts for closing and opening the shed. Divide these two parts into any number of equal spaces (say six). On one of the lines dividing the circle, say EA, describe a semicircle F, equal in diameter to the distance CD, and subdivide it also into six equal spaces (similar to Fig. 65). From points obtained on the semicircle by this division, drop perpendiculars to meet the line on which it is constructed. With A as centre, and points where these

perpendiculars cut the line as radii, describe arcs in the parts allotted to the closing and opening of the shed. The points where these arcs cut the radial lines may be taken as the centre of the treadle bowl at different points of its travel, and with the radius of the treadle bowl describe circles showing its position at these points. A curved line drawn tangent to these circles will be the outline of the tappet. Those parts at the dwells may be drawn in with the compasses, as the outline of the tappet there must be part of a circle. The above is the construction of only one blade of the wyper, two blades being necessary, but set diametrically opposite, for plain cloth, one for each leaf or treadle.

Any negative tappet may be constructed on the same principle. Say one is required for a four-leaf twill, 1 down, 3 up, in regular order. Four blades will be required, set in their proper order according to the weave shown in Fig. 67, in which figure is also the construction of one blade of the tappet. Four picks $\times 3 = 12$ parts into which the circle must be divided, one part being allowed for dwell, and two parts for closing and opening the shed in regular succession, as shown. Further construction is in all respects similar to that already gone through, and will be readily understood.

Fig. 68 shows the construction of one blade of a wyper for the first leaf of the weaving plan on 4 leaves. (This weaving plan is the same as that illustrated at D and E, Fig. 55, page 110.) Since there are 8 picks in a repeat, the wyper circle is divided into 8 equal parts. It is a convenient plan to mark each pick, A.....H, as indicated, immediately opposite the part intended for the dwell. When this is done it will be observed that at one part there are three successive marks, while at each of two other

parts there are two successive blanks. A change from one position to another is required obviously only between dissimilar blocks or squares; hence it is only necessary to divide the spaces for change between A and B, C and D, D and E, and F and G. When the blade is constructed it

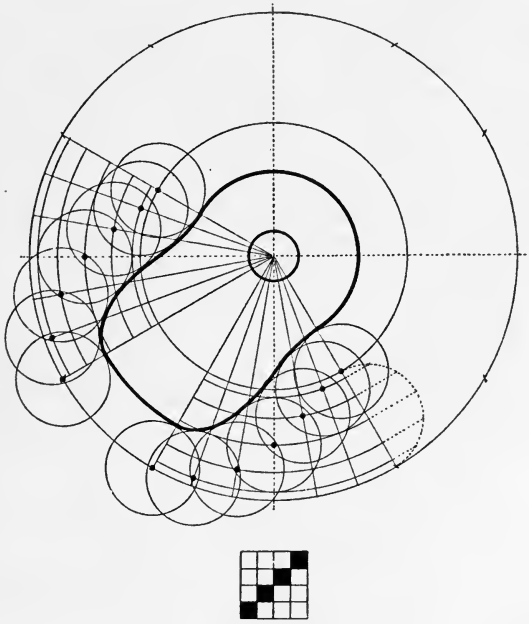

FIG. 67.

is clear that the dwell extends over picks G, H, and A, as well as between the two intervening parts during which some leaves will be changing; this is necessary if the shedding is to be on the open-shed principle, *i.e.* if the leaf in question is to remain motionless for three successive picks. Similarly for picks B and C, and for E and F, the

dwell extends over the two parts marked with blank

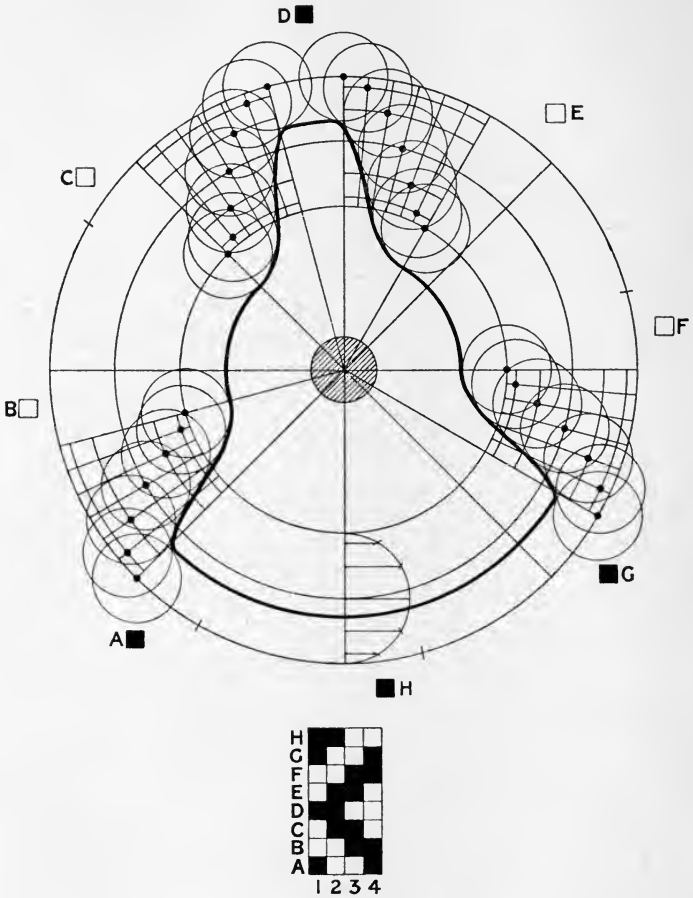

FIG. 68.

squares (the dwells) and the space between the dwells.

Fig. 69 shows the construction of a plain wyper for a 4-yd. loom, with 190° of the crank circle as dwell. On a vertical line A draw circles B, C, and D, as in Fig. 66. The line A thus divides these circles into two equal portions, each of which represents one revolution of the crank. As the wyper shaft revolves at half the speed of

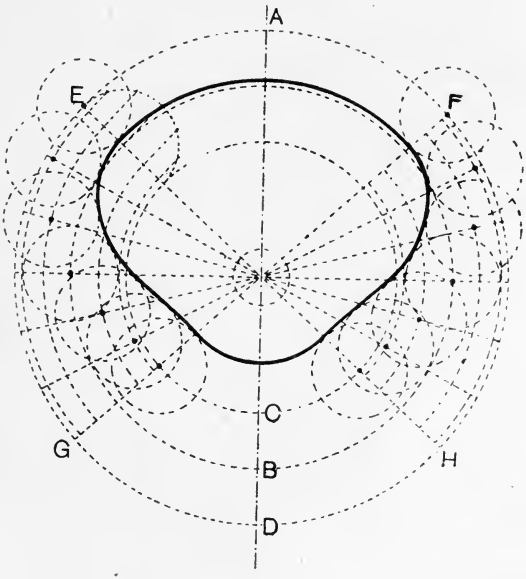

Fig. 69.

the crankshaft it follows that $\frac{190}{2} = 95°$ of the wyper circle will be the requisite amount for dwell. Therefore on both sides of A and D set off $\frac{95}{2} = 47\frac{1}{2}°$ at points E, F, G, H. The times for changing the shed will therefore be from E to G and from H to F. Divide these spaces into six equal parts, and proceed as explained with reference to Fig. 66.

As already stated, the method adopted in the construction of the foregoing tappets for obtaining the irregular movement of the camb leaves is that generally used; but under certain conditions—*e.g.* where the yarns are very weak, etc.—it may be desirable to reduce still further the speed of the leaves when they are near their extreme

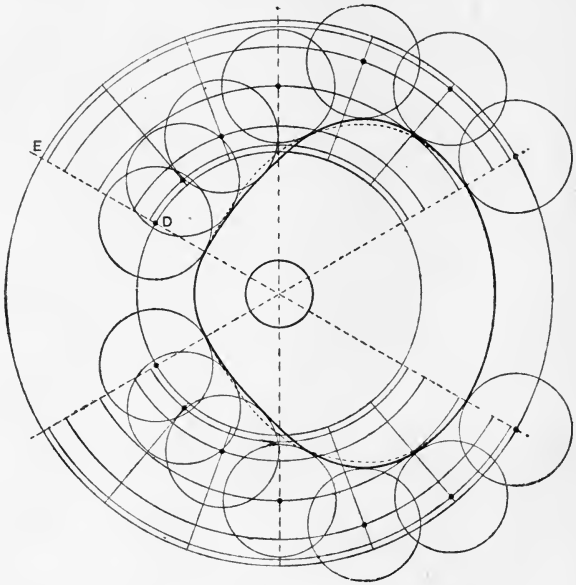

FIG. 70.

positions. Fig. 70 shows one method by which this may be obtained. Line DE—representing the stroke of the wyper—has been divided arbitrarily in the ratio of 1 . 3 . 6 . 6 . 3 . 1. The outline of the wyper resulting from this ratio of acceleration is shown by the heavy black line; while the dotted line shows the outline of that constructed from the ratio obtained by the semicircle, as in

Fig. 66. A decrease of speed at any point must necessarily mean a corresponding increase at some other part of the stroke. The speeds of these two methods will be seen by the following comparative table :—

	Parts 1 and 6.	Parts 2 and 5.	Parts 3 and 4.
Harmonic ratio obtained by semicircle .	0·3349375 in.	0·9150625 in.	1·25 ins.
Obtained by arbitrary ratio . .	0·25 in.	0·75 in.	1·5 ins.
Difference in $\frac{1}{24}$ of a second .	0·0849375 in.	0·1650625 in.	0·25 in.
	Decrease.		Increase.

It must be understood that these figures assume a perfectly made wyper to the above conditions. It is, however, impossible to work to anything approaching such exactness ; indeed, in practice it is unnecessary to consider any figure beyond the second place of decimals.

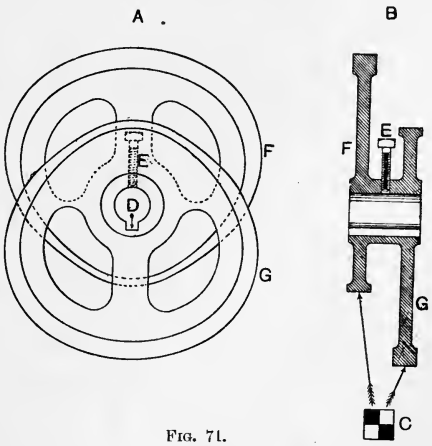

Fig. 71.

Part A, Fig. 71, shows the two blades of a plain wyper as arranged to be driven on a supplementary shaft, part B showing a section through the centre, and C a plan of the plain weave. In this shaft a long key is fixed to take

into the key-seat D in the wyper, lateral movement being prevented by the set screw E. Since all wypers on a supplementary shaft are driven by means of toothed gearing from the wyper shaft proper, it is only necessary, when they require to be changed as regards their time of shedding, to lift out the shaft and replace it into gear later or earlier, as required. When the wyper is intended for the wyper shaft proper, it is sometimes made in halves and bolted together on the shaft; in other cases it is made solid, as above. The former is probably the better method, as it permits of adjustment or replacement more readily than the other. As the leaves of the camb recede from the fell of the cloth it is necessary that they shed proportionately deeper in order to present an equal opening to the shuttle. In the wyper shown, blade F, which is intended to actuate the back leaf of the camb, is arranged to give a greater travel to that leaf than blade G will convey to the front leaf. This is necessary, owing to the fact that the fulcra of the treadles are at the back of the loom, and the farther the leaf is removed from the fell of the cloth, the nearer will its point of connection be to the fulcrum of the treadle. When the fulcra of the treadles are at the front of the loom, the increased depth of shed is obtained by the increased leverage, and the throw of all the blades, no matter how many are employed, is the same.

Positive Tappets.—These may be either cast solid or built of sections. The former is of course preferable, as it gives more satisfactory work, but the latter allows of an almost endless variety of weaves being employed, as the tappet may be arranged to suit any design within its compass. Weaves up to 8 leaves and 24 picks to the round are, however, about the limit, although tappets are sometimes built for 32 picks to the round. Any weave may be

arranged for, provided the number of picks in a repeat is a measure of the number of picks in a round of the tappet. For example, a weave repeating on 2, 3, 4, 6, 8, or 12 picks can be arranged on a tappet constructed for 24 sections to the circle. The construction of a solid positive tappet is in all respects similar to that of a negative one, with the addition of an outside bead running parallel to the outline of the tappet, to prevent the treadle bowl from leaving

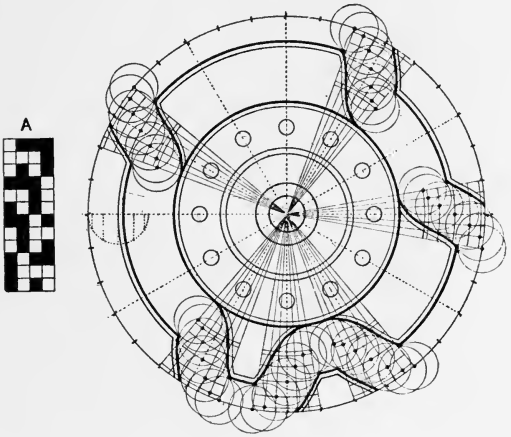

FIG. 72.

its position. The groove in which the treadle bowl runs must be greater than the diameter of the bowl by about $\frac{1}{8}$ in. Fig. 72 shows the construction of one blade of a positive tappet for weave A, 12 picks to the round $\frac{2}{3}\frac{1}{2}\frac{3}{1}$. Woodcroft positive tappets are built of sections, and may be arranged either for centre or for open shedding. For centre shedding only two types of sections are used—Nos. 1 and 2, Fig. 73; while for open shedding the eight different types shown in the same figure are required.

Fig. 74 shows one or more sections of each kind built to

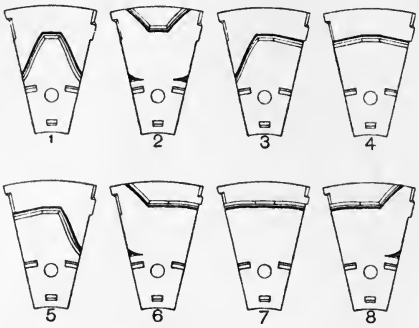

Fig. 73.

actuate the first leaf of weave B—shown in the same figure, —14 picks to the round $\frac{4}{4}\,\frac{2}{2}\,\frac{1}{1}$. Seven plates would be

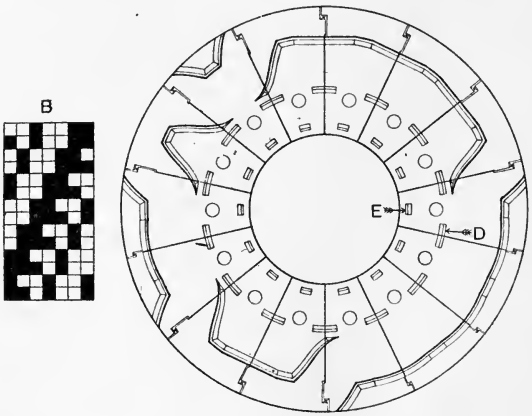

Fig. 74.

required to produce the above weaves (one plate for each leaf), each plate to contain 14 sections (one section for each

pick). These sections are held together by binding plates or rings (Fig. 75). A and B are plans of different rings, while C is a sectional elevation. The latter shows two beads, Nos. 1 and 2, which grip respectively outside and inside the projecting pieces D and E on each section of the plate (Fig. 74). All plates and rings are bolted together through bolt holes shown in each plan A and B and in each section of the plate. The bolt holes in A are spaced irregularly so that they may suit plates composed of various numbers of sections, whereas B is intended for plates consisting of 14 sections only. These tappets are invariably placed outside the loom frame, and are driven by suitable gearing from the crankshaft.

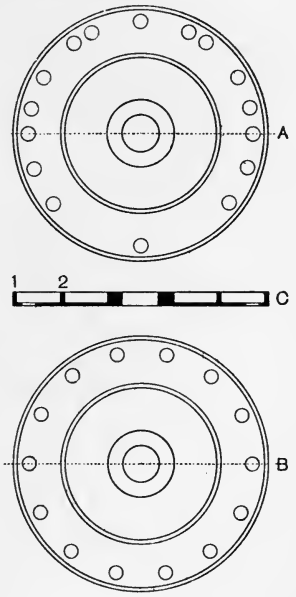

Fig. 75.

The front and end elevations in Figs. 76 and 77 show the method of actuating the camb leaves by means of the above positive tappets. A is a pinion on the crankshaft, B a wheel on the supplementary shaft, C a treadle fulcrumed at D, and E a treadle bowl carried by the stud projecting from the treadles C at a suitable point above the tappet. As the tappet revolves, the bowl E, and therefore the treadle C, is alternately raised and depressed, according to the build of the tappet; and the treadles C being connected to the camb leaves F by means of the top and bottom levers or jacks G,

fulcrumed at H, and the cords J, it follows that the desired motion results. Variation in the lift is obtained by the strap from the treadle C being attached nearer to or farther

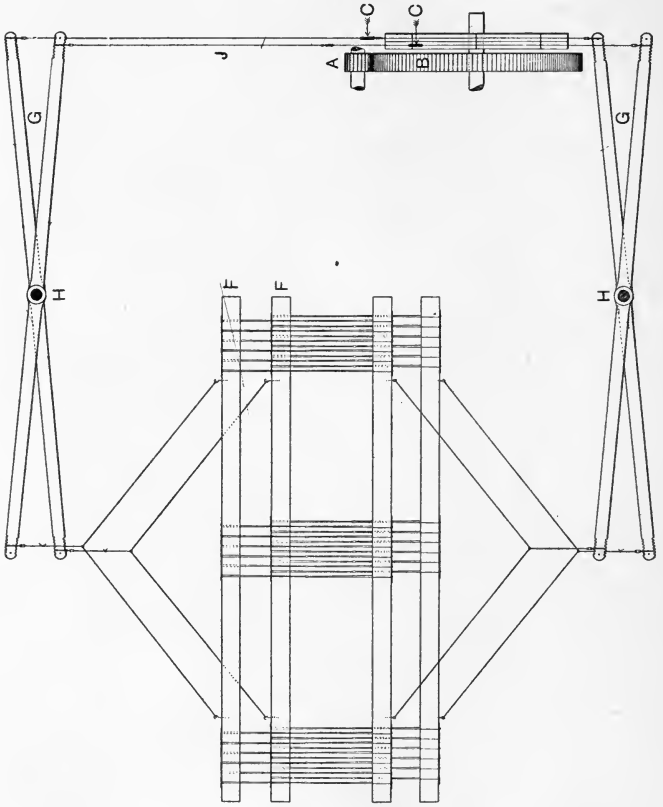

FIG. 76.

from fulcra H and D. Other types of shedding tappets are in more or less restricted use, but since they act on much the same principle as one or other of those already described, it is unnecessary to introduce them.

To calculate the throw necessary for a shedding wyper under any conditions, the following data are necessary :—

1. The breadth and depth of the shuttle.
2. The distance of the reed from the fell of the cloth when the full depth of the shuttle has entered the shed.
3. The distance from the fell of the cloth to the leaf of the camb.
4. The length of the treadle from the fulcrum to the point of connection with the leaf.
5. The length of the treadle from the fulcrum to the centre of the treadle bowl.

The following dimensions may be taken as typical of a loom for coarse fabrics :—

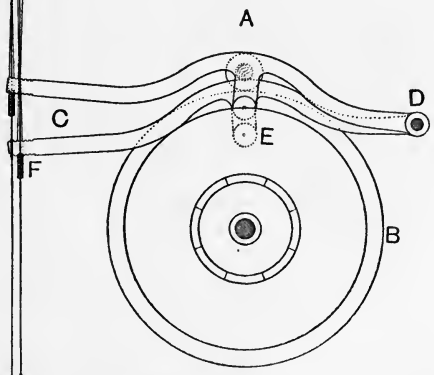

FIG. 77.

1. $2\frac{1}{4}$ ins. broad by 2 ins. deep.
2. $6\frac{1}{4}$ ins.
3. $9\frac{1}{2}$ ins.
4. 33 ins.
5. $16\frac{1}{2}$ ins.

Fell of cloth to reed ($6\frac{1}{4}$ ins.) – breadth of shuttle ($2\frac{1}{4}$ ins.) = fell of cloth to face of shuttle (4 ins.).

Therefore the shed at 4 ins. from the fell of the cloth must be 2 ins. deep. Required, its depth at $9\frac{1}{2}$ ins., the distance of the leaf from the fell of the cloth :—

4 ins. : $9\frac{1}{2}$ ins. = 2 ins. : $4\frac{3}{4}$ ins., depth of shed required.

$4\frac{3}{4}$ ins. is also the travel of the treadle at its point of connection (33 ins.) with camb leaf. Required, its travel at treadle bowl :—

33 ins. : $16\frac{1}{2}$ ins. = $4\frac{3}{4}$ ins. : $2\frac{3}{8}$ ins.

Therefore the throw of the wyper = $2\frac{3}{8}$ ins.

CHAPTER IX

TAPPET DRIVING AND SETTING

WHERE changes are seldom made, plain tappets—*i.e.* those with two picks to the round—are almost invariably keyed to the bottom or wyper shaft, this shaft being so called because of the fact that in an ordinary plain loom it carries both the shedding and the picking wypers. In ordinary cases this shaft revolves at half the speed of the crankshaft, and so gives the requisite speed. Where changes are frequent, it is advisable to have the plain wyper or tappet on a supplementary shaft, and driven from the wyper shaft by wheels having an equal number of teeth. With this arrangement changes from two to three or four-leaved work can be done rapidly. Each different wyper having its own shaft with pinion keyed on, it is only necessary, as previously mentioned, to lift out the one shaft, lift in the other, and put the wheels into gear.

Fig. 78 shows the gearing for driving a tappet having eight picks to the round. The pinion A of 30 teeth on the wyper shaft gears with the intermediate wheel B of 60 teeth, with which is compounded the pinion C of 30 teeth. The latter gears with the wheel D of 60 teeth on the supplementary shaft. Take an ordinary case where the spur wheel on the crankshaft has 26 teeth, and the wheel which it drives on the wyper shaft 52 teeth, the value of the motion will then be as follows:—One revolution of

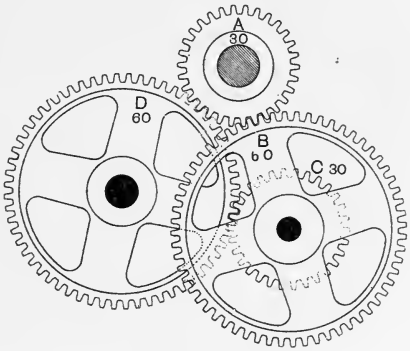

Fig. 78.

the crank $\times \frac{26}{52} \times \frac{30}{60} \times \frac{30}{60} = \frac{1}{8}$, or the speed of the supplementary shaft one-eighth that of the crankshaft. The foregoing wheels are in general use in looms for jute fabrics, but other wheels of the same value are employed in looms of a lighter character. To change the above motion to four picks to the round it is only necessary to withdraw the intermediate wheel B and pinion C from their stud, and to gear pinion A direct with the wheel D on the supplementary shaft. The value of this motion will then be:—One revolution of crank $\times \frac{26}{52} \times \frac{30}{60} = \frac{1}{4}$, or the speed of the supplementary shaft one-fourth that of the crank-

shaft. If a motion for three picks to the round be required, the speed of the supplementary shaft will require to be one-third that of the crankshaft; but as the speed of the wyper or bottom shaft is to the speed of the crankshaft as 1 is to 2, the speed of the supplementary shaft to that of the wyper shaft must be as 2 is to 3. The pinion on the supplementary shaft will therefore require to be to that on the wyper shaft as 3 is to 2. Suitable wheels bearing this relation would be :—Supplementary shaft wheel, 54 teeth; wyper shaft wheel, 36 teeth. That this would give the required motion is shown thus :—One revolution of crank $\times \frac{2}{5} \frac{6}{2} \times \frac{3}{5} \frac{6}{4} = \frac{1}{3}$, or the speed of the supplementary shaft one-third that of the crankshaft. The motion necessary for driving a tappet having any given number of picks to the round may be determined in a similar manner, whether it be an inside negative tappet driven through the medium of the wyper shaft, or an outside positive tappet driven by the crankshaft direct or through the medium of intermediate pinions. In all cases suitable pinions and wheels may be found by the formula :—

$$\frac{\text{Product of driven wheels}}{\text{Product of driving wheels}} = \text{picks per revolution of the tappet.}$$

Fig. 79 illustrates in plan and elevation the method adopted by Messrs. Robertson and Orchar, Limited, of Dundee, in arranging for the three- and four-leaf wypers on a supplementary shaft, with provision for actuating the plain wyper from the wyper shaft without necessitating a change of treadles. In the elevation the spur wheels A of 26 teeth and B of 52 teeth, or their equivalents, are common to most looms for jute weaving. For the four-leaf gearing shown, the pinion C of 20 teeth on the wyper shaft D gears with the wheel E of 40 teeth on the supplementary

wyper shaft F; the latter will therefore revolve at one-

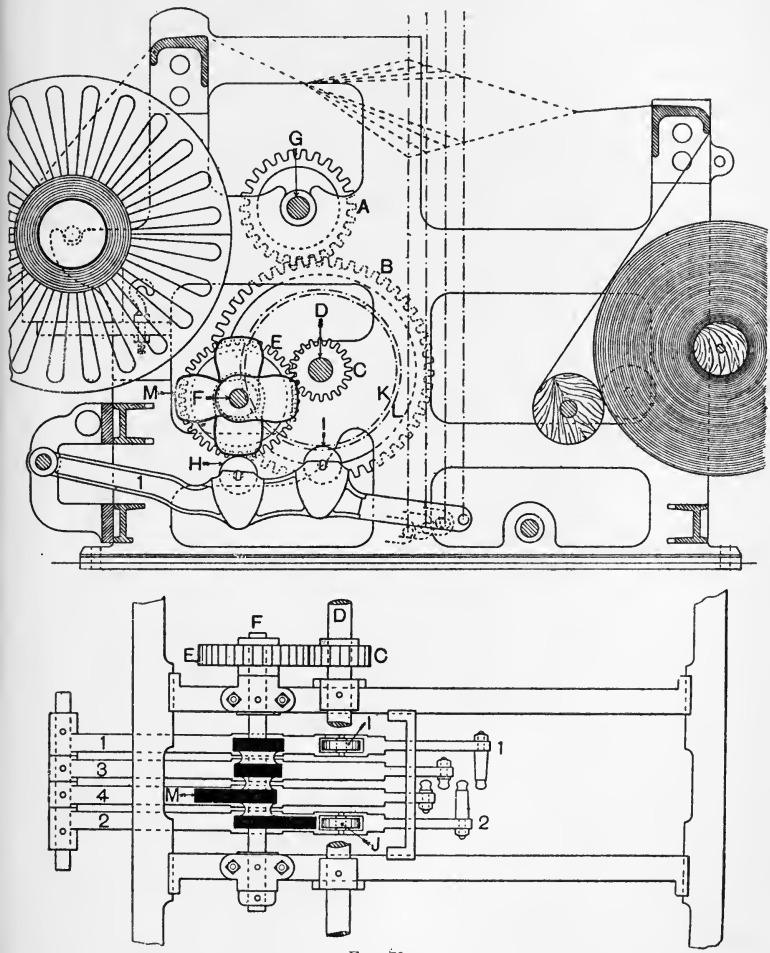

FIG. 79.

fourth the speed of the crankshaft G. The wyper in this

case is cast solid and is keyed rigidly to the shaft F, as is also the wheel E. The four blades of the wyper (shown solid black in plan, and in heavy outline in elevation) actuate the treadles 1, 2, 3, 4 through the medium of the treadle bowls H. For three-leaf work the wyper, again solid (the boss being continued from blade 2 to 3), is keyed to a separate supplementary shaft, with its proper wheel of 36 teeth, which gears with a pinion of 24 teeth on the wyper shaft. Both of the above wheels are at the opposite side of the framework to C and E. The blades of this wyper will, of course, actuate the treadle bowls H, treadle 4 remaining idle. For plain work the wyper is cast in halves. These are bolted together on the shaft D, and are held in position by means of a friction key and a set screw. They give motion to the treadles 1 and 2 through treadle bowls I and J, treadles 3 and 4 remaining idle. The dot-and-dash circles K and L represent the paths of the two blades of the plain wyper. It will be observed that, for reasons already discussed, the blade whose path is shown at L will impart a larger shed to the second leaf than K will to the first leaf; similarly in regard to the four-leaf wyper shown, the blade M imparts the largest shed.

In some cases the three- and four-leaf wypers are fixed to sleeves which rotate freely on the ordinary wyper shaft; each sleeve with its corresponding wyper is then driven at the required speed by means of suitable wheels on the wyper shaft and the tappet sleeve, and an intermediate pair of wheels on a supplementary shaft or stud. In this case it is unnecessary to lift out the wypers and shafts, and, since the wypers are near the leaves, any irregularities in their action are not multiplied to so great an extent as when they are acting nearer to the fulcrum

of the treadles, but there is sometimes a danger of the revolving wyper coming into contact with the rod which connects the back leaf of the camb to the treadle.

Fig. 80 shows the usual method of driving outside

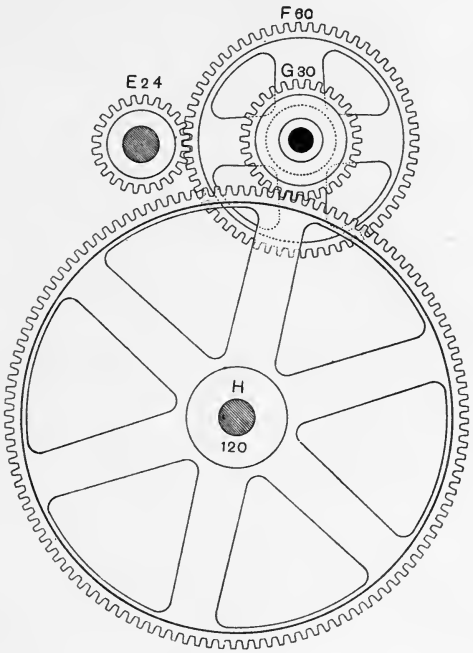

FIG. 80.

positive tappets, the train of wheels being arranged for a tappet having ten picks to the round. The pinion E of 24 teeth on the crankshaft gears with the intermediate wheel F of 60 teeth, with which is compounded the pinion G of 30 teeth, the latter in turn gearing with the wheel H of 120 teeth on the tappet shaft or stud. The

value of the motion is therefore one revolution of crank $\times \frac{24}{60} \times \frac{30}{120} = \frac{1}{10}$, or the speed of the tappet shaft one-tenth that of the crankshaft. Changes in speed may be made at any point, and, when suitable, the pinion on the crankshaft is geared direct with the wheel on the tappet shaft. For example, the pinion E and the wheel H would be a suitable gearing for a tappet of five picks to the round, no intermediate wheels being necessary.

Tappet Setting.—As has already been stated, the position of the crankshaft may vary in relation to that of the shedding wyper as regards the time of shedding. For instance, with tender yarns it may be advisable to have the crank farther forward than the point shown in Fig. 58, page 114, when the shed is closed, so that the strain upon the yarn will be reduced when the reed is beating up the weft. Also, if the cloth be heavy and the reed fine, the strain on the loom will be slightly reduced by setting the crank farther forward, as stated above, while sufficient cover or spreading of the yarn will still be obtained because of the fineness of the reed. Again, if a narrow cloth be woven in a wide loom, a similar position of the crank, when the shed is closed, will aid greatly in the production of a good selvage.

In some few cloths, for special effects, it is desired that the marks of the reed be shown distinctly, but in by far the greater majority this is considered a fault to be guarded against; and, generally speaking, to have the cloth well covered, or, in other words, the threads of the warp yarn equidistant from each other, is one of the main desires of merchant and manufacturer alike. The position of the warp line when the shed is closed, the time of shedding, and also the position of the lease rods, all aid or retard this desired result. To illustrate in what manner

the position of the warp line affects this result, Figs. 81 and 82 are introduced. In Fig. 81, when the shed is closed, the warp yarn forms a straight line from back to front, as indicated by dotted line CE, but when the shed is opened, shafts A and B are raised and depressed through equal distances, and the upper and lower portions of the shed are formed respectively by the lines CDE and CFE. The

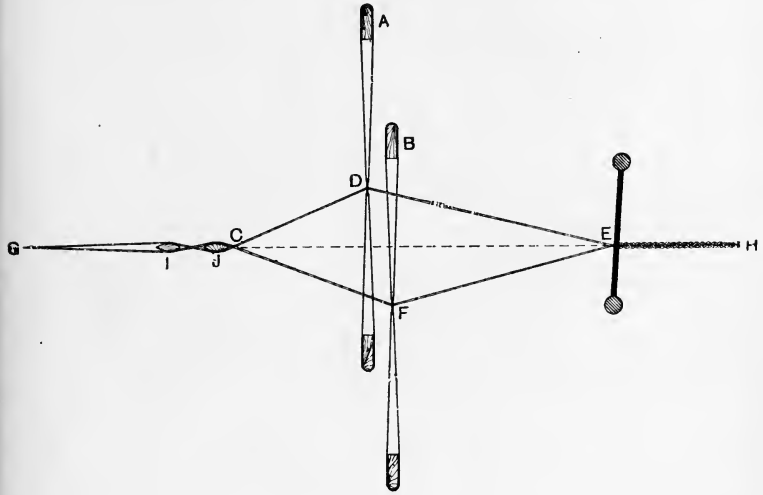

FIG. 81.

dotted line CE thus divides the shed into two equal triangles, and it therefore follows that an equal strain will be thrown upon each half of the shed. Each pair of threads, therefore, passing through their respective splits in the reed, will be retained in the position into which the reed places them when beating up, as the high tension on the yarn will permit of no lateral movement on the part of any individual thread. G and H denote respectively the

points where the yarn leaves the back rail and where the woven cloth reaches the front rail or breast beam. I and J are the lease rods.

In Fig. 82 similar letters refer to similar parts. The shafts A and B have again been raised and depressed through equal distances from the centre of the shed, the line of the warp being shown when in this position by the

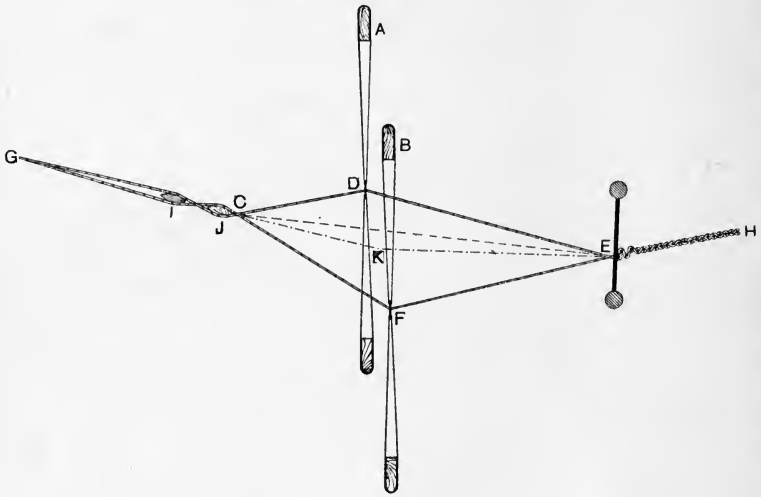

FIG. 82.

dotted line CKE, and the upper and lower portions, when open, by the lines CDE and CFE. The shed is again divided into two triangles by the line CE, which is common to both, and therefore the shortest distance between these two points. This being so, it follows that the strain upon the yarn will be least when the yarn occupies this position. But as the altitude of triangle CFE is about twice that of the triangle CDE, the lower

portion of the shed will be in great tension, while the upper portion will hang slack. This is the condition of things aimed at, and it is brought about by the raising of the back and front rails as far as may be necessary above the level of point K at the centre of the shed. In the diagram, point H has been raised about $\frac{3}{4}$ in., while point G has been raised about 4 ins. above this level. Since any alteration in the height of the point H would interfere with the position of the warp line in its relation to the race of the lay, it is advisable, when this point is once properly adjusted, that all changes be made on the back rail at G. It is seldom necessary to raise G to a greater height than is shown in the diagram.

In regard to the time of shedding, when weaving light fabrics—that is, fabrics woven in a reed of coarse set—requiring cover, it is absolutely essential that the new shed be almost completely formed when the reed is at the fell of the cloth, and thus beating up the last shot on a crossed shed. To obtain this it may be necessary to adjust the shedding wypers level when the crank has just passed the bottom centre. The position of the crank when this condition obtains should be as already shown in Fig. 58, point 1, page 114. The result of this will be that as the reed carries the last shot of weft to the fell of the cloth, it will carry with it a certain portion of the slack from the top half of the shed, which permits of each alternate slack thread adjusting itself midway between the adjacent threads which are under extreme strain. Cloth woven under these conditions always presents a raw, irregular appearance in front of the reed (as indicated near E, Fig. 82), but this irregularity gradually disappears, and eventually the cloth assumes a practically perfect state. If shedding be too late, the inequality of the strain upon the two parts of the

shed is reduced to such an extent that the tendency of the threads of the upper part to adjust themselves is considerably diminished.

CHAPTER X

SUPPLEMENTARY SHEDDING MOTIONS

ALL negative shedding motions require some supplementary mechanism to return the camb leaves to their original position when released by the shedding motion proper. This in its simplest form is an arrangement of spiral springs, and these (where the system of compensating rollers is not applicable), because of their simplicity and ease of adjustment, are undoubtedly the best. The system of overhead compensating rollers should, however, be applied in all possible cases, as it converts an otherwise negative action into a perfectly positive, and at the same time ideal, shedding motion. To obtain the full advantage of such a motion, however, it is essential that the rollers should be designed to take up exactly the same amount of shed as that given off by the wypers with which they are intended to work in conjunction. Fig. 83, besides illustrating most of the loom parts in relation to each other, shows how the compensating rollers or top rollers are arranged for two shafts. X and Y are parallel rollers, the difference in their diameters being due to the fact that the camb leaf W attached to the roller X receives, for reasons already stated, a greater travel than leaf V attached to roller Y. Attention is, however, drawn to the fact that this consideration, as well as the effect of the thickness of the

connecting strap, will be neglected in the following further explanation of these motions. X and Y being set-screwed on the roller shaft T, it follows that any downward movement of the leaf W will produce a corresponding upward

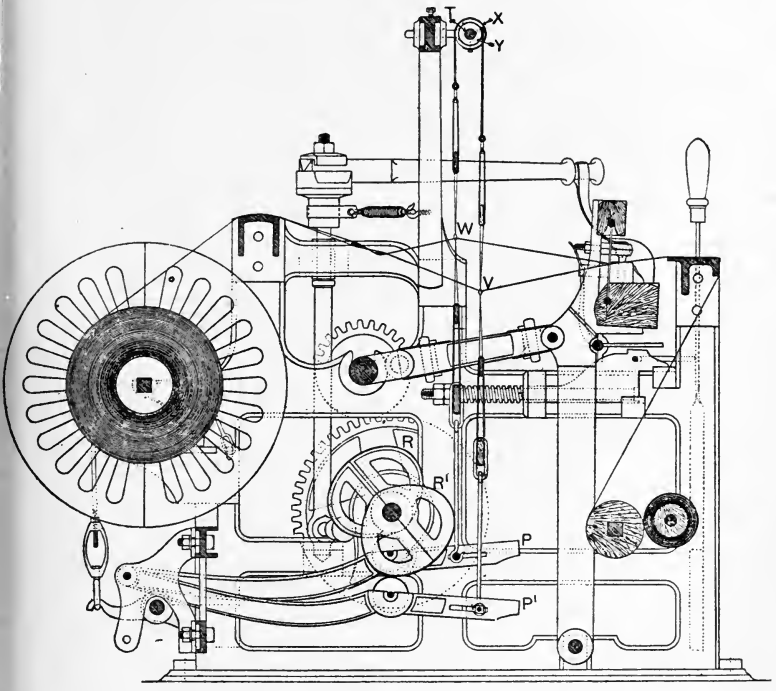

Fig. 83.

movement of the leaf V; and, *vice versa*, any downward movement of V will give a similar upward movement to W, as shown. The shedding wypers R and R^1 are constructed to actuate the treadles P and P^1 in perfect harmony, so as to produce the desired movement in the camb leaves W and V.

Figs. 84 to 87 are introduced to aid in the explanation of the action that takes place in the camb rollers for a three-leaf twill, $\frac{2}{1}$. In Fig. 84 the leaves 1 and 2 are up, and the leaf 3 is down. K and L are the shed lines, 5 ins. apart; M is a line $2\frac{1}{2}$ ins. above L; and N $2\frac{1}{2}$ ins. above M. The rollers O and P are fixtures as regards vertical movement, their diameters being in the proportion of 1 to 2 respectively. The rollers R and S are equal in diameter, and are suspended from the roller O. In Fig. 86, the next actual step in the weaving process, leaves 1 and 3 are up,

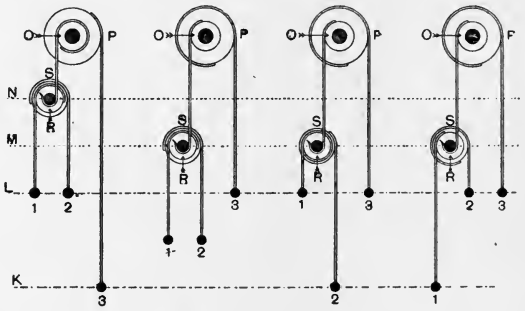

FIG. 84. FIG. 85. FIG. 86. FIG. 87.

while leaf 2 is down. How this is accomplished will be better understood by reference to Fig. 85, where the leaf 3 is represented as having moved upwards 5 ins., the roller P revolving through the same distance. The roller O being compounded with, but only half the diameter of, the roller P, allows rollers R and S, and therefore leaves 1 and 2, to fall only $2\frac{1}{2}$ ins. as shown. Leaf 2 is, however, pulled down to the bottom shed line K, which movement raises leaf 1 to its proper position by means of the rollers R and S, as shown in Fig. 86. It must not be understood that leaves 1 and 2 ever assume the position represented in

Fig. 85, this figure being introduced for explanatory purposes only; the change of position from Fig. 84 to Fig. 86 is made in one continuous movement. In Fig. 87 the leaves 2 and 3 are up, and the leaf 1 is down. In this change the downward movement of leaf 1 has simply produced an equal but upward movement in leaf 2.

Figs. 88 to 90 are explanatory of the four-leaf twill motion, $\frac{3}{1}$. K, L, M, and N represent the same positions as in the preceding figure. The roller O simply rotates, while the rollers Q R and S T, of equal diameters, may be

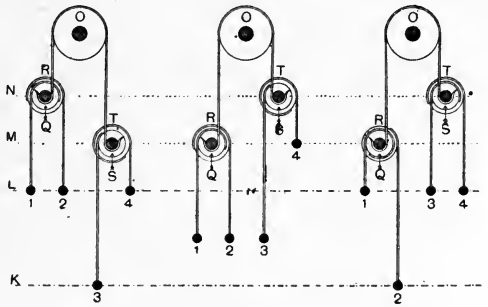

Fig. 88. Fig. 89. Fig. 90.

raised or lowered at will. The change from 1, 2, and 3 up and 4 down to the position shown in Fig. 88 is a simple movement already explained. The change from Fig. 88 to Fig. 90 is again, in actual work, one continuous movement, Fig. 89 being introduced for explanatory purposes. Here the roller O has revolved through $2\frac{1}{2}$ ins. (from its position in Fig. 88), raising the rollers S and T, and lowering rollers Q and R, through equivalent distances ($2\frac{1}{2}$ ins.). This would bring leaves 1 and 2 to the centre of the shed, and leaves 3 and 4 to the position shown; leaf 4 is, however, retained at the line L, which causes the leaf 3 to be

raised to the same level, while leaf 2 is taken to the bottom line, at the same time returning leaf 1 to its position on line L.

In Figs. 91 to 93 (explaining the action in a five-leaf twill, $\frac{4}{1}$) K and L are again the shed lines, 5 ins. apart, the two lines A and B dividing the shed into three equal parts of $1\frac{2}{3}$ ins. each, while lines C to H represent positions also $1\frac{2}{3}$ ins. apart. In Fig. 91, where leaves 1, 2, 3, and 5 are up and 4 down, the first two are suspended from rollers

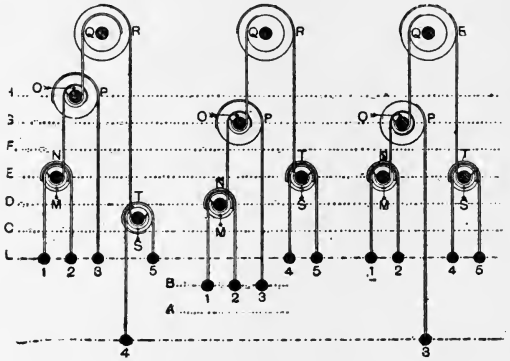

FIG. 91. FIG. 92. FIG. 93.

M and N of equal diameters, these in turn being suspended from the roller O compounded with the roller P, to which is attached the leaf 3. The diameters of O and P are in the ratio of 1 to 2. These three leaves (1, 2, 3) are attached to the roller Q, with which is compounded the roller R, these two latter having diameters in the ratio of 2 to 3. Leaves 4 and 5 are suspended by rollers S and T (of equal diameters) from the roller R. Q and R simply rotate, while the others may be raised or lowered at will. In this figure it will be observed that the rollers S and T

occupy a position midway between lines C and D. The leaf 4 rises to the line L (5 ins.) and allows the rollers S and T to rise to the line E, a distance of $2\frac{1}{2}$ ins. (*i.e.* $\frac{5}{6}$ in. $+ 1\frac{2}{3}$ ins.); roller R will therefore rotate $2\frac{1}{2}$ ins., but roller Q—being only two-thirds the diameter of roller R—will give off only $1\frac{2}{3}$ ins. ($2\frac{1}{2}$ ins. $\times \frac{2}{3} = 1\frac{2}{3}$ ins.) of strap, allowing rollers O and P, and therefore leaves 1, 2, and 3, to fall through this distance, as shown in Fig. 92. Leaf 3 is, however, taken down to the line K, a further distance of $3\frac{1}{3}$ ins. ($1\frac{2}{3}$ ins. $+ 1\frac{2}{3}$ ins.), and in doing this returns leaves 1 and 2 to the line L ($1\frac{2}{3}$ ins.), through the medium of rollers P and O, whose diameters are as 2 to 1 as stated. This action places the leaves in the positions shown in Fig. 93. The further motions in the five-leaf twill are, as already explained, under the three-leaf twill, and need not be recapitulated. Any practicable number of leaves may be similarly connected, and the diameters of the rollers compounded with each other will always be in inverse proportion to the number of leaves suspended from these rollers. Arrangements of this type necessitate the same number of leaves being raised each pick, but the numbers lifted are not restricted to those illustrated. The mounting illustrated in Figs. 84 to 87 is suitable also for $\frac{1}{2}$ twill; the $\frac{2}{2}$ twill requires simply two rollers, or it may be woven with the mounting illustrated in Figs. 88 to 90, and so may the $\frac{1}{3}$ twill. Similarly, any five-leaf weave, with a constant number of leaves lifted on each pick, can be woven with the mounting illustrated in Figs. 91 to 93. Should this uniformity of lifting not obtain, it is still possible in nearly every case to employ similar mountings, provided a special tappet be used to actuate an extra treadle for the purpose of raising and lowering all leaves from one imaginary "level" position to another.

The above motions, although excellent in principle, are seldom used where the number of leaves employed exceeds five, as they then become cumbersome and difficult to adjust; even for five leaves springs are in many cases considered preferable. In all cases where this number of leaves is exceeded, and in most cases where the number of leaves lifted varies throughout the weave, springs are invariably adopted as the supplementary shedding motion for negative tappets or dobbies. When used in conjunction with inside negative tappets the springs are supported in a simple framework bolted to the top rail of the loom, and they usually exert a direct pull on the leaves, two springs being allotted to each leaf. An improved spring-top motion, termed the "Climax," and made by Messrs. Lupton and Place, Burnley, is illustrated in Fig. 94. Each camb leaf is connected to two levers AB, A′B′, etc., all of which are fulcrumed at C and D. Each lever has a curved projection E and F which replaces the usual toothed segments. Opposite levers of each succeeding pair are connected by means of a strong spring—thus, A′ is connected to B—and the continuations E and F are reversed in position in each succeeding pair of levers in order that the one spring G may act upon all four levers and upon two contiguous leaves of the camb. The levers are arranged one straight and one hooked on, say, the left hand, and one hooked and one straight on the right, and, if necessary, double springs may be attached. Adjusting plates H are provided with pins at J and K which fit into the corresponding guide slots in the levers; the plates themselves keep the levers parallel and facilitate smooth working. The whole is bolted to the loom frame at L and M. Handle N is used to extend all springs, and so bring all the leaves of the camb to the same level for the purpose of repairing broken

threads. Where, however, the shedding motion is an outside negative tappet, or a negative dobby, an under-motion similar in some form or other to that shown in Fig. 95 is usually adopted. Connections from the camb

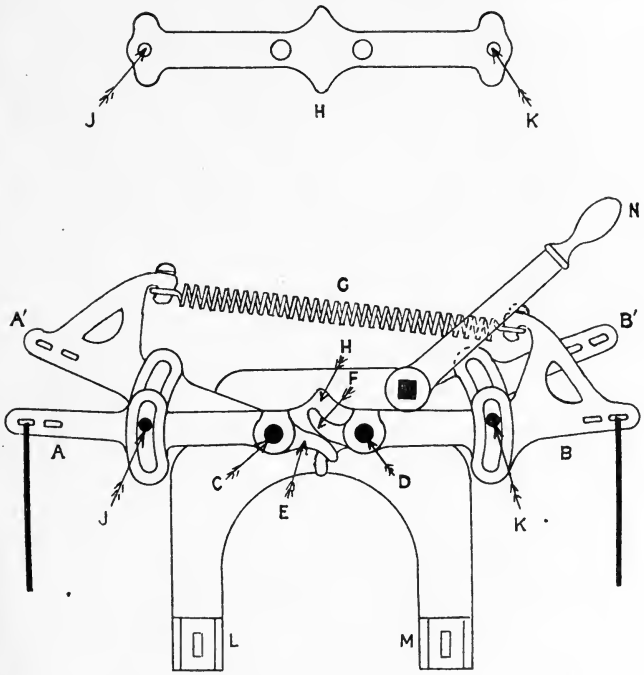

FIG. 94.

leaf above are attached to the outer ends of the spring levers A. These are fulcrumed at B, and geared together by toothed arms C, which secure equal lifts at A. In the majority of similar under-motions, springs D are connected to the framework vertically under their points of connec-

tion E. Here, however, the springs occupy a diagonal position, being hooked to the adjustable bar F in the centre of the framework. This bar provides to some extent a means of increasing or decreasing the tension of the springs in action. The main feature of the arrangement, however, is the diagonal position of the springs. It is obvious that, as the lever A rises, the line of springs D will move towards the fulcrum B, and will thus minimise the stretch of the spring. Moreover, due to this position and to

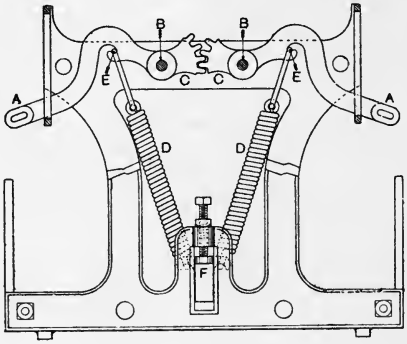

FIG. 95.

the peculiar shape of the levers A, a decided mechanical advantage is obtained, as with the upward movement of the leaf, leverage is increased at A and decreased at E. Provided it were possible in actual work to lift A until the centre line of the spring D passed through the centre of B, the pull of the spring D on the lever A, and therefore on the corresponding leaf, would be zero. In the figure, each arm A is provided with a spring D; but where desirable or necessary, each pair of arms may be controlled by a single spring, these being attached alternately right and left to each succeeding pair of levers.

A modification of Kenyon's well-known spring under-motion is shown in Fig. 96, adapted for looms of 45-in. reed space and over. It consists of a series of segment levers G, G, arranged in pairs, and connected together by links and the spiral spring H. From the outer end of each lever, connections to the leaf I above are taken, and as the latter rises, the spring H is slightly distended, but at the same time advances towards the line of the fulcra J, J, round which the levers G move. From this it is obvious that the leverage of the spring H on the lever

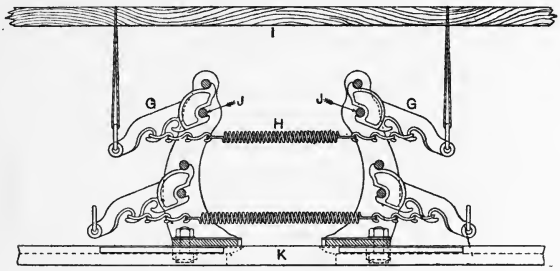

FIG. 96.

G, and therefore the pull on the leaf I, is greatly reduced. The levers G are so constructed that any one may be readily removed and replaced without disturbing any other. They are arranged in tiers in suitable frames, which may be adjusted on the rail K according to the width of the loom.

Fig. 97 shows an under-motion (also arranged for wide looms), the principal feature of which is an eccentric E round which a strap G is passed, connecting the outer end of the levers B with the tension spring F; F in turn being attached to the inner end of B by a link and thumb-screw I. This arrangement affords a means of increasing or

decreasing the tension on F. The levers B are fulcrumed

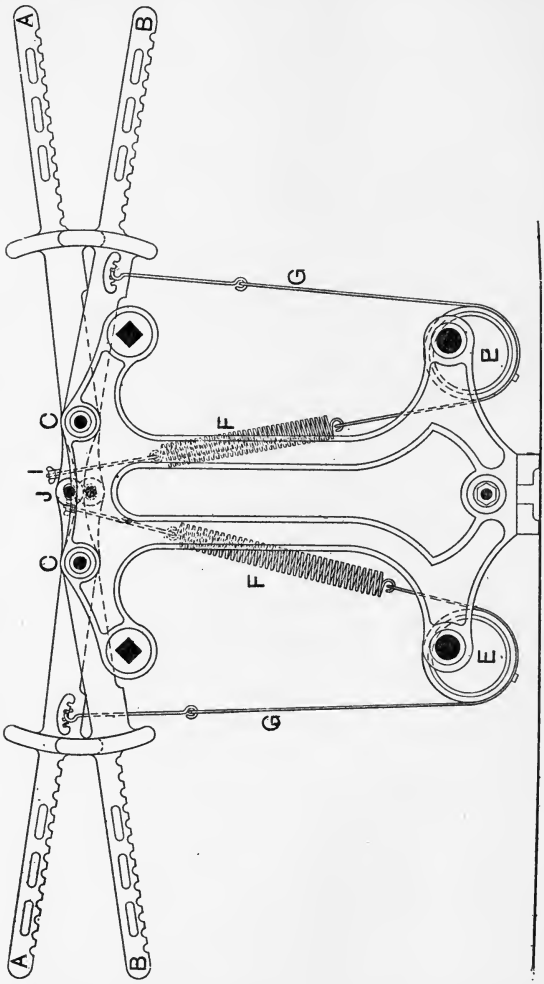

FIG. 97.

at C, and their inner ends are connected at J by a pin or

knuckle joint. The arrangement of parts is such that for a lift of 5 ins. of the leaf the spring F is distended only about $\frac{3}{4}$ in. This advantage is due to the fall at I and to the action of the eccentric E in winding the strap on its

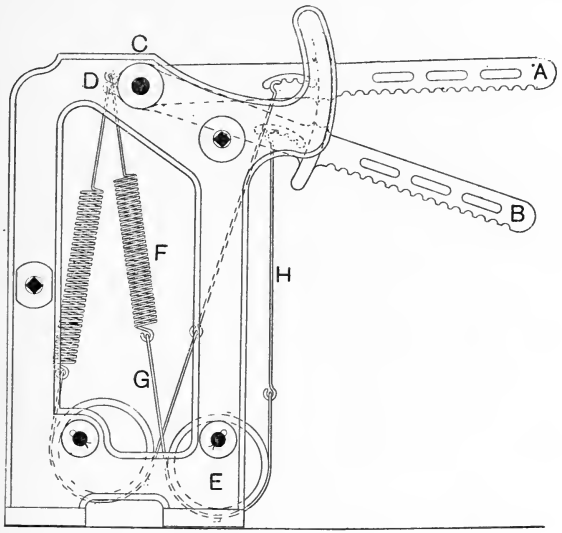

Fig 98.

thin part while unwinding from its thick part. Fig. 98 shows a similar arrangement for narrow looms.

CHAPTER XI

DOBBY SHEDDING

Dobby machines are utilised as shedding mechanisms for patterns of a character (generally symmetrical) which are

beyond the scope of an ordinary tappet, and which may be more economically produced by the dobby than by a jacquard machine. Although positive tappets may be built to weave cloth the design of which occupies as many as 32 picks to the round, it is generally advisable to utilise the dobby when the picks in one repeat of the pattern exceed the limit of an ordinary negative tappet (which is about twelve), although the number of leaves required may be as few as four, the principal benefit of the dobby being that there is practically no limit to the number of picks in a repeat. Dobbies are built variously to actuate from 8 to 48 leaves, and also according to the weight or class of work required. This maximum number of leaves is rarely used even in the woollen, worsted, and cotton industries, scarcely ever for linen fabrics, and never for jute goods. Dobbies capable of operating 12 leaves for jute and 20 leaves for linen are quite large enough for satisfactory work, and provide means for developing a fairly extensive range of designs.

Figs. 99, 100, and 101 show respectively side, front, and sectional elevation of a bottom shedding dobby as usually applied to hand looms for pattern work. The griffe or block A is actuated by means of a foot treadle through the cord B, lever C, and pendant arm D, the vertical movement being ensured by the spindles E, which pass through the lugs F cast on each end of A. The lifting knife G is rigidly fixed in, and therefore moves with the block A, taking with it the selected hooks H. The catch I, in the upward movement of the block A, to which it is attached, takes hold of the projecting pins J fixed in the star wheel K on the head of the lag barrel L, and causes it to rotate one-eighth of a revolution each time. The lags M, which pass round and take into the grooves of the barrel L, are

thus brought successively into position. As shown in Fig. 101, the normal position of the hook H is off the knife—*i.e.* not in the same vertical plane,—and therefore, if

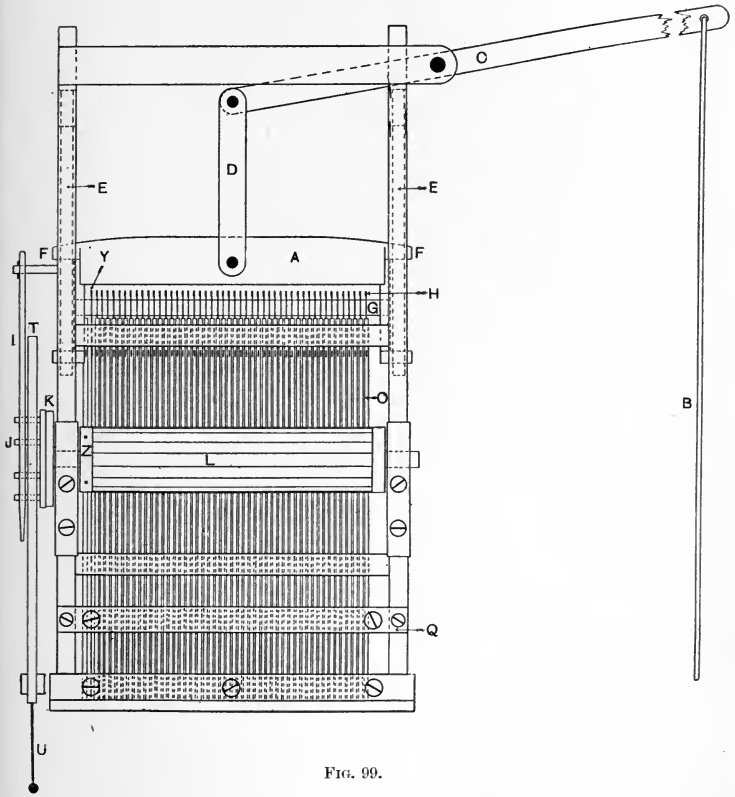

FIG. 99.

allowed to remain in this position, will not be affected by the upward movement of G. By means of a cross-wire or needle N the hook H is attached to a vertical flat spring O, against which the pegs in the lags M press. One lag is

necessary for each pick of the design, and each lag is

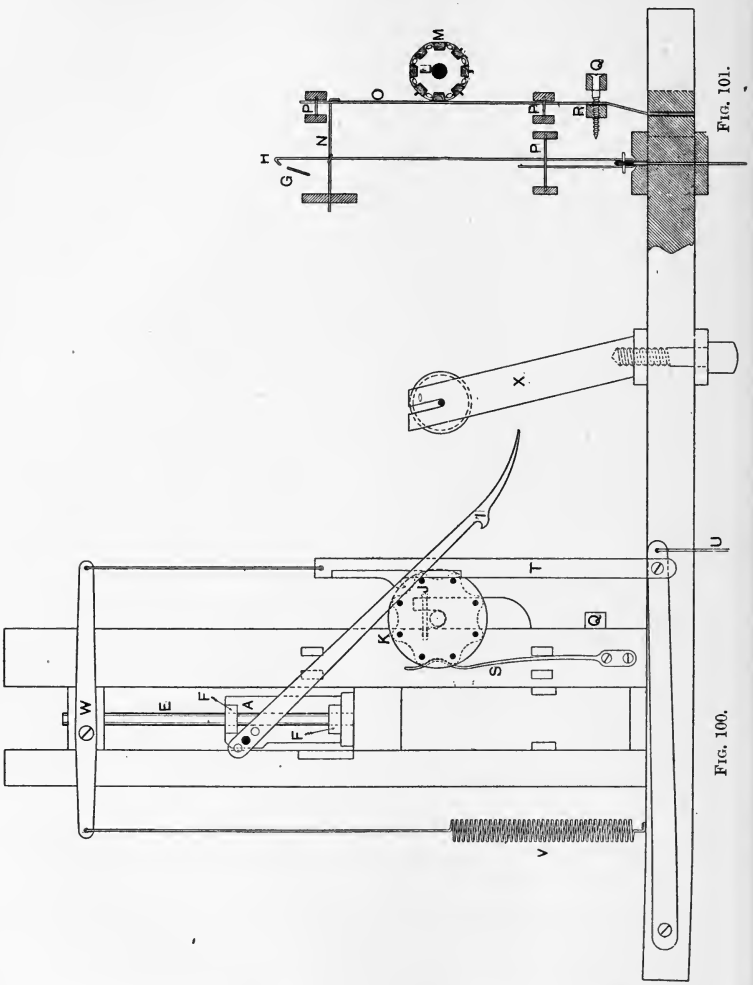

Fig. 101.

Fig. 100.

pegged according to the order of lifting necessary for that

pick. It is obvious that a peg pressing against the spring O will, through needle N, cause the hook H to occupy a position over the knife G, which in its upward movement will lift the hook H and the camb leaf attached below. When the knife G descends, the hook H is released, and the spring O returns it to its normal position, unless it is required to rise again for the following pick. P, P, P are horizontal grates for the guidance of the hooks H and springs O, and the tension or spring of the latter may be adjusted by screws in the bars Q and R. Any vibration or rocking of the barrel L, when not turning, is prevented by the spring S, the end of which is shaped to coincide with the star wheel K. Lagging back or reversing is accomplished by the catch T and cord U, while the spiral spring V and the lever W, with their connections, keep the catch T clear of the pins J when working in the forward direction. When the lags M form a chain of any considerable length they are passed round and kept taut by means of a roller in the adjustable carrier X.

The first hook Y in the machine is arranged to work a "catch-band" or selvage thread at each side of the cloth by means of pegs Z fixed in the end of the barrel L. Under certain circumstances, such as picking twice in succession from the same end, this arrangement of selvaging ceases to be effective; but the objection can be overcome by making the pegs movable instead of fixed, so that different arrangements of lifting this thread may be obtained. A further improvement, now introduced, is the addition of a second hook for this purpose, so that a proper plain or other selvage can be woven without its being necessary to peg and arrange for the same on the lags.

Fig. 102 shows one method by which the lag cylinder or barrel L of the machine illustrated in Fig. 100 may

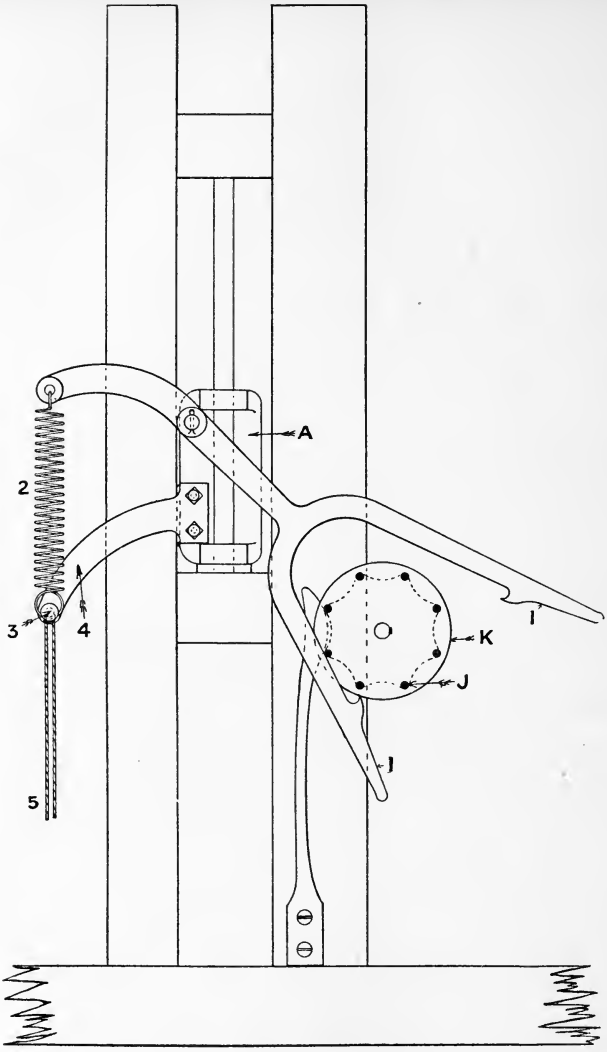

Fig. 102.

be rotated in either direction at will, and a considerable saving therefore effected in the pegging of lags for patterns which are perfectly symmetrical in the way of the weft, *e.g.* those illustrated in *Textile Design: Pure and Applied*, pages 109 to 130. In Fig. 100 the catch I is shown as resting by gravitation on the upper side of the pins J which project from the cylinder head K; consequently, as the block A rises, the cylinder is rotated always in a counter-clockwise direction. In Fig. 102, however, the catch I is forked, and, as desired, either its upper or its lower hook may be caused to operate on the pins of the cylinder head. The catch is fulcrumed loosely on a stud which is fixed in the lifting block A; it is, in this case, however, continued to the left beyond the stud, and a light spiral spring 2 attached which may be readily hooked over the stud 3 in the bracket 4—also bolted to block A—in order that the lower side of the catch I may be caused to operate, and thus rotate the cylinder in a clockwise direction. The cord 5 is attached to the spring 2, and falls to the weaver's hand so that he may readily hook or unhook the spring, and thus place the catch I in the desired position.

Positive Centre Shedding Dobby.—For the heavier fabrics it is advisable that the shedding should be positive. A dobby of a positive centre shed type for heavy fabrics, and constructed by Messrs. Charles Parker, Sons and Co., is illustrated herewith. Figs. 103 and 104 show in front and side elevations general views of the knives, hooks, and connections to the camb leaves. The lifting knife A and reciprocating grate B (fulcrumed at C and D respectively) are so connected that they continually move in opposite directions—*i.e.* as A rises, B falls, and *vice versa.* Each camb leaf E is connected to two hooks F and G—to F from the underside by cords passing round the guide

pulleys H and attached to a flat bar I, which in turn is

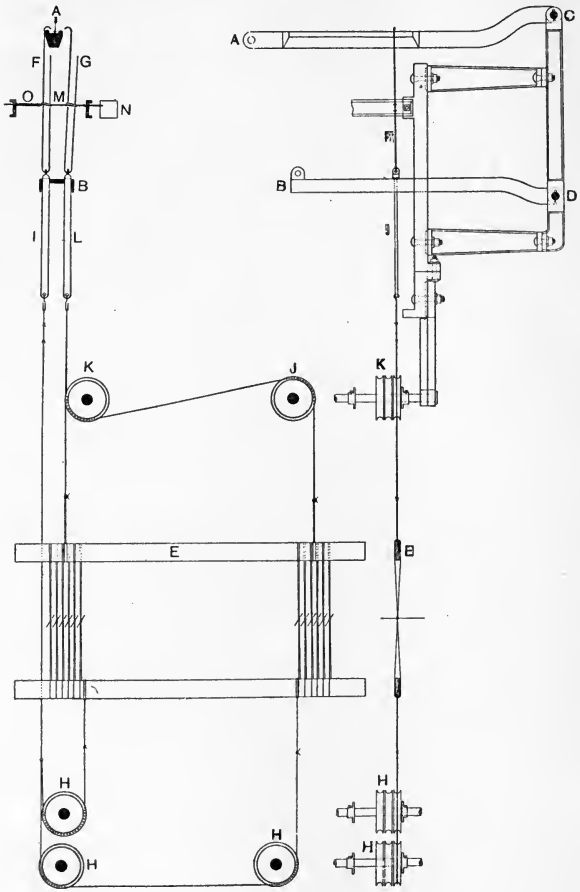

Fig. 103. Fig. 104.

hooked on the lower end of F; and to the hook G from the upper side by cords passing over J and under K to a

similar bar L hooked to G. The bars I and L slide freely in corresponding slots in the grate B, and are provided with a shoulder at their upper end which keeps in touch with B when falling, and by which B lifts them when rising. The hooks F and G are controlled by one needle M in such a manner that both cannot be over the lifting knife A at one time; they are thus free to move in opposite directions. If, therefore, as in the figure, F be over the knife and be taken up with it, the leaf E and hook G are pulled down in a corresponding degree, the latter being permitted to fall by the downward movement of the grate B. It is apparent that as hooks F and G are level, the knife A and grate B are in their lowest and highest positions respectively. The respective positions of the hooks F and G are determined by means of cards passing round the cylinder N. A hole in the card opposite the point of the needle M permits the needle to enter the cylinder as the latter advances, and the hook F will be lifted. If, on the other hand, a blank card be presented, the needle M will be pressed back by the advancing cylinder, thus placing hook G over the knife, and forcing F clear. The spring O always tends to place the hook F over the knife, unless prevented by the card on the cylinder, as stated. It will thus be seen that a hole in the card means a falling leaf. Being a centre shedding dobby, all hooks, and therefore all leaves, are brought level after each pick. Guide pulleys J and K revolve freely on studs carried by brackets bolted to the top girder rail of the loom; while pulleys H revolve on similar studs carried in special frames usually fixed to the floor.

The method adopted for driving the dobby is shown in Fig. 105. The connecting rod P (provided with a union screw for adjusting the level of the lifting knives) imparts

motion from a crank or eccentric on the crankshaft to the outer arm of the lever Q, fulcrumed at R, the extremity of its inner arm being connected to the lifting knife A by the vertical connecting rod S. A method of driving is sometimes adopted which imparts a partial dwell to the leaves when the shed is open. The reciprocating grate B receives its motion from the same lever Q, through the

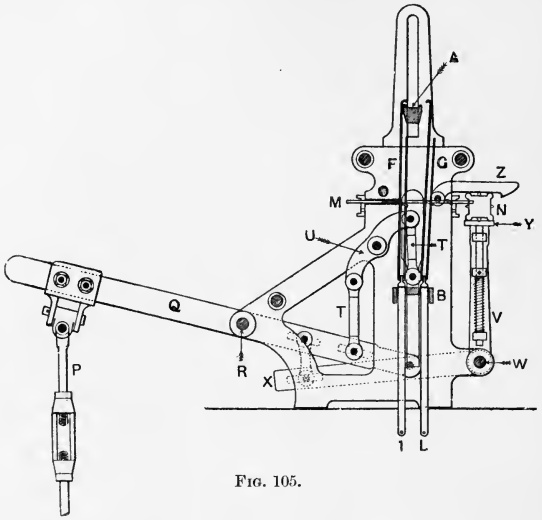

FIG. 105.

rods T and lever U. This will be better understood by referring to Fig. 106, where the solid lines represent the machine when the lifting knives are level, and the dotted lines similar parts when the shed is open. In consequence of the necessary clearance between the knife A, when horizontal, and the hooks, the knife A will commence to rise before the hooks which are to be lifted, although those hooks which are required to be down will commence to fall simultaneously with both the upward movement of A and

the downward movement of B. Apart from this, however, the connections clearly show that any upward movement imparted to A will produce an approximately equal but downward movement in B. A and B in the figure have been moved through an angle of 90° from their true position.

Referring again to Fig. 105, the card cylinder N is

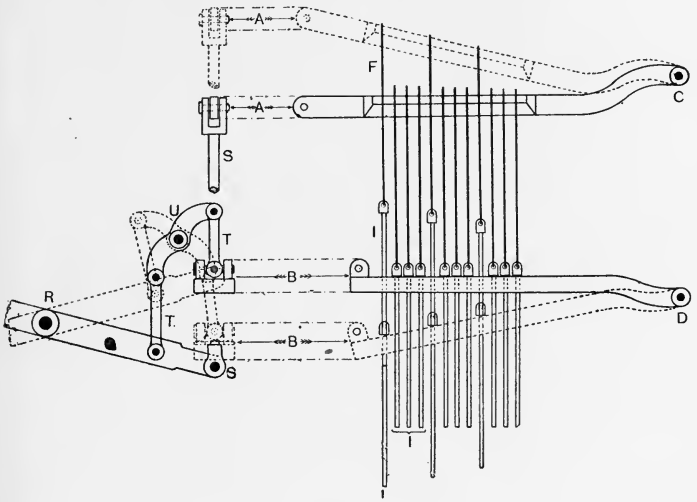

FIG. 106.

supported at each end by similar arms V set-screwed to the rocking shaft at W, motion to which is imparted by the lever X connected to the lever Q, as shown. An ordinary spring hammer Y is introduced to aid in levelling the cylinder and in preventing vibration when selecting the hooks. The downward movement of the rod P raises the lever X, throws out the arms V and the cylinder N, the corner of the latter, in its outward movement, being caught

by the catch Z and forced to rotate towards the needles. The cylinder N is double-decked—*i.e.* provided with two

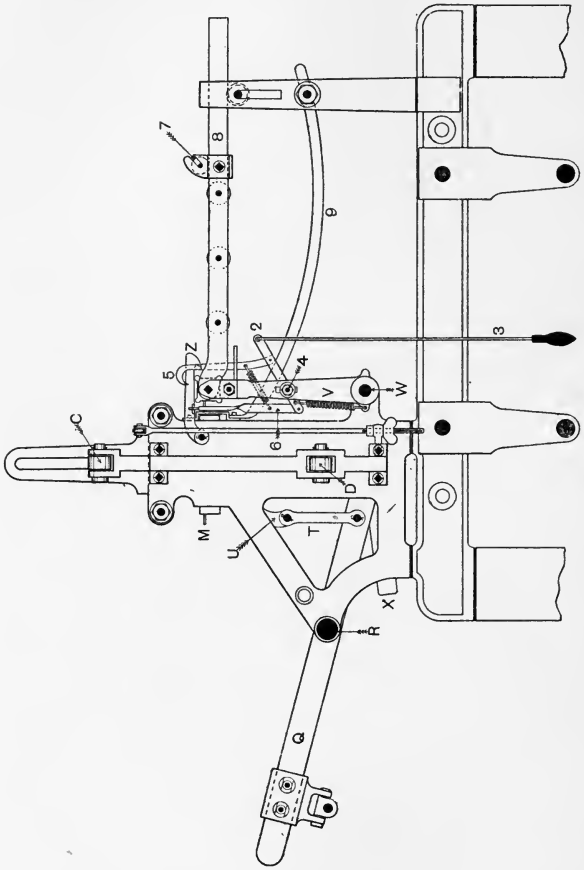

Fig. 107.

rows of holes on each face,—and may thus be adapted for cross-border or similar work, such as seamless bags. When intended for this kind of work, either the needle-plate must

be depressed or the cylinder N raised, so that the bottom row of holes may face the needles. To effect this change slight additions to the machine are necessary.

The arrangement for reversing the cylinder is shown in the front view of the dobby in Fig. 107. The lever 2, actuated by the cord 3 and fulcrumed at 4, carries the pulling catch 5 and lifting bar 6. The cylinder N, being thrown out clear of the needles, is reversed by pulling down the cord 3, and therefore the catch 5, the lifting bar 6 meanwhile raising the catch Z clear of the cylinder. Short chains of cards are kept taut by means of a roller 7 carried by adjustable brackets on sliding rods 8, which move in and out with the cylinder N. Long chains of cards are wired and pass over the roller 7 from the card race 9.

Keighley Dobby.—Since its introduction by Messrs. George Hattersley and Sons about the middle of last century, the Keighley dobby in its various forms has been exceptionally successful in obtaining wide recognition and extensive adoption. Especially is this the case for light and medium goods, as for these classes of fabrics there are probably more dobbies in use of this type than of any other. Although machines on this principle are made by several different firms, their general characteristics are in all respects the same, and will be readily understood from the following illustrations and description of those made by Messrs. Ward Brothers, of Blackburn. Fig. 108 is a sectional elevation of a right-hand, double-lift, negative open-shed dobby, viewed from the front of the machine. Being a double-lift machine, motion is imparted from a crank on the bottom or wyper shaft, through the connecting rod A, to the ⊣ lever B, the rod A being connected to the lever by a universal swivel joint. The lever C

corresponds with the arms of the ⊣ lever B at the other side of the machine, both being outside the framing, keyed to shaft D, and therefore moving in unison. Each arm of the lever C, and the corresponding arms of the lever B, carry near their extremities an eye-bolt E, through the eye of which the end of the corresponding horizontal drawing knife is passed; each eye-bolt being also attached to an arm of the driving lever by a knuckle joint F. The camb leaves are attached by straps or cords to the long arms of the bell-crank lever G, fulcrumed at H, and con-

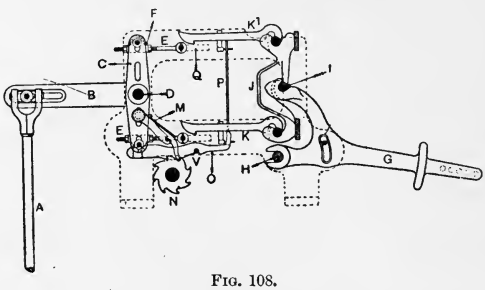

FIG. 108.

nected at I to the beam levers J, the drawhooks K and K¹ being connected to the levers J as shown. The octagonal lag or pattern barrel L is driven negatively from the lower arm of the lever C by the pushing pawl M, which, through the ratchet wheel N at the head of L, turns the latter one-eighth of a round every revolution of the wyper shaft. It will thus be seen that one lag determines the position of the levers G for two picks, and therefore effects an economy in the number of lags. The drawhooks K, K¹ are supported by the inner arms of the levers O and O¹, the top hook by means of a steel needle P, and the bottom hook direct by a suitable bend on the arm of the corresponding lever. The fulcrum V of the levers O, O¹ is so situated, and the

outer arms of the levers so weighted, that the tendency of these levers is always in favour of keeping the drawhooks K, K^1 clear of the horizontal drawing knives. In their normal positions the outer arms of O, O^1 will rest on the lag barrel, and so long as the corresponding hole in the lag remains unpegged, no change in the position of the drawhooks will take place, the knives simply moving to and fro in the guide slots Q in the framework. If, however, a lag be pegged, the outer arm of the corresponding lever O or O^1 will be lifted, the inner arm will fall, and at the same time the supported drawhook will fall over

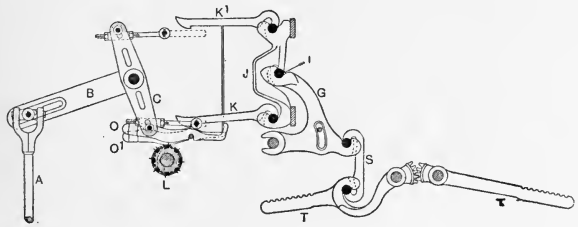

FIG. 109.

the drawing knife as shown in Fig. 109. When this occurs, the driving crank on the wyper shaft will be at, or near, its bottom centre, and will have caused the arms of the evers C and B to place the drawing knives in the positions indicated. From the figure it will be seen that it is the lower drawhook K that has come into contact with the drawing knife, the top hook K^1 being still clear, due to the fact that no peg has been inserted in the lag at the position immediately underneath the lever O^1. The crank, in moving from the bottom to the top centre, reverses the positions of the arms of the levers C and B, and therefore of the drawing knives, as shown in Fig. 110. In perform-

ing this change the lower end of beam lever J is withdrawn from R^1, at the same time raising the bell-crank lever G and the leaf attached. R and R^1 are parts of the framework which are utilised as fulcra for the ends of the beam lever J; when K^1 is in action R^1 is the fulcrum, and when K is in action R is the fulcrum. When the crank again reaches the bottom centre, the lag barrel will have been rotated one-eighth of a revolution clockwise, and a peg will be under each lever O and O^1, and both drawhooks will fall, and be acted upon in turn by their respective drawing knives. When this occurs—*i.e.* when a leaf has

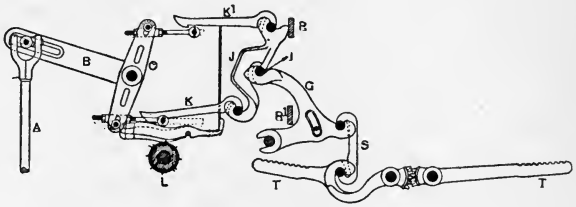

FIG. 110.

to be up for two or more picks in succession—the beam lever J simply moves about its connection with the bell-crank lever G at I, imparting little or no movement to the latter lever. With the bell-crank lever G prolonged, as in Fig. 108, the connection to the leaves must be by means of bow bands; but with connections S and T, as in Figs. 109 and 110, a more direct and steady lift is obtained. By making the connections to the leaves nearer to, or farther from, the extremities of the levers T, a varied lift may be acquired. Variation of lift may also be obtained by adjusting the knuckle joint F in the slots of the driving levers C and B.

A further decided improvement in the double levers by

Messrs. Lupton and Place, Limited, Burnley, is illustrated in Fig. 111. Here it will be seen that the movement of the levers is obtained without the usual toothed gearing shown in Fig. 110. The drawhooks, beam lever, etc., are practically unaltered except at the fulcra, but the outer jack or bell-crank lever G, while being fulcrumed as before at H, is prolonged so as to connect directly with one end of the leaf, while the link S conveys the movement to

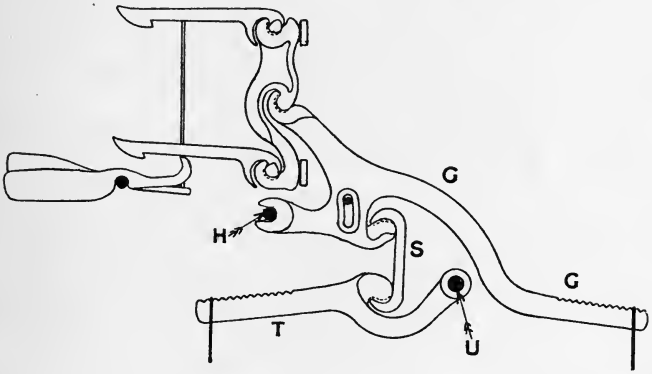

Fig. 111.

an inner lever or jack T, fulcrumed at U, which connects with the other end of the leaf.

Fig. 112 shows a weave pegged for 16 leaves, 8 picks to the round, complete on 4 lags; but since the barrel is octagonal, 8 lags would be necessary to complete a chain. The second 4 lags would be similar in every respect to those shown. The pegs on the barrel L (beginning with that peg under lever O) represent the first thread of the weave—picks A to H twice over. The arrangement of pegging as shown in Fig. 112 is, however, suitable for a left-hand loom only. When pegging for a right-hand loom

it is necessary to commence from the opposite side—*i.e.* the right-hand side. But in some dobbies—as, for instance, Parker's centre-shed dobby, Figs. 103 to 107—the cards for a right-hand dobby are at the right side; therefore the cutting must be commenced at the left. Then, again, some dobbies have two sets of cards or lags, one set on each side, in which case one set of lags commences from the right-hand side and the other set from the left. The different positions of the lags are such as to cause confusion,

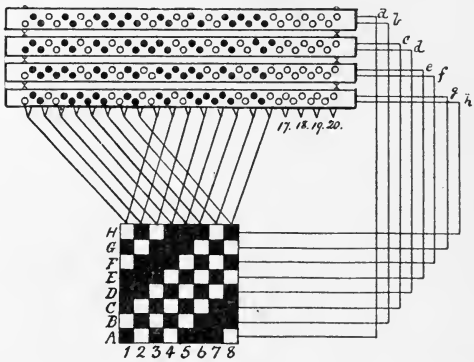

FIG. 112.

but a simple rule to observe in pegging is first to notice on which side of the dobby the lags hang, and then to commence pegging from the opposite hand. Thus, if lags hang at the right side of the dobby, commence pegging from the left-hand side; if lags hang at the left side of the dobby, commence pegging from the right-hand side; or, what is equivalent, commence at the left side with the last lag instead of the first.

As already stated, dobbies of the type of that described above are very suitable for most classes of light and

medium work, but in many cases, and for all heavy fabrics, it is advisable, if not essential, that the shedding motion should be of a positive nature. Figs. 113 and 114 are illustrative of the positive open-shedding dobby made by Messrs. George Hattersley and Sons, Limited, Keighley. In general the principle is the same as in the original dobby, while the main differences in detail are due to the changes necessary for a positive tread. Motion, as before, is imparted by a crank on the bottom or wyper shaft through a suitable rod to the ⊣ lever A fulcrumed at B, each arm C and D of this lever being connected near its extremity to two blades or knives EF, E^1F^1, by means of the connecting rods G and the eyebolts H. From the arm D, rod I, lever J, and pulling catch K, the octagonal lag barrel L is rotated as before: the rollers M serve to guide the lags clear of the arms of the levers which connect with the underside of the camb leaves, these levers (N, Fig. 114) being double bell-cranked and fulcrumed at O. As in the negative dobby, these levers (usually notched at their extremities to permit of a graduated shed) are connected at P to the swing baulk or beam lever Q, on the arms of which drawing knives R and R^1 are connected. Each arm of Q has its corresponding fulcrum S and S^1. The weighted levers T and T^1 act as already described to lower the drawing hooks R and R^1 over the knives E and E^1, which serve as pulling or lifting knives; whereas F and F^1 serve as pushing or depressing blades. It will be observed that both hooks R and R^1 are raised clear of the pulling knives, which in the figure are shown at the extremity of their stroke. Assuming that the hook R is dropped for the next outward movement of the knife E, the lower arm of Q will move outwards, and the lever N will thus be raised at U, and lowered at V. Since the

latter point of N is connected by wires and levers, or jacks, to the under side of the camb leaf, and the former point

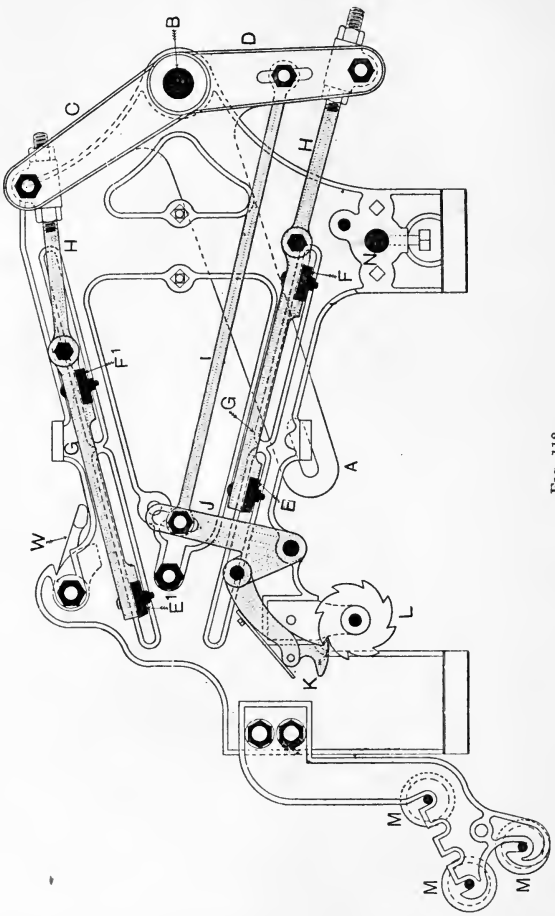

Fig. 113.

to the upper side, it follows that the leaf connected will rise. The blades E and F being connected together by a

rigid bar G (Fig. 113), always retain their relative positions, and, at the outward extremity of the assumed stroke, F will still be in close proximity to the lower end of the

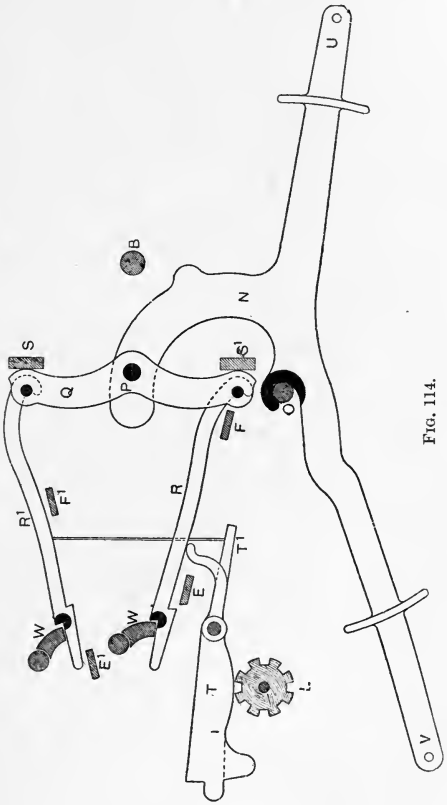

Fig. 114.

lever Q. If the leaf in question, now raised, requires to be lowered for the next succeeding pick, the blade F will press upon and positively return the lower arm of the lever Q to its former position—that shown in Fig. 114,—and

the leaf attached will be depressed. If, on the other hand, the leaf were required to be up instead of down for the following pick, the hook R^1 would have been allowed to drop over the knife E^1, and lever Q would simply swing about P as a centre (this point being practically stationary during the stroke), and the leaf would be retained in its raised position. In order to ensure that the blades F and F^1 will keep in close proximity to the extremities of the arms of Q when the latter are removed from their respective fulcra S and S^1, but more particularly to reduce friction to a minimum, they are arranged to move practically in the same radius as the lever Q. Weights W rest upon and therefore keep the hooks R and R^1 in contact with their respective lifting knives. For wide looms suitable connections are made to ensure a vertical and graduated lift.

The lag or pattern cylinders in the Keighley dobbies represented in Figs. 108 to 114 are shown as being driven negatively, but arrangements may be made in both cases for a positive drive if necessary. Figs. 115 and 116 show the arrangement for a positive drive to the lag cylinder of one type of loom supplied by Messrs. G. Hattersley and Sons, Limited. Keyed to the crankshaft A is a spur pinion B of twenty-two teeth, gearing with a spur wheel C of forty-four teeth, supported on a suitable stud D. Compounded with C is a bevel pinion E of twenty-eight teeth, gearing with the bevel pinion F of equal teeth, supported at the lower end of the vertical shaft G, about which it may revolve freely. It is, however, prevented from so doing when in action by a $\wedge$-shaped projection from its upper side taking into a corresponding groove in the under side of the part H. In the event of the lag chain becoming locked, the projection from F forces H clear of the

pinion, and permits the latter to revolve without imparting motion to the shaft G. A helical spring between the collar I and the part H serves to keep the latter in contact

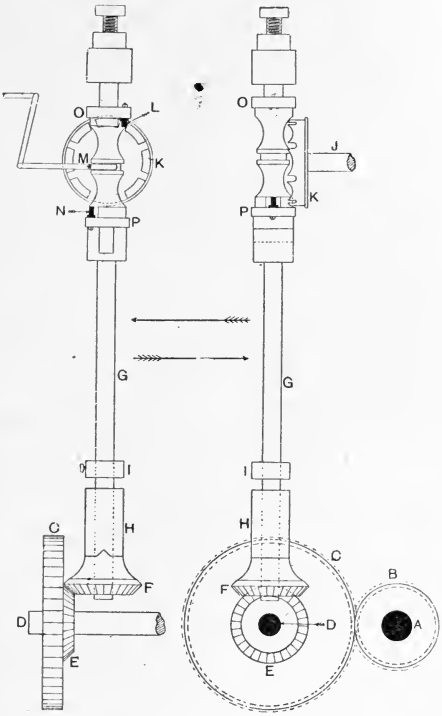

FIG. 115. FIG. 116.

with F, and yet allow, when necessary, the disconnection mentioned. On the end of the lag cylinder shaft J a crown star wheel K is set-screwed, which is turned one-eighth of a revolution by the pin L every revolution of the shaft G. In order to reverse the direction of motion

of the shaft J, the pin L (by means of suitable levers and the fork M) is lifted out of gear with K, and at the same time the pin N is lifted into gear—as shown in Fig. 116, —causing K, and therefore J, to move in the opposite direction. Due to the relative values of B and C, it is evident that the shaft G revolves only once for two picks, and that therefore one lag on the lag cylinder must also serve the same number. Occasionally lags are introduced which only serve for one pick, in which case each disc O and P contains two pins set diametrically opposite to each other. The shaft J will thus be moved every pick.

When this arrangement of positive driving obtains it is usual to drive the ⊣ lever of the dobby from a crank on the end of stud D, or from a pin or stud near the periphery of the wheel C, the former being the more modern method. The positive cylinder motion supplied by Messrs. Ward Brothers consists of a somewhat similar star wheel actuated by a pin and disc on a short horizontal shaft. This shaft is driven from the crankshaft by means of a pitch chain and pinions, the relative value of the latter being as two to one. Positive driving of the lag cylinder assists in keeping the box and pattern chains in unison with each other.

Those dobbies already described may be considered as shedding mechanisms which may be mounted on almost any loom for the single purpose of governing the shedding of the warp yarn. But in fancy work of any kind where different coloured wefts are used, and where the same are required to keep in unison with a prearranged order of shedding and picking, experience has determined that if at all possible these three actions should be so governed by some simple arrangement that it will be impossible for any one of the motions to get out of harmony with the others. The fact that it is a machine that will accomplish the object

desiderated is our reason for introducing Hollingworth and Knowles' dobby, which, although not employed in the linen trade, nor yet extensively in the fancy part of the jute trade, is well worthy the closest attention of manufacturers engaged in the latter branch of weaving. Besides controlling the shedding, picking, box, and up-take motions from one direct source, the mechanism is so arranged that all parts may be reversed by hand; and to facilitate mending broken ends a levelling bar is provided which in connection with the ordinary mechanism can bring all leaves to the same level at any desired moment. The loom is made in various widths, and to actuate from 16 leaves upwards, as required. All parts subjected to much wear are casehardened, or chilled in casting, and all parts are interchangeable for the same hand of loom. The driving of the loom also is such that a variation in speed may be obtained without change of pulleys or drum.

In Fig. 117 the essential parts of the mechanism of the dobby are shown. A and B are two fluted or toothed driving cylinders, which continually revolve in opposite directions, as indicated by the arrows. Each camb leaf is attached, from the top and bottom respectively, to C and D, the two arms of a bell-crank lever fulcrumed at E; each lever is provided with a separate short connecter F, vibrator lever wheel G, and vibrator lever H, the latter being fulcrumed at I. One end of the connecter F is hooked at J to the bell-crank lever, the other end being attached to the vibrator wheel G by a pin K, the wheel G being supported at its centre by a suitable pin in H. The arrangement of the three parts F, G, and H is shown in detail (plan and elevation) in Fig. 118, one-sixth the actual size. F and H are each composed of two flat wrought-iron bars, riveted together at suitable points; F is forked at one

end 2 to connect with the bell-crank lever CD at J (Fig. 117), and at the other end 3 to take in the lever wheel G, to which it is connected by a pin K; while H is also forked at 4 to take in the same lever wheel, supporting it at its centre by the pin 5. The lever wheel G is provided with

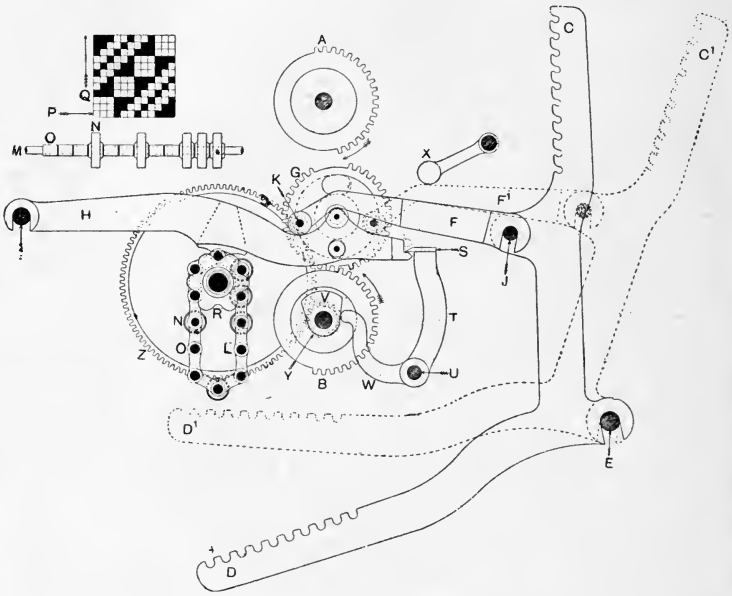

FIG. 117.

a concentric slot 6, extending fully halfway round, through which a pin 7, carrying an anti-friction roller, passes to prevent excessive travel in the wheel. The continuity of the teeth of the wheel is broken at 8 by the omission of one tooth to facilitate engaging with the toothed cylinders A and B; and at the point 9 (diametrically opposite 8) is again broken by the omission of four teeth to enable it to

remain at rest for any number of successive picks, as may be determined by the weave. In the position shown in Fig. 117 it will be observed that the rotation of the cylinder B will cause the lever wheel G to revolve clockwise, and thus place the connecter F and the bell-crank lever CD in the positions represented by F^1, C^1, and D^1 respectively. This movement will result in the lowering of a leaf, and will bring that part of the wheel G with the four teeth missing opposite the cylinder B, which will thus be prevented from rotating G any further, so long as G remains in this position. It will be seen that the motion imparts a harmonic movement to the leaves—very similar to that obtained with wypers. Lever H, which supports the wheel G and determines the cylinder with which it shall be in contact, rests upon the pattern chain L, which is composed of rods M, with bowls N and bushes O, according to the pattern, and of which one link is shown detached for the first pick P of the weave. The pattern chain L (which shows the arrangement of bowls

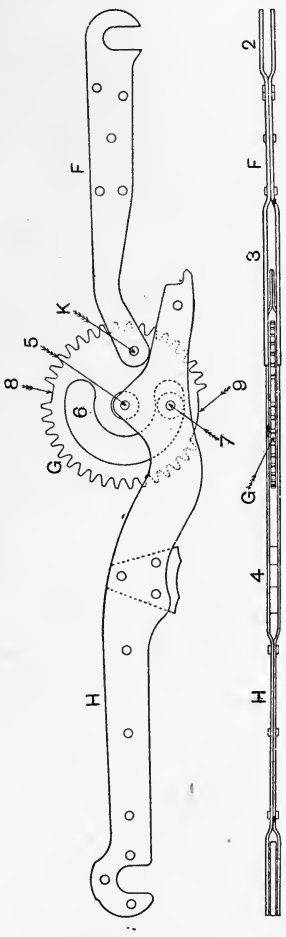

FIG. 118.

and bushes for the first thread of the weave in the direction of the arrow Q) is carried round continuously by the chain cylinder R, and according as a bush or a bowl be under the lever H, the lever wheel G will be in contact with the cylinder B or the cylinder A. As already shown, the movement of the cylinder B from the position represented in the figures will result in the large gap in the wheel G occupying the low position, and thus preventing further rotation until the bowl N in the pattern chain L lifts the lever H, thus placing G in contact with the top cylinder A, which will again raise the leaf. It will thus be seen that the mechanism is on the open-shed principle.

The lock-knife S (which serves to keep the gear wheels G in contact with the cylinder B during action) is supported by two arms T, set-screwed on the shaft U. Motion to the lock-knife is imparted by a cam V (fixed on the shaft of the cylinder B), through the finger W (also set-screwed on the shaft U). The finger W is kept in close contact with the cam V by the action of a flat spring; the cam V is timed to act upon the finger W so that the lock-knife S will be withdrawn immediately the pin K has reached its opposite dead centre, and of course before the pattern chain L attempts to lift the lever H and wheel G into contact with the top cylinder A; its timing also permits of S being in the position shown a little before the cylinder B can produce any movement in the wheel G. A steadying weight X rests on all the lifted connectors F. Originally the hexagonal chain cylinder R was driven as represented in the figure from the shaft of cylinder B by a pinion Y of 16 teeth and the wheel Z of 96 teeth, but it is now driven from cylinder A.

The levelling apparatus shown in Fig. 119 consists of a grate A, bolted to the framework in such a position that

the ends of all the vibrator levers H (Fig. 117) project through it and over the part B. The latter is a flat bar, provided with inclined slots C, through which pins D are passed and fixed in A. When in work, the pins D occupy a position at the top of the slots, but by drawing a handle E (which projects outside the front of the dobby) the part B is raised into the position shown, raising with it all the vibrators H and the wheels G which are in the low position into contact with the top cylinder A; half a revolution of the cylinder A will then place all leaves level in the top position. A newer form of levelling apparatus is illustrated in Fig. 120. The top figure represents the position of the

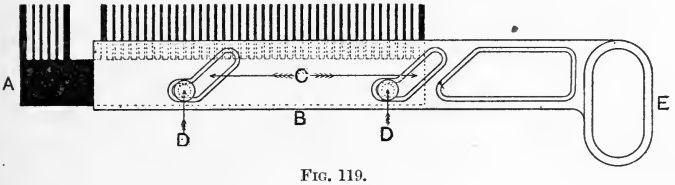

FIG. 119.

levelling bar A when the loom is working; the ends of the vibrator levers, shown in black, indicate that Nos. 1, 2, 3 and 7 are up, and Nos. 4, 5, 6 and 8 are down according to the pick line B at the top of the figure. In the lower figure the lever C has been moved partly round, with the result that all vibrator levers have been raised to the same level, much the same as indicated in Fig. 119. The end views in Fig. 120 also show the respective positions of the levers when in work, and when lifted for the purpose of bringing all leaves to the same level.

The method of driving this loom differs from that of the great majority of others in that the motion, instead of being taken to the crankshaft direct, is first imparted, as

shown in Fig. 121, to a short cross-driving shaft A placed at right angles to the line of the crank and wyper shafts B

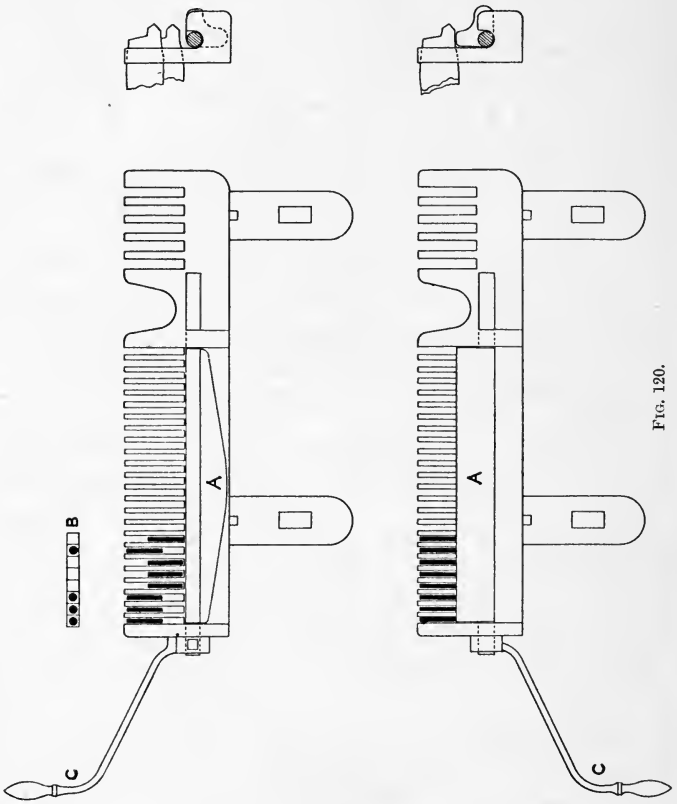

FIG. 120.

and C. The shaft A is supported at two points near the fast and loose pulleys D and bevel pinion E, in a suitable sliding bracket, which enables driving pinions of different values to be placed at E, thus securing a ready method of

altering the speed of the loom without change of pulleys or drums, and therefore without breaking the belt. Three pinions are supplied, which permit of a variation in speed of about 20 per cent. The bevel pinion E gears with the compound bevel and spur wheels F and G on the low shaft C, the crankshaft B being driven by gearing of spur wheels G and H of equal teeth. In wide looms G and H are slightly elliptical and eccentrically set in order to increase

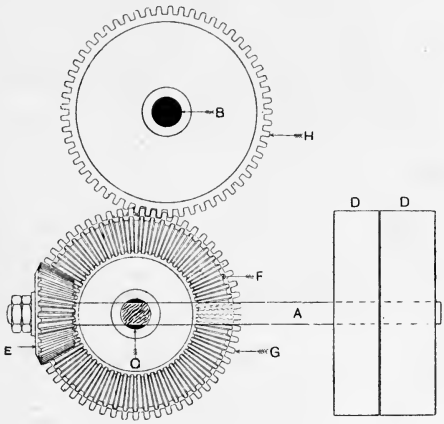

FIG. 121.

the dwell of the lay when the crank is rounding the back centre. Because of this latter gearing, the shaft C, on which the picking tappet is placed, will revolve at the same speed as the crankshaft. A decided advantage is thus gained in picking, as the action is imparted from a shaft which has twice the speed it would have under the usual conditions which obtain when picking from the low shaft. Due to the respective values of the bevels E and F (approximately as 1 is to 5), the shaft A will run at

about five times the speed of the crankshaft. This high speed of the driving shaft ensures a much steadier movement in the loom than if driven direct from the crankshaft B.

The driving of the mechanism of the dobby is shown in

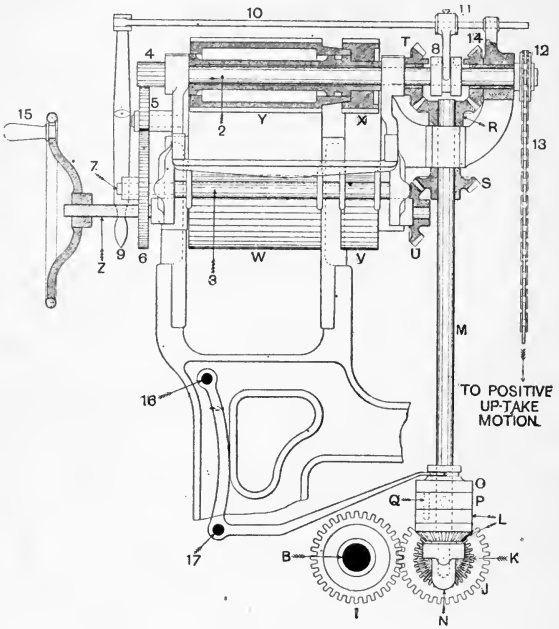

FIG. 122.

Figs. 122 and 123. On the end of the crankshaft B (opposite to that of the driving) a spur wheel I gears with a stud wheel J of an equal number of teeth. Compounded with the latter is the bevel pinion K, gearing with the clutch bevel pinion L of equal teeth, which revolves loosely round the vertical shaft M supported in the footstep N.

Part of this clutch arrangement O is also loose on the shaft M, while the part P is set-screwed on the same shaft; the clutch is completed when in action by a pin Q fixed in O, passing through a hole in P and entering partly into L. Keyed on the shaft M are two bevel pinions R and S which gear with and drive equal bevel pinions T and U;

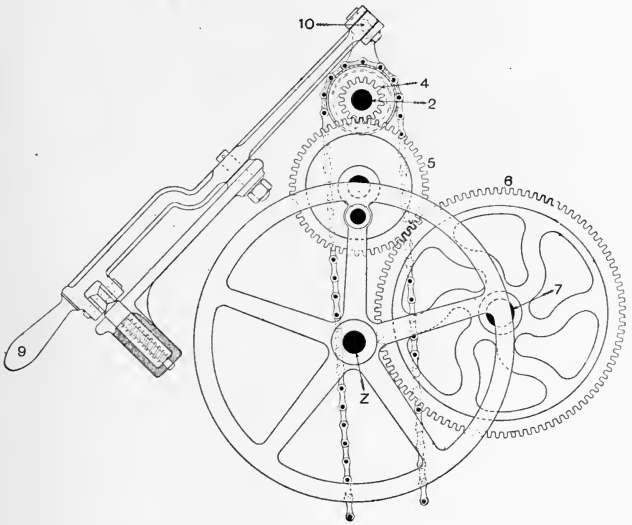

FIG. 123.

the latter pinion, as well as the low cylinders V and W, is keyed on the shaft Z. The pinion T, however, and the cylinder X are keyed on a sleeve which may revolve freely round the shaft 2. To this sleeve cylinder Y is set-screwed. The cylinders W and Y are those represented by B and A in Fig. 117, and therefore control the shedding; cylinders V and X similarly control the levers for the box and picking motions. Since the pinion R drives the pinion

T from below, and the pinion S drives the pinion U from above, it follows that the cylinders Y X and W V will revolve in opposite directions.

As already stated, the chain cylinder 3 was originally driven from the shaft Z, but the motion is now imparted from the shaft 2 through pinions 4 of 16 teeth keyed on the end of this shaft, carrier wheel 5, and wheel 6 of 96 teeth on the end of shaft 7 of chain cylinder. This arrangement will be better seen in the front elevation in Fig. 123. When the loom is working forward, the clutch 8, Fig. 122, which is fixed to the shaft 2 by a sliding key, is brought into contact with the pinion T by means of a handle 9, rod 10, and fork 11, when the shaft 2 and the cylinder Y rotate in the same direction. On the end of the shaft 2 a chain pinion 12 is keyed, which through the pitch chain 13 conveys movement to the positive uptake mechanism. When it is desired to reverse the loom in the case of a broken shot or other defect, the dobby mechanism is liberated from the driving of the loom by the action of lever 16, fulcrumed at 17, withdrawing parts O and Q from the part L of the clutch arrangement at the bottom of the shaft M; then by placing the clutch 8 into gear with the bevel pinion 14 (which also revolves freely on shaft 2, but in the opposite direction to pinion T), and by rotating the hand wheel 15 in the normal direction, the chain cylinder 3 and the uptake chain 13 will be rotated in the backward direction, while the cylinders V, W, X, and Y will revolve in the normal or forward directions, and will actuate the shedding, box, and picking levers just as if the loom were going. The arrangement of the uptake motion is such that when "picking back" the cloth beam gives off the cloth in exact proportion as the shedding is reversed.

Fig. 124 is an isometrical view of the top shaft, cylinders, etc., removed from the framework. C is the shaft; B the driving pinion for the chain cylinder; A the toothed cylinder for operating the camb leaves; E the toothed cylinder for operating the box and picking levers; F the bevel pinion for the forward driving of the shaft C; D the sleeve on which the parts A, E, and F are fixed; G the bevel pinion for reverse driving of the shaft C; J the clutch; K the projections on the pinions F and G for engaging with the clutch J as desired; and H the chain pinion for the uptake motion. Parts B, J, and H always rotate with and in the same direction as shaft C. Parts A and E are fixed on the sleeve D independently of each other, with the view of placing the shedding cylinder A in advance of the picking and box cylinder E. This may be done to the extent of seven teeth, or approximately one-fifth of a revolution of the crankshaft. In the figure, A is four teeth in advance, a position which is found to be suitable for most classes of work. The box, picking, and other motions of this loom will be considered under these respective heads.

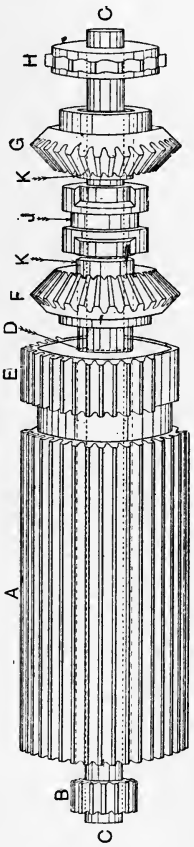

Fig. 124.

For cross-border, and other similar work, special dobbies are provided, or special parts are added to existing machines, by which two sets of cards or lags, each set cut or pegged to produce a different effect, may be brought alternately

into play on the indicating or needle part of the dobby. These machines are usually arranged to be either semi-automatic or fully automatic; that is, they are arranged so that the change from one set of lags to the other may be made by hand at any desired moment, or so that the change will be made by the machine automatically after a predetermined number of repeats of either chain of lags has been woven. The latter is the more desirable machine as it can generally be worked in either way at will.

Simple changes, such as closing the sides or the ends of a seamless bag, may be and frequently are produced by tappets only; but where the repeat of the weave exceeds about four picks, a cross-border dobby is desirable if not absolutely necessary. In some cases a two-cylinder dobby is arranged to give three different weaves on two sets of lags. For example, an ordinary huck towel is desired with a cross-border made up of $\frac{1}{1}$ plain cloth and another fancy weave other than huck. Alternate lags, say odd numbers, of the border set are pegged for the plain weave while the even numbered lags are pegged for the fancy weave. The ratchet wheel on the border cylinder is provided with 12 teeth, and the cylinder with 12 divisions for the lags, but when in action the ratchet wheel is moved two teeth at a time, so that only odd numbered lags, *i.e.* those pegged for the plain weave, act upon the needles. When even numbered lags are required, a simple movement raises the pawl which has been in action, and releases a second pawl arranged to act upon the intermediate teeth of the ratchet, and so present the even numbered lags to the needles. Take a case where a four-inch border is wanted on a cloth containing 60 picks per inch. It might require $\frac{4 \times 60}{2} = 120$ lags to peg this fully; but if the

fancy weave repeated on 40 picks, then 20 lags would be required for it, and other 20 for the alternate lags for the plain weave, or only 40 lags in all.

Generally speaking, however, the machines are of the usual two-change type, and in Fig. 125 we illustrate one of this kind as made by Messrs. Ward Brothers, Blackburn. The dobby is fully automatic, and the change from one set of lags to the other is perfect. The repeat and border cards are carried respectively by cylinders A and B; these are rotated in the same direction — clockwise — by two ordinary pushing pawls which act upon corresponding ratchet wheels at the other end of the cylinders, that is, at the weaver's side of the machine. Cylinders A and B are supported by a two-armed rocking lever C, but on opposite sides of the fulcrum shaft D, so that when either cylinder is raised into working contact with the needles of the dobby, the other cylinder is naturally lowered and so removed from working contact. At the same time, parts on the other side of the machine, which it is not necessary to show, drop one pawl into gear and raise the other one out of gear with their respective ratchet wheels, so that one cylinder begins to rotate while the other one ceases. The rocking lever C is extended and forked at its inner end to carry on suitable studs the antifriction rollers E and F, between which a six-sided tappet G is made to revolve. From the formation of the tappet ($\frac{1}{1}\frac{1}{1}\frac{1}{1}$), and the position of the rollers E and F, it is evident that rotation of the tappet G will bring the cylinders A and B into action alternately; but the further arrangements are such that either set of lags may make any desired number of complete revolutions, or repeats of the pattern, before the other set is brought into play. This number is, of course, determined by the length of the cloth to be woven, the

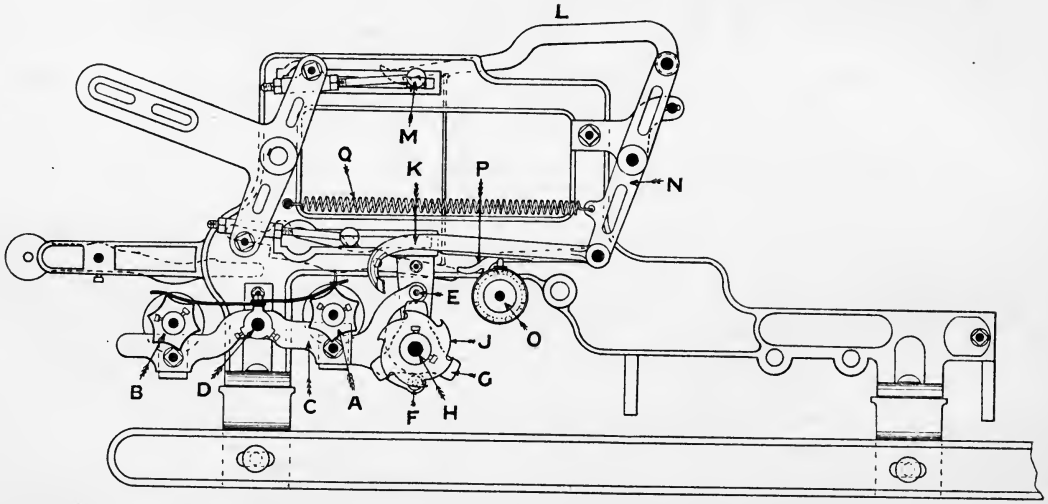

Fig. 125.

picks per inch, and the repeat of the weave. Set-screwed on stud H, and thus compounded with tappet G, is a six-toothed ratchet wheel J, which may or may not be moved one tooth by pawl K at the end of each complete revolution of the lags on either cylinder A or cylinder B. The last lag of each set is so pegged that on the last pick of the pattern the draw hook L is caused to drop, engage with, and be withdrawn by the top draw knife M as the latter recedes. Through lever N this motion is imparted, but in the reverse direction, to pawl K, which, in the position shown in the drawing, would clearly pass over ratchet J. If, however, the peg shown on cylinder O were withdrawn, or a lag without a peg were in position, the pawl K would drop, engage with, and rotate ratchet J, and therefore tappet G, and thus change the positions of cylinders A and B. Cylinder O is advanced one tooth or one lag in a counter-clockwise direction by means of pawl P and spring Q with every forward movement of pawl K, and therefore for every repeat of the lags on either of the cylinders A and B. Consequently, the order of pegging for the pilot set of lags on cylinder O determines the order in which the change of cylinders A and B will be effected. Thus, all blanks would mean that each cylinder would act for one complete repeat of the lags alternately, while all pegs would mean that one cylinder would act continuously. One blank followed by nine pegs, one blank, three pegs, would give ten repeats of one set of lags, followed by four repeats of the other set, and these repeats could be either ten of those on cylinder A followed by four of those on cylinder B, or ten repeats of B, followed by four of A according as they were arranged to begin. It will be evident that any arrangement of this kind deducts from the dobby one shaft from the total of those available for ordinary shedding purposes.

Fig. 126 illustrates another type of automatic dobby, made by Messrs. Lupton and Place, Ltd., Burnley. A special jack at the back of the dobby is provided, and which may be brought into action by the lower pulling knife only. As the latter moves to the right it draws forward the lower end of lever A, and thus, through the action of pushing bar B, rotates pilot cylinder C one-sixth of a revolution. This action takes place every revolution of each of the patterns, and is brought about by pegging the lags as mentioned in connection with the dobby shown in Fig. 125. The two sets of lags for operating the levers, and therefore the leaves of the camb, according to the two different patterns, are placed over cylinders D and E respectively. These are mounted on opposite ends of lever F, and are capable of being placed into and out of position by oscillating the lever F on its centre G. A pushing pawl operates cylinder D, and a pulling pawl operates cylinder E, the direction of motion being indicated by the two arrows; both pawls are at the front of the loom, and when either is in action the other is kept clear of its corresponding ratchet wheel. Cylinder E is at present in gear, and the lever F is kept steady by means of spring H, which is exerting its pressure on the under side of the > shaped end J. The change from one cylinder to the other always takes place when the lower arm of ⊢ lever K is moving to the left; this is necessary in order that the two patterns may join perfectly — if arranged otherwise, a pick is lost and the pattern broken. The illustration shows that during the last movement of ⊢ lever K to the left, the < shaped piece L has acted on the upper sloping surface of short arm M, and forced down rod N, one end of which is guided vertically by a slot in bracket O, while the other end encircles shaft P of lag cylinder D. A down-

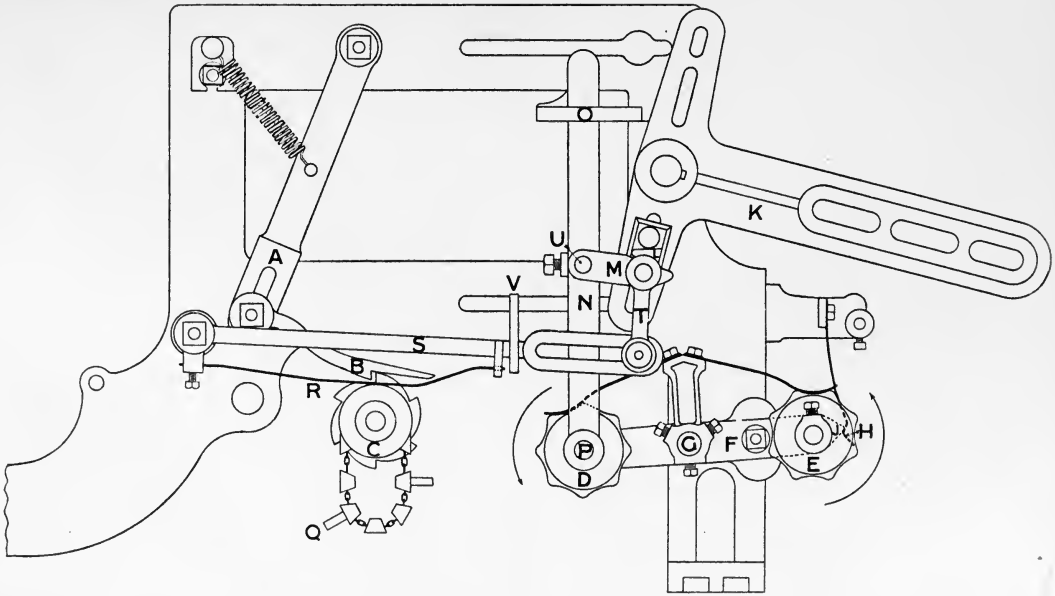

Fig. 126.

ward movement of rod N necessarily places lag cylinder D out of action, and correspondingly raises cylinder E into action. The lags on pilot cylinder C show that, after four revolutions of the lags on cylinder E, the peg Q will be placed under spring R simultaneously with the movement to the right of the lower arm of ⊢ lever K. Peg Q will thus raise spring R, and the latter will in turn raise lever S, connecting link T, and short arm M, which turns freely on stud U. This action will raise the end of arm M so that the < shaped piece L, in its next movement to the left, will act upon the under inclined surface of M, and thus raise rod N and cylinder D, at the same time lowering cylinder E out of action. When this takes place the bent part of spring H presses on the upper surface of J, and keeps lever F and both cylinders steady.

CHAPTER XII

JACQUARDS: SHEDDING, MOUNTING, ETC.

For patterns of a geometrical nature which are beyond the easy compass of a dobby, and for all patterns of a floral or elaborate character, it is advisable, if not necessary, to use a jacquard machine. Many types of this machine are in every-day use, from the ordinary single-lift jacquard to the specially-constructed, and in most cases complex machines introduced for the production of certain special fabrics. The introduction of the latter class of machines has been resorted to for various economical reasons, but it is generally admitted that any gain in this direction has been obtained at the expense of the delicacy of the outline

and the detail of the pattern, and in some cases, of the perfect structure of the cloth. The size or denomination of a jacquard machine, and its capacity for producing large and varied figures, are determined by the number of hooks or threads which it is capable of lifting independently of each other. For example, a 600^{s} jacquard, sometimes termed a 60-design machine, is one containing at least 600 hooks, any one of which or any section of which can be lifted at will. Jacquards are made in many sizes from 100 hooks upwards, and the following list indicates the capacities of machines which are in daily use :—

Nominal Capacity.	Number of Rows.	Number of Hooks per Row.	Total Number of Hooks.
100	26	4	104
200	26	8	208
300	38	8	304
400	51	8	408
500	51	10	510
600	51	12	612
600	76	8	608
880	48	16	880
	8	14	
900	56	16	896
900	76	12	912
900	57	16	912
1200	76	16	1216
1320	72	16	1320
	12	14	
1344	84	16	1344

Any odd capacity may be obtained by compounding any two or more of the above sizes. Occasionally three machines, all different in capacity, may be mounted on one loom, although it is usual, when compounding, to have all the machines of the same size; thus, two 400^{s} to give a capacity of 800, and so on. Most machines, although not all, are provided with a few extra or spare hooks

beyond their normal capacity for the control of selvages, or for other work outside the pattern proper.

Ordinary jacquard machines may be divided into three well-defined kinds—single-lift single or double cylinder, double-lift single-cylinder, and double-lift double-cylinder. Figs. 127 and 128 are sectional views of the first-mentioned kind (single-lift), the action of which is the basis of action of all jacquards. The principal parts are hooks A, cross wires or needles B, cylinder C, springs D, and lifting knives E, these latter being fixed in an iron frame F. The knives and frame together form what is commonly termed the "griffe," or "brander." The griffe is raised and lowered (by means of suitable connections) every revolution of the crankshaft, and therefore once every pick.

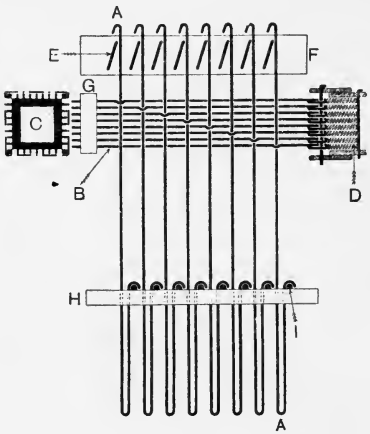

FIG. 127.

The normal position of the hooks A is directly over the knives E, as shown in Fig. 127; the hooks are retained in this position by the action of the springs D on the rear end of the needles B, and a suitable bend in the latter passing partially or wholly round the hook. Any hook allowed to remain in this vertical position will be taken up by its respective knife when the griffe is raised. The cylinder C is a square wooden prism made from a solid piece of wood, or else built of four separate pieces; in both cases each side is perforated to correspond with the

number and the pitch of the needles in the machine. It moves to and from needles B approximately in unison with the falling and rising of the griffe, makes a quarter of a revolution each time, and thus presents its four sides to the needles in regular succession. The looped ends of the needles B are supported by horizontal wires passing between them, while their straight ends are supported in the needle board G, and, provided no obstruction is placed in the way, they will all enter the perforations in the cylinder C when the latter advances to the needle board, and all hooks will be lifted. To form a shed it is necessary that part of the warp, and consequently some of the hooks, must remain down, and to attain this end stiff paper cards, perforated or cut according to the pattern to be woven, are used. These are laced in an endless chain, are passed round the cylinder, and revolve with it. The size of each card and the pitch of its perforations correspond with every side of the cylinder, and therefore with the needles. As cylinder C advances, the needles B enter all perforations in the card presented ; but where the card is uncut the needles are pushed back and their corresponding hooks placed out of the reach of the lifting knives. This action should take place when the griffe is in its lowest

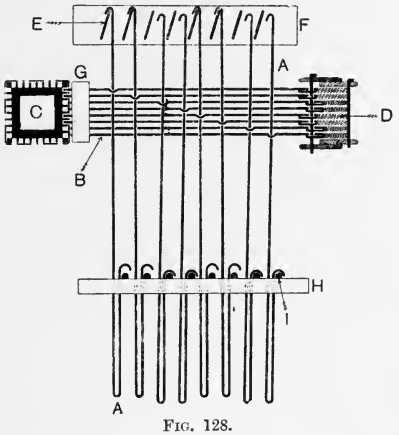

FIG. 128.

position, but as a matter of fact it takes place some time before this in looms where the cylinder receives its motion from a swan-neck, or is directly controlled by the movement of the griffe. In Fig. 127 the griffe has reached its lowest point, but the cylinder C is shown advancing towards the needles B. In actual work, however, the cylinder would be close in at this time. The present position is taken to show the action of the cylinder on the ends of the needles. In the card facing the needle board it will be seen that needles 1, 2, 5, 6, counting from the top, will enter the cylinder, but needles 3, 4, 7, 8 will be pushed back, as the card is uncut at these points.

Fig. 128 shows the result of this action. Here the cylinder is close to the needle board, and the griffe has begun to rise, taking with it hooks 1, 2, 5, 6, and leaving down hooks 3, 4, 7, 8 as selected. Immediately the cylinder recedes, the compressed springs D compel their corresponding hooks to resume the normal vertical position, but the cylinder must not leave the needle board until the knives have come into contact with the hooks which are to be lifted. Further examination of the hooks A will show that their lower ends are bent upwards from 5 to 6 ins., and hooked partly round an iron rod attached to, or bead cast upon, the grate H. Rods or beads I support all hooks in their lowest position, and prevent them resting on the knives E when the griffe is down and the new selection is being made. It is obvious that unless hooks were supported clear of the knives the action of the needle would only tend to bend the hook at its point of connection with the needle. The slots in the grate H, through which the hooks pass, keep the hooks facing the knives, and cause them to rise and fall perpendicularly. Harness cords to which the heddles or mails are

attached, are connected to the lower end or bend of the hooks.

Fig. 129 shows various types of hooks and needles

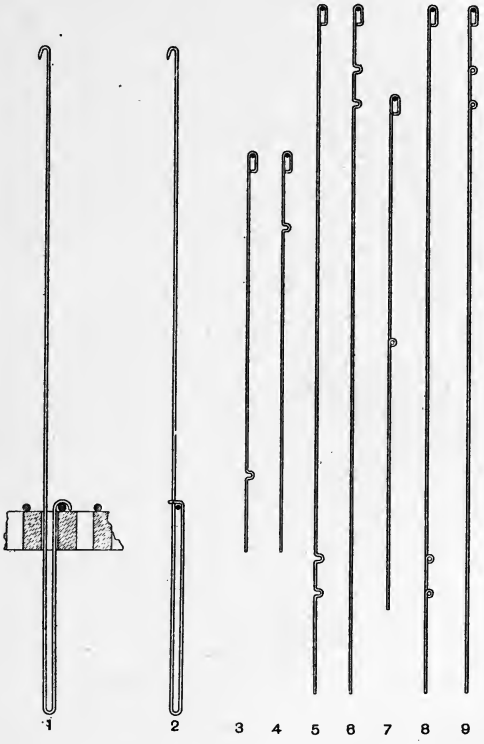

FIG. 129.

utilised in jacquard machines. They are represented exactly one-fifth their full size. Nos. 1 and 2 are the two kinds of hooks in general use for single-lift machines. Nos. 3 and 4 are the top and bottom needles of a 400 single-lift machine, and may be used with either type of hook,

although generally used in conjunction with No. 1. The needle for No. 2 hook usually passes completely round it, as shown in No. 7, which is a needle for a 600 machine. Nos. 5, 6, 8, and 9 show the top and bottom needles of each kind for a 400 double-lift single-cylinder machine.

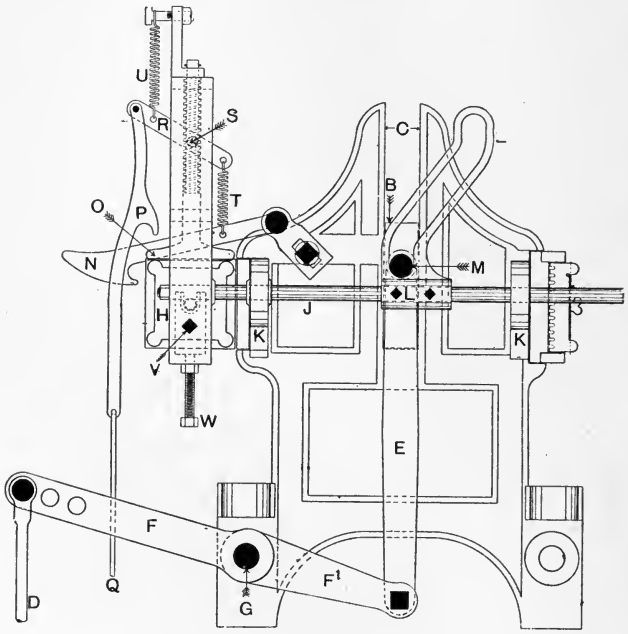

FIG. 130.

Figs. 130 and 131 show in elevation and plan the framework of a single-lift jacquard machine of a Scotch type. Projecting from each side of the frame of the griffe A is a lifting block B, part of which is planed to move freely in the vertical slide or guideway C of the framework. Motion is imparted to the block B by means of a crank or

an eccentric on the crankshaft of the loom, through the

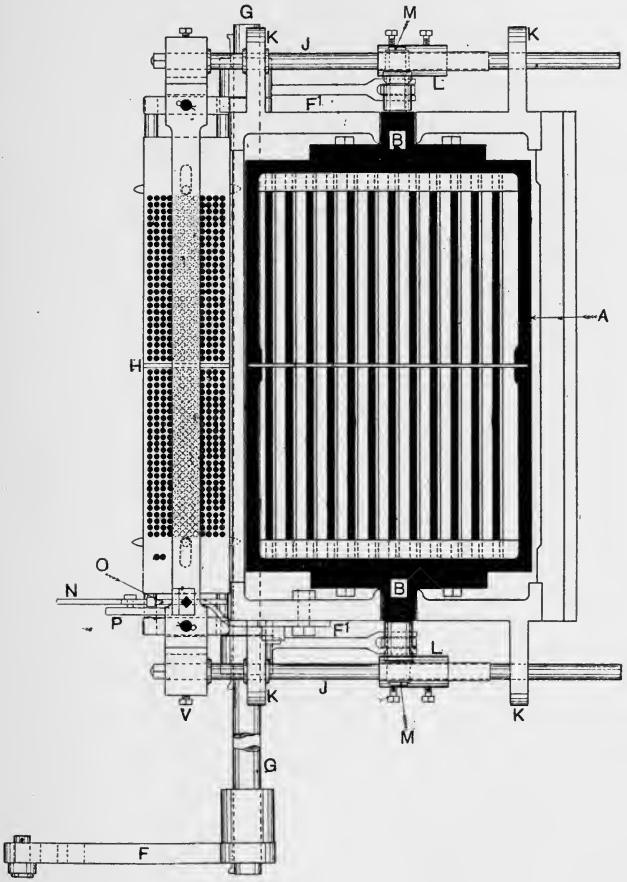

FIG. 131.

connecting rods D and E, and the lever F F^1 keyed on the shaft G, which is supported in, and extends across, the

framework, carrying at its farther end corresponding parts to F^1 and E. A horizontal movement is imparted to the cylinder H by means of "swan-necks" L set-screwed on the rods J. These latter are carried by, and slide freely in, the brackets K. The studs M project from the lifting block B on each side of the machine into the swan-necks L, and at that point carry anti-friction rollers. As the block B rises, the studs M force forward the swan-necks L and the rods J, the latter carrying with them the cylinder H. Fixed at each end of the cylinder is an iron head or lantern, rounded at the corners, and slightly cut away between them as shown. When the cylinder H is clear of the needles in its outward movement, one corner of the lantern takes into, or is arrested by, the catch N, and is rotated thereby as the cylinder still further recedes. The spring hammer O serves to keep the cylinder perfectly level by pressure on the two corners of the lantern when the latter is not being acted upon by the catch N. Immediately the cylinder begins to rotate, O is gradually raised by the corner of the lantern until the latter in its turning begins to fall, when the pressure of O aids the turning movement, ultimately levels the cylinder, and checks all vibration of the cylinder before it again reaches the needles. In catch P provision is made for turning the cylinder in the opposite direction when necessary. This must, however, be done when the cylinder is out and clear of the needles; then, by pulling the cord Q, the catch P takes hold of the corner of the lantern, while at the same time, by means of the lever R, fulcrumed at S, and connecting spring T, the catch N is lifted clear of the lantern, allowing the cylinder H to turn. The spring U keeps the catch P in its normal position clear of the lantern. As it is absolutely necessary that the ends of the needles should be

directly opposite the holes in the cylinder H, the latter may be adjusted vertically by the screws V and W, and laterally by shifting the position of the cylinder frame or batten on the slide rods J. It will be observed that the jacquard described is a 60-design or 600^8 machine.

An end elevation of a slightly different type from that just described is shown in Fig. 132. In this view the griffe A is partially raised (the ends of the lifting knives being shown at E) while the cylinder H is turning by the action of the catch N. The griffe A is supported at either end by two spindles C; these pass through and slide freely in the guide bushes D, supported on brackets inside the framework, and thus ensure a vertical motion to the griffe. The spindles C, near their upper ends, pass through and are rigidly fixed in the lifting blocks B, which are attached to the griffe A. Bolted on the upper ends of C, and passing across the griffe, is a crossbar Z. This is attached at the centre by a pendant connecting rod to an overhead lever, which is actuated in the usual manner by means of a crank or an eccentric on the crankshaft of the loom.

A horizontal movement is imparted to the cylinder H in a manner exactly similar to that already described, the cylinder in this case, however, being supported by slides J instead of spindles, adjustment being provided for by means of the screws W on the brackets K. The spring hammer O, while serving the same purpose as that already mentioned, is of an entirely different kind. To reverse the motion of the cylinder H it is only necessary to pull the cord Q when the catch P is brought into gear with the cylinder, the catch N being at the same time lifted clear by means of the wire X. This reversing motion, when used alone, is, however, suitable for hand looms only when the cylinder is actuated by a swan-neck. Y is a spring arranged

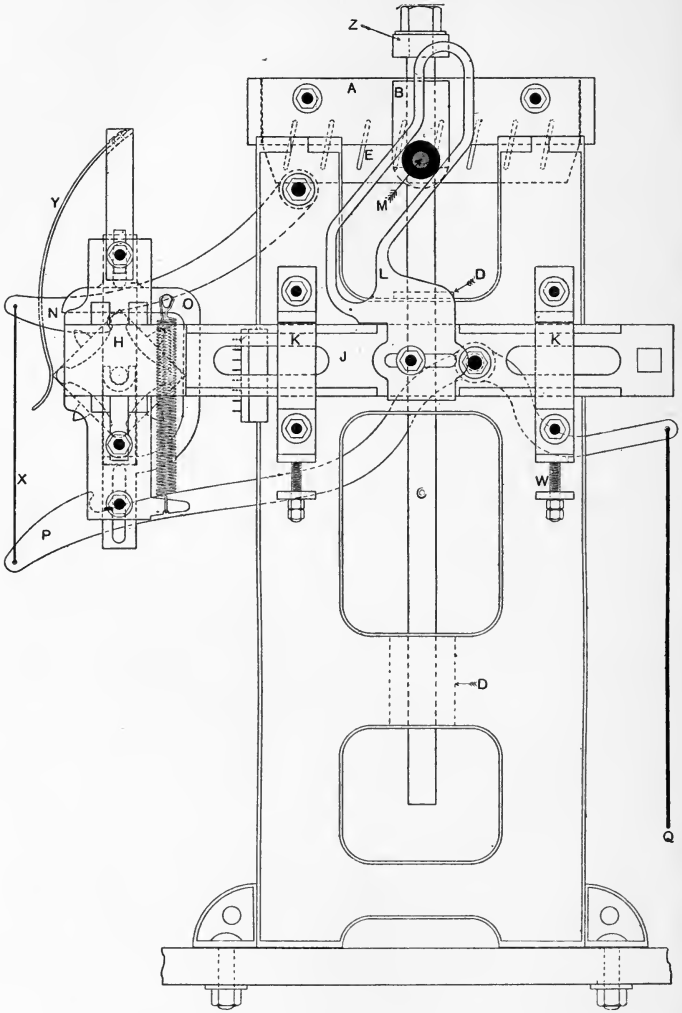

FIG. 132.

to keep the cards on the cylinder where sufficient tension is not obtained by the weight or drag of the cards themselves.

Most single-lift jacquards have the card cylinder driven by a swan-neck, or some other means which is dependent upon the rising and falling of the griffe. All those machines which are of the usual type have, however, the common defect that the cylinder must be full in, and pressing back the needles and hooks before the griffe has reached the lowest point in its movement, and before the griffe blades have cleared the hooks. This defect undoubtedly puts an undesirable stress upon, and reduces the life of, the needles, hooks, and cards, besides serrating the upper edges of the griffe blades. For these reasons it is often desirable, and ultimately more economical, to fit up an independent drive for the cylinder, at a greater initial cost, in order that the movement of the cylinder may be timed properly with regard to the motion of the griffe.

It is possible, however, to obtain the chief advantages of an independent drive to the cylinder, coupled with the low initial cost and the simplicity of a griffe controlled cylinder motion, and Fig. 133 shows a part sectional elevation of a machine, perhaps the only kind of this particular type. The machine is of continental make, and is extensively used. The griffe may be raised and lowered, and the cylinder supported and reciprocated in any well-known manner, although special methods are adopted in the machine under notice; these methods, however, do not affect the principle involved. Each hook or upright A is controlled by a corresponding needle B, the bend of which passes only behind the hooked part of the upright A, and which can therefore control the latter in only one direction, *i.e.*, forwards or towards the needle board C. All the needles are supported by the needle board C at the front,

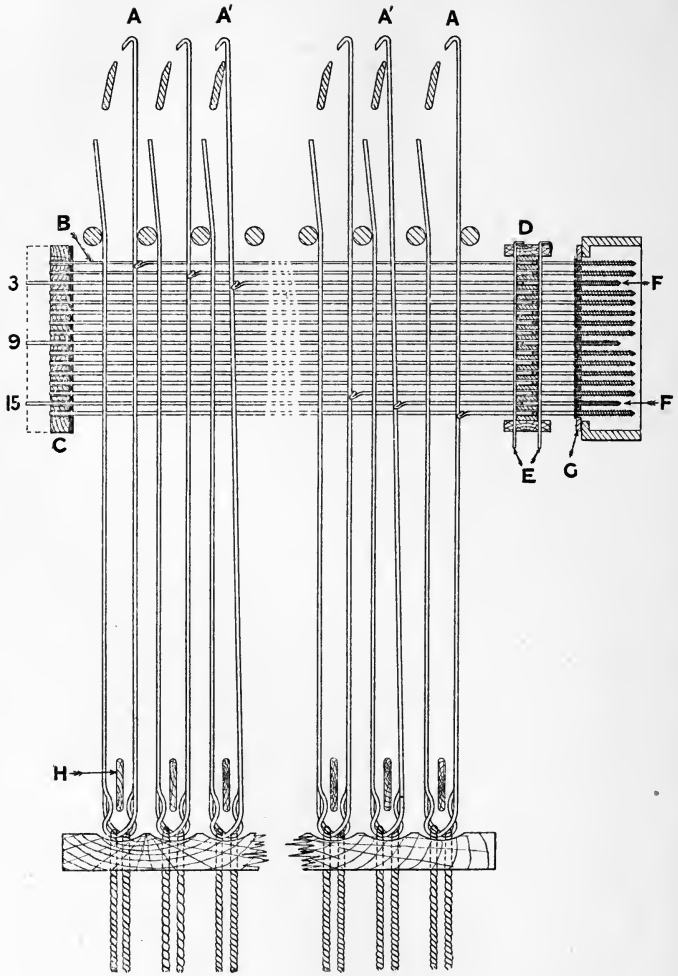

FIG. 133.

and by the heck or grate D at the back, and have their travel limited in both directions by the pins E in the heck, and a suitable bend formed on the needle at this point. Each needle extends about $1\frac{5}{8}$ inches beyond this bend, and has a very fine spiral spring F threaded upon it—the head of the spring being enlarged so that it is retained by the plate G, while the other end is tapered and closed to prevent the end of the needle from passing through. Each hook is a spring in itself, and always tends to open to the position shown at A, A, where the two hooks are clear of the corresponding griffe blades; but the spiral spring F is of sufficient strength normally to neutralise the spring of the hook, and to place the latter, by means of the needle, over the griffe blade—see hooks A′, A′, and needles 3, 9, and 15. The needle board C of this machine is so arranged that it is free to move forward by spring action as the cylinder recedes until it is practically flush with the needle tips; it thus protects the tips from the action of the cylinder, and also prevents them from tearing the cards. As the cylinder advances it pushes back the needle board, and also those needles which correspond with the uncut portions of the card, but no hooks are pushed back positively; those hooks which are falling with the griffe, and which require to go back for the next pick, only do so when the griffe, near its lowest position, releases them. The laths H are fixed in a light framework which rises and falls with the griffe; they assist in preventing the hooks from turning, and also steady them when in action. This machine is made with the comparatively fine pitch of 4 mm., or rather more than 6 needles per inch, and in multiples of 440 needles; 880 and 1320 are the usual capacities of the machine. Purely structural defects—the result chiefly of the demand for a cheap jacquard—and the

difficulty of cutting cards of the exact pitch upon an ordinary "piano" cutting machine, militate against the very wide adoption of the machine.

Double-lift Single-cylinder Jacquard. — In all single-lift machines the movement of the warp must necessarily be of that type described as bottom shedding, in which the warp in motion travels twice the depth of the shed for each pick. This fact, coupled with the consideration that the machine is mechanically unbalanced, practically prohibits high speeds in all looms so mounted, and has led to the introduction of the double-lift jacquard. This machine gives a shed of the semi-open type, in the formation of which some of the moving threads travel through only half the distance covered by those actuated in a single-lift machine. The shed may thus be formed in theoretically half the time, and the strain and friction on the yarn greatly reduced from this point of view. Fig. 134 is a sectional elevation of a double-lift jacquard. All double-lifts differ from single-lifts, in the fact that they contain double the number of hooks for the same capacity of machine. Thus a 408 machine has 816 hooks. Each needle B governs two hooks A and A^1, which may be actuated alternately and respectively by the griffes F and F^1. To each pair of hooks is attached one tail cord J by means of neck cords K and L. It will thus be seen that each pair of hooks governed by one needle actuates the same thread or threads in the warp. The griffe F is now in its highest position, supporting all threads through the medium of hooks A and cords K; while the griffe F^1 is in its lowest position with all hooks A^1 resting on the grate H, and all cords L slack. As both griffes are driven by a double-throw crank, it follows that as F descends, F^1 will rise in a corresponding degree. As F descends, the hooks A and

cords K will fall, while a corresponding upward movement will be given to the hooks A^1 and the cords L until F and

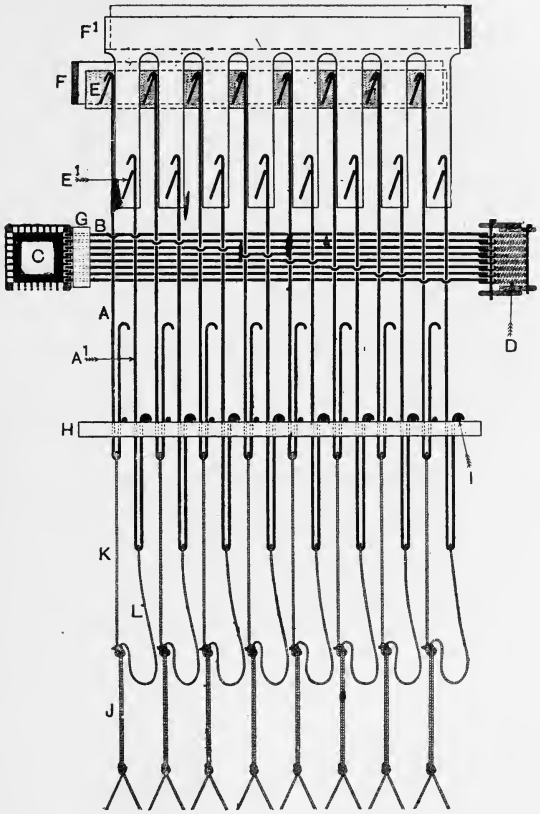

Fig. 134.

F^1 are level, when the cords K and L will both be in equal tension, and all threads in motion will be at the centre of the shed. From this point the cords K will slacken until

F reaches the lowest position, while the cords L, through the hooks A^1 and griffe F^1, will carry the threads to the top. The amount of lifting to be done by each cord will vary according to the weave employed. Thus, in a perfectly plain cloth, all the work would be thrown on one or other of the cords and hooks, but where a thread requires to be up for two or more successive picks, the weight will be borne alternately by cords K and L.

Fig. 135 gives a general view of one method of driving a double-lift single-cylinder machine. The griffes F and F^1 are shown in sectional elevation, and also in plan. In the elevation the framework only is shown with the lifting knives removed, but in the plan the knives are in position. The construction of the griffe F is in all respects similar to that of a griffe of a single-lift machine, consisting of a cast-iron frame to which is bolted two wrought-iron or cast-iron plates, slotted as shown to receive the lifting knives, or else provided with short pendant arms to which the knives are bolted. A similar cast-iron frame is used in the griffe F^1, but the wrought-iron or cast-iron plates have pendant arms about $6\frac{1}{2}$ ins. long, slotted near their lower ends to receive the ends of the knives. The griffe F^1 occupies the inside position, and the pendant arms move up and down between the knives of griffe F, these latter moving vertically in the spaces between the arms. Connections between the griffes F and F^1 and the spindles C and C^1 to the pendant connecting rods G and G^1 are similar to those already described for the single-lift machine, Fig. 132. The levers H and H^1 and the connecting rods J and J^1 are shown completing the connection to the double throw crank fixed on the bottom or wyper shaft L. As will be seen, the throws of the crank are diametrically opposite to each other at K and K^1; they will therefore

impart an equal and opposite movement to the griffes F and F^1. The levers H and H^1 are fulcrumed in a bracket

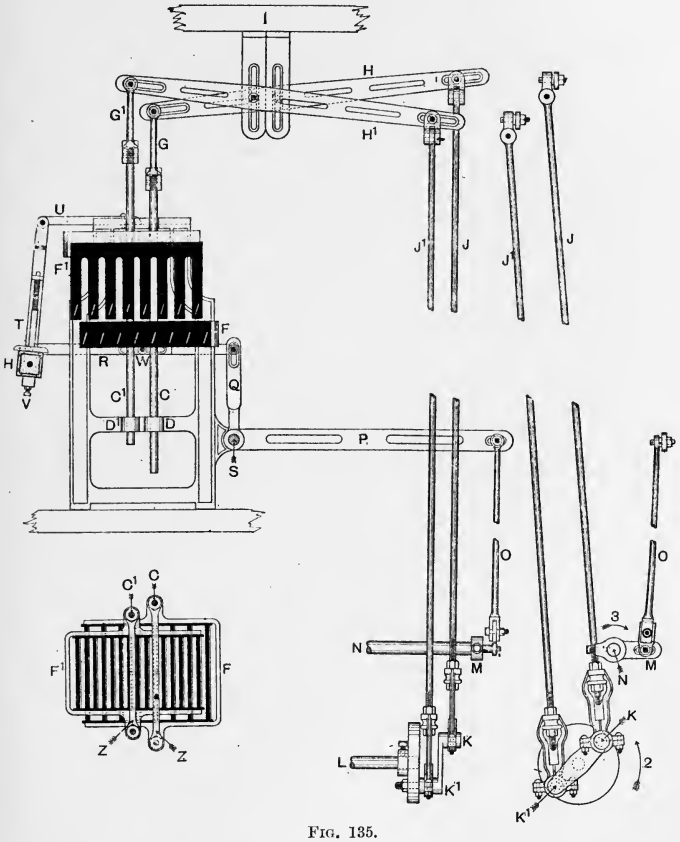

FIG. 135.

bolted to the beam I about the roof of the weaving shed, or supported by a standard from the beams supporting the jacquard, to ensure freedom from vibration; and for the

same reason it is advisable to support the jacquard machine independently of the loom framework. This may be done by means of wooden beams or light iron or steel girders which are carried on brackets cast upon or bolted to the columns supporting the roof of the weaving shed.

The chief advantages obtained through the use of the double-lift machine over that of the single-lift lies in the fact that for the same number of picks per minute the griffes travel at only half the speed. In the double-lift a shed is formed by the rising of one griffe and the falling of the other, while in the single-lift a shed is formed by the falling and rising of the same griffe. It is, however, not to be deduced from these statements that a double-lift machine may be driven at twice the speed of a similar single-lift machine, as other considerations, such as the speed of the cylinder and the speed of the loom itself, prevent this. It must also be remembered that no advantage is obtained in the double-lift with respect to the speed of the cylinder, as in all single-cylinder machines the cylinder must strike for every pick. Any increase of speed will therefore be accompanied by a corresponding increased tendency to puncture the cards and to cause them to leave the cylinder.

All independent single-cylinder motions are driven by means of a crank or an eccentric on the crankshaft. In Fig. 135, motion to the cylinder H is imparted by the crank M on the crankshaft N, through the connecting rod O, levers P and Q, and the adjustable connecting rod R. The rocking shaft S extends from side to side of the machine, and carries a duplicate lever Q and an adjustable connecting rod R at the other side. The cylinder H is supported in suitable bearings at the lower end of the batten T, which swings freely on a screwed centre stud in

the bracket U. Lateral adjustment of the cylinder may be obtained by means of this centre stud, and vertical adjustment by screw V. The pressure of the cylinder H upon the needles is regulated by the slot W in the adjustable connecting rod R. The arrows 2 and 3 in the end elevation indicate the direction of movement of the cranks on the wyper and crankshafts respectively. The benefit of an independent drive being imparted to the cylinder lies in the fact that it can be timed to strike the needles at the most convenient moment in the rising of the griffe, whereas with a "swan-neck" movement no variation of the time of striking is possible.

One of the latest and perhaps best methods of connecting and supporting the cylinders of a double-lift, double-cylinder machine in a slide motion is illustrated in Fig. 136. Many practical men prefer slide motions to swing motions because of their greater rigidity, and because the cylinders come perfectly square on to the needles instead of moving in the arc of a circle. The cylinders A and B are supported at each end of heavy slide rods C, which in most cases slide in simple bushed bearings bolted to or cast on the machine frames D—see K in Figs. 130, 131, and 132. In the present case, however, the slide rods C are supported near each end by grooved steel pulleys E, the small centres of which roll upon the chilled edges of the cast-iron brackets F. Steel plates G are fixed to the front of each bracket F, and are bored for the passage of the slide rod, so that it cannot by any means leave the grooves of the pulleys E. The arrangement forms a very satisfactory application of a well-known anti-friction principle.

The driving of the cylinders is obtained from an eccentric on the wyper or low shaft of the loom; the eccentric is connected to rod H, and acts through it and

levers J and K, fulcrumed on shaft L, on the connecting rod M, which is attached as shown to the slide rod C.

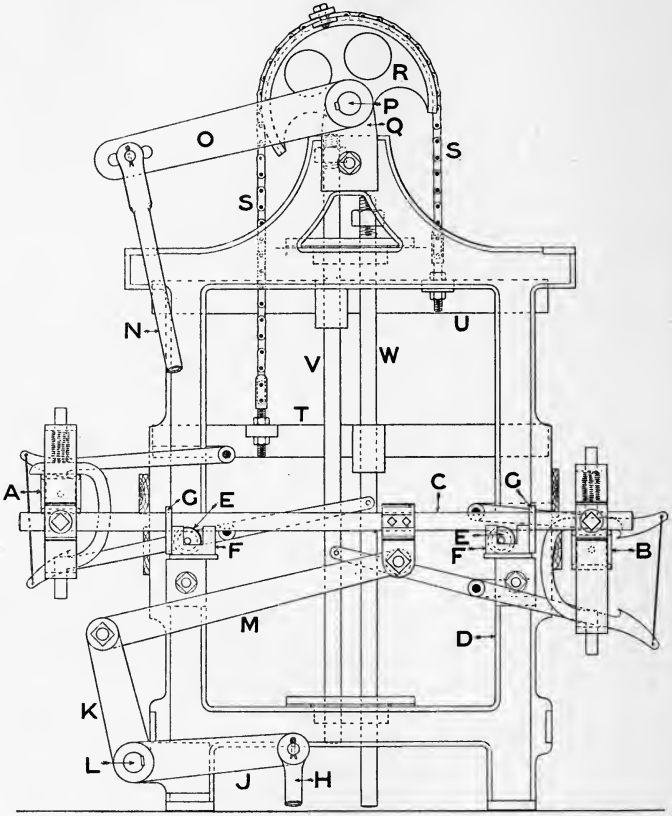

FIG. 136.

Shaft L extends across the machine, and lever K and rod M are duplicated at the other side. The figure also shows what is perhaps the simplest method of lifting the two

griffes of double-lift machines. The method illustrated in Fig. 135 is quite satisfactory when only one machine is required for one loom, but when two or more jacquards are necessary for one loom, the method is not so convenient. The method illustrated in Fig. 136 is suitable for, and is applied to, one or any practicable number of machines, and acts as follows: A connecting rod N, circular in section, and either solid or tubular, or made of rectangular wrought-iron, is carried from a crank of suitable throw on the wyper shaft of the loom, and is connected as shown to the lever O, which is keyed on the rocking shaft P. This shaft is sup-

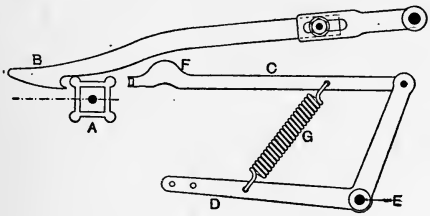

FIG. 137.

ported in suitable brackets Q bolted to the side frames of the machine, and extends over all the machines which are employed on the same loom. Set-screwed at suitable intervals on shaft P are flanged half moons R, to which the steel chains S are fixed. Opposite ends of the chains depend and are fixed as shown, one in a lug cast upon the frame of griffe T, and one in a similar lug on the frame of griffe U. Similar connections at the other side of the griffe frames, together with the action of the usual guide spindles V and W, ensure a perfectly balanced lift, and a vertical travel of the griffes as the wyper shaft revolves.

Reversing Motions.—Messrs. Devoge and Co.'s reversing motion for the card cylinder is shown in Figs. 137 and

138. The former shows the position of all parts when the cylinder A is being rotated in the normal direction by catch B. When it is necessary to reverse the direction of motion, the cylinder A is thrown out clear of the needles, and the pushing bar C is (by means of a cord attached to bell-crank lever D, fulcrumed at E) caused to act upon the corner of the cylinder and rotate it in the reverse direction. The elevation F on the bar C raises the catch B, Fig. 138, clear of the cylinder during this action. The spring G returns the bar C and lever D to their normal positions.

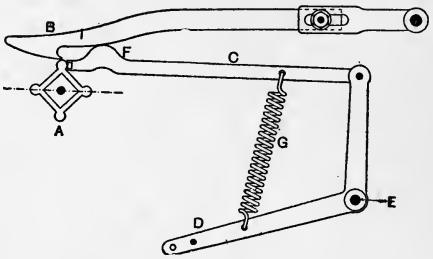

FIG. 138.

Another well-known cylinder driving and reversing arrangement termed the "duck-bill" motion is illustrated in Figs. 139 to 142 inclusive. In a single-cylinder machine, motion is imparted from an eccentric K on the crankshaft L, Fig. 141, to lever A, which is centred loosely on shaft B. Shaft B is mounted on the top rail of the loom, and extends at least to the other side of the jacquard. Keyed to the shaft B are two levers C, one for each side of the jacquard, and about 32 inches apart. Two rods D, one from each lever C, are connected to two arms M, which are bolted to the batten arms N on each side of the jacquard; while the cylinder O is supported and carried

by the battens N. Set screwed or keyed at the extremity

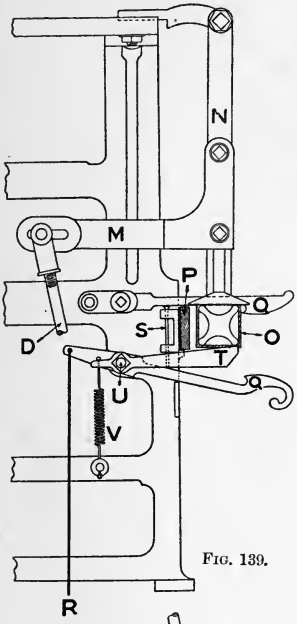

FIG. 139.

FIG. 141.

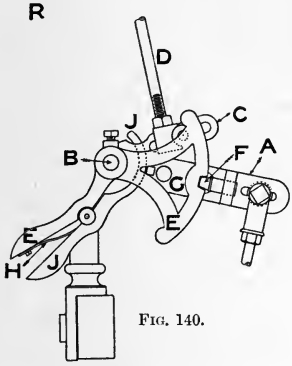

FIG. 140.

of shaft B is the peculiarly shaped lever E, which, through

the recess in the sector portion of this lever, and the

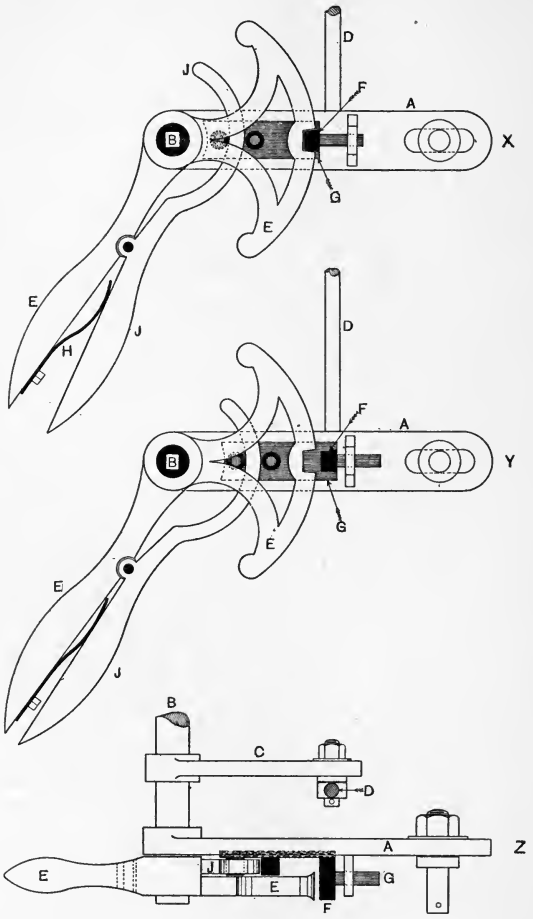

FIG. 142.

projection F of the sliding bar G of the lever A, completes

the driving connection between the eccentric K and the shaft B. The various parts are shown in this position in Figs. 140 and 141, and in X, Fig. 142. The up and down movements of rods D will bring the cylinder O to, and withdraw it from, the needle board P.

To reverse the cylinder with this motion, a double catch Q is used (see also Figs. 132 and 136). The top catch Q rests by gravitation on the head of the cylinder O, but when reversing is necessary, the bottom catch Q is brought into action with the underside of the cylinder O by pulling cord R downwards; the top catch is lifted clear of the cylinder by the same movement, since the lower catch raises pin S, the head of which lifts the top catch clear. The position of the other parts when reversing is necessary is shown in elevation Y, Fig. 142, where it will be observed that the projection F has been pushed out of contact with the recess in the lever E. This being so, it is obvious that the shaft B, the levers C, and further connections to the cylinder, may be actuated manually by the lever E independently of the lever A. The projection F is kept fixed in the recess of lever E by the action of the spring H on the lower arm of the lever J, and the curved portion of this lever passing between the two studs on sliding part G; the disconnection of the levers E and A is accomplished by pressing together the lower arms of E and J, when the curved arm of the latter lever forces forward the part G as shown in elevation Y and in plan Z, Fig. 142. Other methods of reversing are noted incidentally in Figs. 130, 155, 170, and 171.

A simple yet effective means of preventing the corner of the cylinder from coming into contact with the needles is also illustrated in Fig. 139. A short arm T, centred at U, is kept in its present position by spring V and a part of

the framework against which the upper surface of T abuts. The cylinder, if properly turned as shown, can pass and repass the point of T without touching; but if the cylinder fails to turn properly, and remains with two opposite corners in the vertical position, the lower corner will come in contact with the end of arm T as the cylinder advances, and the latter will therefore be placed in its proper position before it can reach the needles.

Double-lift Double-cylinder Machine.—The principal defect of the single-cylinder is of course the high speed at which the cylinder must be driven if much benefit is to be derived by a double-lift machine over that of a single-lift machine of the same capacity. This defect, however, has been overcome by the introduction of a second cylinder. The two cylinders, acting alternately, present the pattern cards to two distinct sets of needles and hooks. A 400-machine of this type (a sectional elevation of which is shown in Fig. 143) contains 816 hooks and 816 needles. The griffes F and F^1 are driven as shown in Fig. 135, from the low shaft, and the knives E and E^1 are inclined in opposite directions as indicated. The two sets of hooks A and A^1, governed by their needles B and B^1, naturally face their respective cylinders C and C^1. These cylinders are supported at opposite ends of a suitable bar or rod, see Fig. 136, which is actuated by an eccentric on the low shaft, and therefore advances the cylinders C and C^1 alternately to their respective needles. This being so, the cards for the design are laced in two separate portions—one containing all odd picks carried as shown by cylinder C, the other containing all even picks laced in the opposite direction or backwards and carried by cylinder C^1, the two sets forming the simple weave M. Since each adjacent pair of hooks is connected by neck-cords K and L to the

same tailcord J, it follows that the top needle of one set

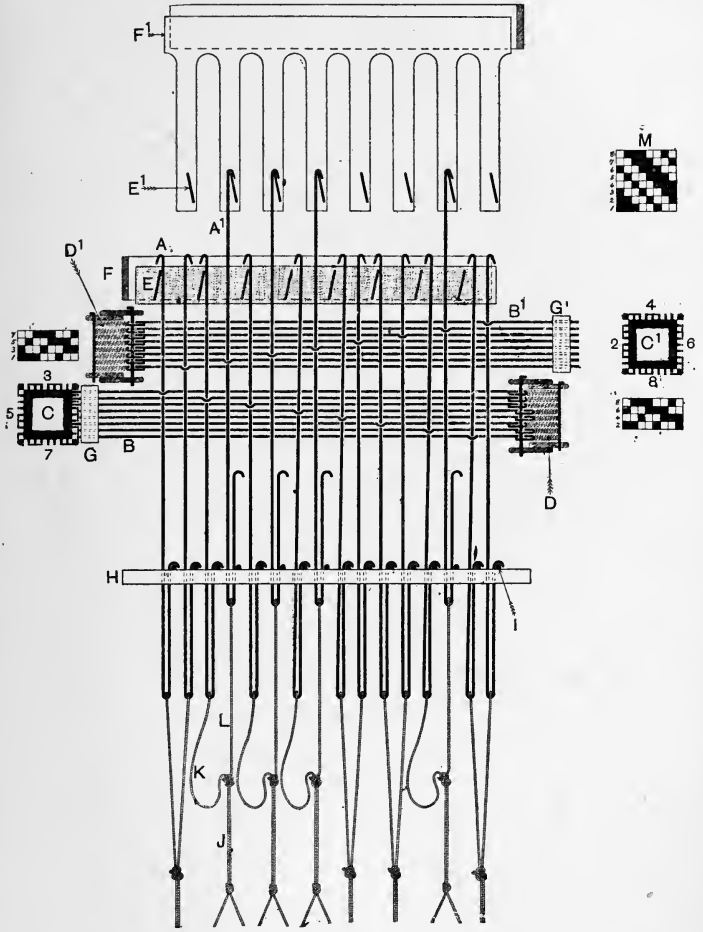

FIG. 143.

and the bottom needle of the other, and so on, will govern

the same thread or threads in the warp. In this machine, as in all others described, the cylinders must be so timed that the knives E, in their upward movement, must be in contact with the hooks A before the cylinder leaves the needles, otherwise those hooks which should remain down might, in consequence of the action of the springs D, be lifted by the ascending knives. It is evident that if both sets of needles B and B^1 were to receive equal movement from their respective cylinders, the hooks A, actuated by the needles B, would be moved at the top through a greater distance than the hooks A^1. Indeed, a variation of movement will take place throughout an entire set of needles from top to bottom. It is, however, minimised in the two sets by adjusting the cylinder C so that it does not advance quite so close to the needle board G as does cylinder C^1 to needle board G^1. For similar reasons it is also a common practice to adjust the spring hammers, which act upon the ends of the cylinder, in such a manner that the cylinders will not advance so close to the bottom edge of the needle board as they do to the top edge. This practice, besides graduating the travel given to the needles from the top to the bottom rows, has the advantage of bringing the pressure of the cylinder on the needles gradually instead of suddenly as would be the case were the cylinder to come against the needles perfectly square. Fig. 143 shows the griffes F and F^1 in their highest and lowest positions respectively; while in Fig. 144 the central position is shown. Here the cylinder C is receding from the needles, being turned meanwhile by the usual catch, while the cylinder C^1 is advancing towards the needles, both of course being about the centre of their travel.

In double-lift machines where a considerable number of harness cords or threads in the warp fall to be actuated by

each pair of hooks, and where the threads require to be up for two or more picks in succession, it is evident that a

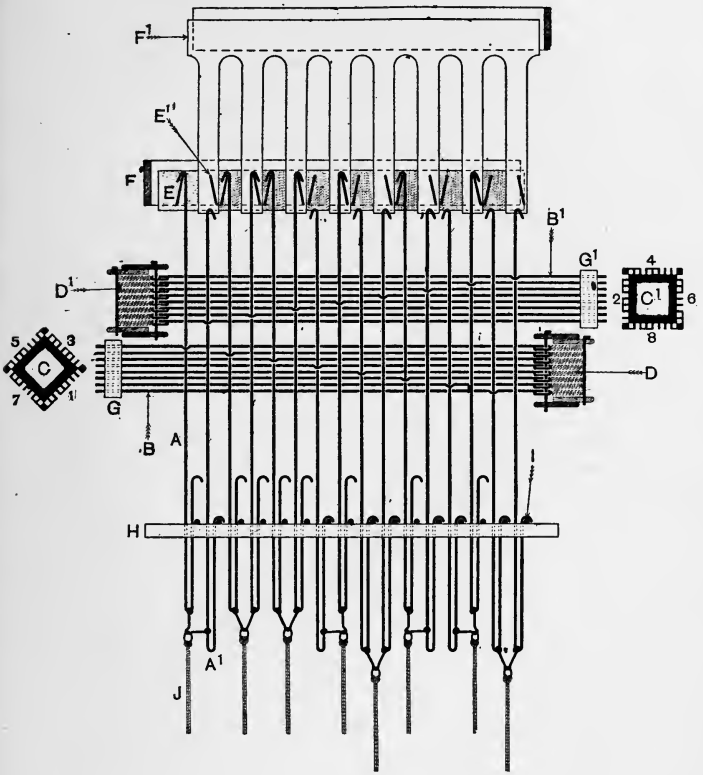

Fig. 144.

great stress will be thrown on the neck-cords K and L, when, in passing the level position, the load is suddenly transferred from the one to the other. This sudden jerk results in frequent breakages of these cords. When both

break, the fault is readily observed in the cloth, but when only one is broken the loom may in some cases run a considerable time before the defect is detected. A link connection, which almost entirely does away with the above source of annoyance, and which has largely superseded the neck cords K and L, Fig. 143, is also shown in Fig. 144. Its form and action will be readily understood from its various positions in the figure. In Figs. 143 and 144 similar letters refer to parts of a similar nature.

In double-lift double-cylinder machines the main disadvantage is the liability of the cards on the two cylinders to get out of their proper rotation; especially is this the case with inexperienced weavers. This fault has led to the introduction of various stop motions, the purpose of which is to bring the loom to a stop when the cards get out of order. One of the simplest and most widely adopted is that of Messrs. Devoge and Co., illustrated in Fig. 145. It consists of two special hooks A and B controlled by special needles C and D, and of spring wire E fulcrumed on a pin G in a special bracket H. One end of the wire E passes through a coil formed on the hook B, and is therefore controlled by this hook; the other end of E is bent upwards and passes, as shown, through a loop on the needle C. All these parts are arranged on the machine at the driving side of the loom, and hook A is attached in a suitable manner to the set-on handle. Since the needle D is provided with a spring at its rear end (as usual), the normal position of hook B is on the knife. The spring J of the needle C, however, is at its forward end acting between the needle board K and a collar L on the needle, consequently the normal position of hook A is off the knife of the opposite griffe. When in this position—that of rest—the end of the needle C is flush or level with the face of

the needle board K, as shown. It is obvious that if the hook B be lifted, the needle C will, by the action of spring

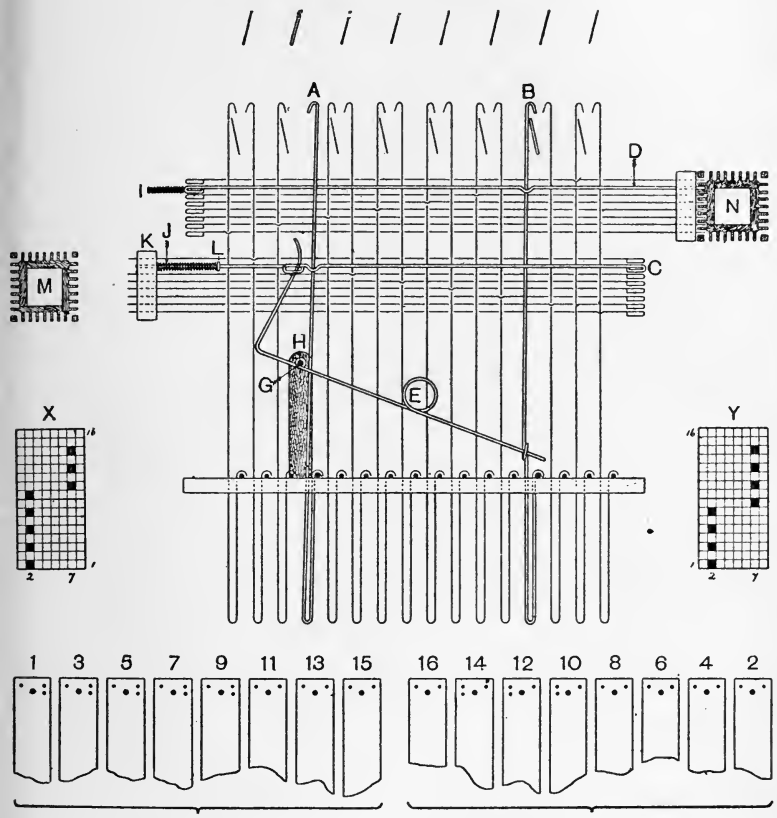

FIG. 145.

wire E, be pressed forward until its point projects beyond the face of the needle board, at the same time placing the hook A on the knife. It is therefore evident that to prevent

the hook A being lifted and the loom set off, the card on the cylinder M next presented to the needles must be uncut or blank opposite the needle C. Clearly, then, a hole in the card on cylinder N must always be followed by a blank in the card on cylinder M, if the loom is to continue running. The simplest order of cutting to obtain this is, of course, all holes on N and all blanks on M. This order, however, would be ineffectual for stopping the loom where one set of cards was any even number in advance of its proper time, and would therefore never be adopted. A suitable order of cutting the cards is shown at the bottom of Fig. 145, the odd-numbered cards being for the cylinder M and the even-numbered cards for the cylinder N. The lacing and peg holes are cut in each card, while the holes cut in approximately the same line as the peg hole are those which are intended for the needles C and D. These are in the second row for cylinder M, reading from the top needle; and the seventh row for cylinder N, reading from the bottom.

Any suitable order of cutting may be adopted, but the cards in the repeat should, if possible, be a measure of the total number employed, although this is not absolutely essential. If the cards shown in the figure followed each other consecutively the hook A would never be lifted, as it depends for lifting on a cut on the cylinder N being followed by a cut on the cylinder M. It is also obvious that if either set of cards gets 8, 16, 24, etc., places in advance of the other set, the same order of cutting would obtain and the loom would still run. This may seem an argument in favour of increasing the number of cards in a repeat of the arrangement; but it must be remembered that the loom will not always stop immediately the cards get wrong, for in the arrangement given the loom may run a maximum

number of 14 picks before being stopped, and as the cards in a repeat are increased this maximum number is also increased.

The order of cutting is indicated alongside the design proper, or on a detached piece of point paper (as shown at X and Y), which the card cutter may adjust to the design as he or she proceeds with the cutting. The order shown at X is that cut on the cards in the figure; the alternative order of cutting shown at Y for the same number of picks is probably the better of the two, since where there is an equal number of cuts to each cylinder in the repeat, it is evident that the number of opportunities for the action of the stop motion will be at a maximum, seeing that the conditions for stoppage are that a cut on N is followed by a cut on M.

Fig. 146 is a front view of the single-lift jacquard machine shown in Figs. 130 and 131. It is introduced principally to show the position of the heck and its necessity where jacquard shedding is applied in wide looms, as well as to illustrate a few minor details. The heck consists of a suitable number of steel wires A supported in and kept equi-distant by a flat wooden frame B, the dimensions of which must be somewhat greater than the area occupied by the hooks. The heck may be supported in position in various ways, but in this instance it is fixed between the parts C and D, the former of which are fixtures to the beam E supporting the machine, while the parts D are screwed to the part C and kept in position by snibs F as shown. This arrangement enables the supported parts D to be withdrawn from under the heck so that the latter may be lowered in order to facilitate the mending of broken harness cords. The position of the heck, through which all harness cords

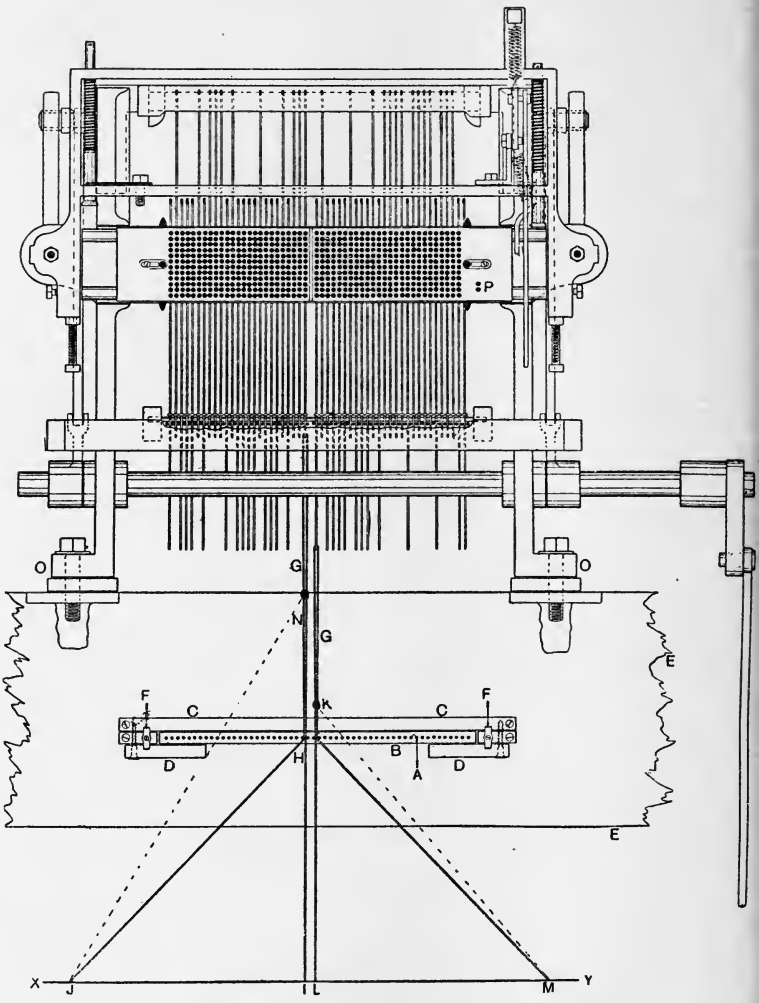

FIG. 146.

must pass, is a little below the point of connection of the latter to the neck bands G when in their lowest position. The purpose for which it is introduced is to enable an equal lift or level shed to be obtained from selvage to selvage of the cloth, as well as to ensure that the pull of the harness cords will be in the same vertical line as the hook to which they are connected.

Suppose X Y to represent the comberboard through which all harness cords pass: it is obvious that when a heck is used the distance from J to H will remain constant, and therefore the lift at J and at M, or at any intermediate point in the comberboard, will be the same as that given to the hook. The dotted lines K M and N J represent the positions which these harness cords would assume in their lowest and highest positions were no heck used. The right-angled triangle K L M may be assumed as of the following dimensions:—

Length of cord K L, say 64 ins.

Length of comberboard between cords L and M, say 60 ins.

$$\therefore K M = \sqrt{K L^2 + L M^2}$$
$$= \sqrt{64^2 + 60^2}$$
$$= \sqrt{7696}$$
$$= 87{\cdot}7 \text{ ins.}$$

Suppose the lift to be 4 ins.: the lifted cord K L now represented by N I will be $64 + 4 = 68$ ins. I J = L M = 60 ins., and

$$N J = \sqrt{N I^2 + I J^2}$$
$$= \sqrt{68^2 + 60^2}$$
$$= 90{\cdot}7 \text{ ins.}$$

But $90{\cdot}7 - 87{\cdot}7 = 3$ ins. of a lift on harness cord N J as compared with the above-mentioned lift of 4 ins. on harness cord N I, showing a faulty lift of 1 in. at a point 60 ins. from the vertical, in this case the centre of the cloth. This difference of lift gradually diminishes as the vertical point is approached, but the minimum lift obviously occurs at the two selvages, just where the maximum lift would be of the greatest advantage.

One disadvantage of the heck—which, however, cannot be avoided—is the excessive friction generated between the harness cords and the steel rods of the heck, even although the rods are highly polished and free to rotate with the moving cords. To minimise this friction as much as possible, the jacquard, especially in wide looms, should be placed as high above the comberboard or harness reed as circumstances will permit. When the machine is set so that the cards hang over the end of the loom, the rods (9 for a 400-machine and 13 for a 600-machine) pass between the long rows of the harness cords, and consequently may be much greater in diameter than those represented in the figure.

Due to atmospheric and other changes, the harness cords sometimes vary in length, and so produce a faulty shed. To meet these changes, and to ensure that the warp threads shall occupy their proper positions on the race board of the lay, a method of adjustment frequently adopted is shown at O. This consists of adding thin wedges of wood or paper under the feet of the machine to increase the thickness of the support O between the beam E and the feet, or of removing the necessary amount to decrease the thickness of the support. As an alternative the distance of the feet of the machine from the supporting beams may be regulated by means of set screws. Another

method often adopted is that of making the sword of the lay in two portions, so that it may be increased or decreased in length, and the lay lifted or lowered to suit the level of the warp threads. In some extreme cases the loom itself may be raised bodily from the weaving shed floor.

To dispense with the necessity of punching every card of the design for a selvage, extra hooks actuated by bent needles are introduced into this and other machines. At a point P, on each face of the cylinder, and clear of the end of the card, extra holes are drilled for these bent needles to work into independently of the cards. It is evident that with this arrangement, and the cylinder drilled to suit, any type of selvage, repeating on two or four picks, may be obtained.

Cross-border Jacquards.—In by far the greater majority of woven figured jute fabrics (with the possible exception of Brussels and Wilton carpeting) no cross-border or other similar effect is ever introduced. In the particular exception mentioned, the carpet or "square" is made up to the requisite size from a number of widths of 27 ins. each and equal in length, cards being cut to cover this length, which rarely exceeds four yards; the width of the square in all cases is, therefore, a multiple of three-quarters of a yard. On the other hand, however, considerable quantities of figured linen fabrics are made in bordered cloths, such as table damasks, napkins, etc., necessitating two distinct sets of cards for the alternate working of the border and of the centre of the cloth. Where each design (border and centre) is of such an extent that only one repeat of the centre is necessary to complete the cloth (see Figs. 130 to 133, Textile Design: Pure and Applied), the cards may be, and sometimes are, in one continuous chain—*i.e.* two repeats

of the border on end, but laced in opposite directions with one repeat of the centre cards. This is, of course, practically one-half more cards than actually represented by the two designs, but the introduction of the extra border set is necessary in order that the pattern of the cloth may be developed in proper sequence. In the great majority of cases, however, the design of the cloth is such that the centre pattern is repeated two or more times between the cross borders, as well as between the side borders. For this character of design it is usual to have the cards for the centre and the cards for the cross border laced in two distinct sets, and each set brought into operation on the machine when necessary. The simplest method of bringing about this change of cards, and that which is yet widely practised, is where the change is made manually by the loom attendant or other operative specially employed for that duty. Where this practice obtains no special machine is necessary, and probably this is the main reason why it is still so extensively adhered to. The time lost, however, by this method of changing has led to the introduction of various devices and of special machines peculiarly adapted for cross-border or other similar work where two sets of cards are required to act at different times on the same threads of the warp.

One of the simplest of these devices is that developed by Messrs. Devoge and Co., who can arrange their double-lift, double-cylinder jacquards so that they may be actuated as two separate single-lift, single-cylinder machines; one griffe, with its corresponding cylinder, hooks, and needles, acting for one set of cards, the other griffe, etc., acting for the other set. Where this is the case each griffe is actuated as required by its separate

connection from the crankshaft, the method of driving and of bringing the different cylinders into action being

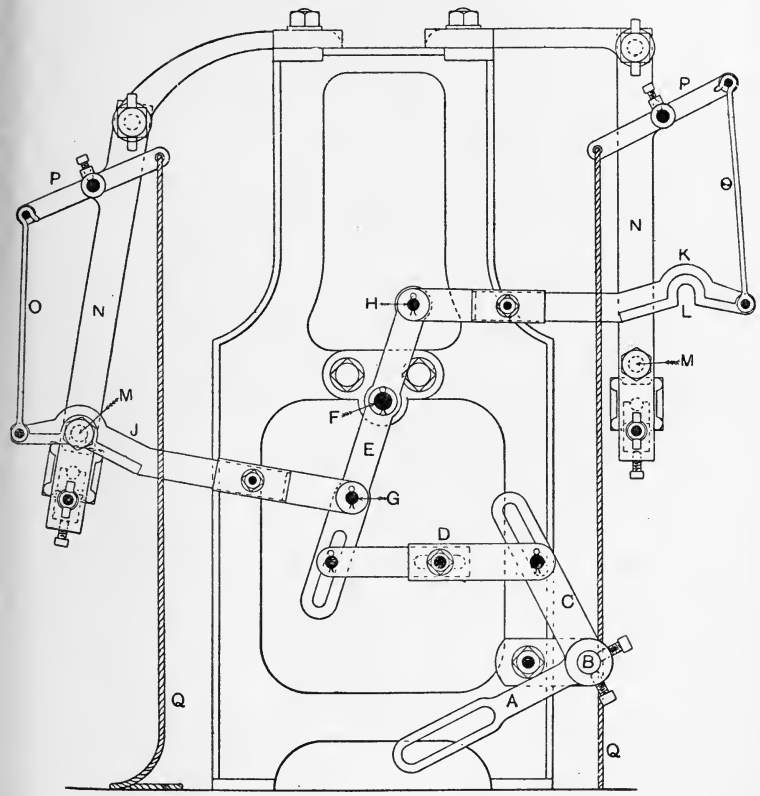

FIG. 147.

shown in Fig. 147. Motion is taken, as is usual for single-cylinder machines, from the crankshaft by a connecting rod to lever A, set-screwed on shaft B, which extends across the machine, and carries (set-screwed near

each side of the frame-work of the machine) a lever C, which by link D imparts motion to a double-armed lever E fulcrumed at F. At two points equi-distant from F on lever E, two studs G and H are fixed, which carry the connecting arms J and K. Each of the latter arms near its extremity is provided with a recess L, which when required takes hold of the body of a stud M, which projects from the side of each swing batten N. Arms J and K are under the control of the weaver by means of links O, levers P, and cords Q. If both arms J and K were in connection with their respective studs M, it is evident that both cylinders would approach the needles simultaneously. On this account the makers claim that a 400's machine of this type may be used as the equivalent of an 800's single-lift, single-cylinder machine. When used as a cross-border machine it is of course obvious that only one link, J or K, will be in connection at one time, as shown.

Another device, introduced by Messrs. Davenport and Crossley, which practically constitutes a special machine, is shown in Fig. 148. It consists of an ordinary double-lift, single-cylinder machine, the needles A of which are made longer than the ordinary needles between the hooks B and the spring-box C. Each needle (besides controlling two hooks B as in an ordinary double-lift, single-cylinder machine) is cranked between the last hook and the spring-box to receive the lower end of a vertical lever or wire D, the upper end of which passes through and is controlled by an eye in its corresponding supplementary needle E. Behind each row of vertical levers D a rod F passes to serve as a fulcrum against which levers D can act. Supplementary needles E have no spring-box, as the springs on the ends of needles A

serve to return both sets of needles to their normal positions. It is evident that a blank in the card acting on either cylinder would move the corresponding hooks in the same direction—that is, off the knife. The action of cylinder G, which usually carries the centre cards, is

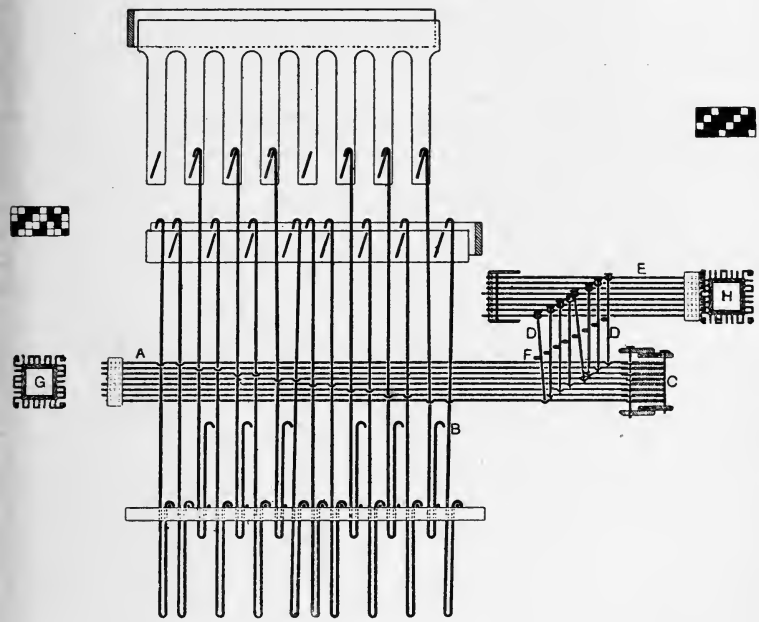

FIG. 148.

already well understood; and the action of cylinder H, which in general carries the cross-border cards, is shown in the figure where blanks in the card opposite the fourth and eighth needles have caused the said needles through levers D to pull back the corresponding long needles A just as if cylinder G had acted directly. The

cards for cylinder G are laced and wired in the usual manner, but the cards for cylinder H, while cut and laced in the usual way, are wired on the opposite side in order that the reverse side or back of the card may be presented to the needles E.

The method of bringing each cylinder into operation

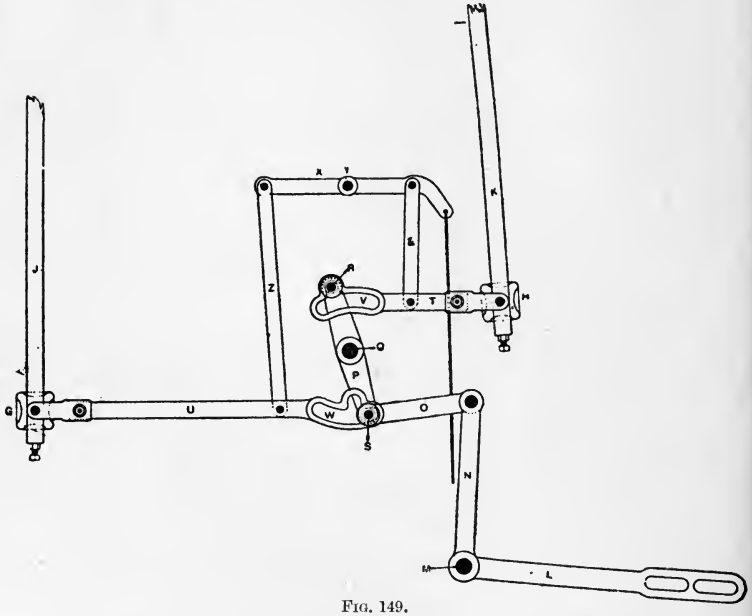

FIG. 149.

as required is illustrated in Fig. 149. Cylinders G and H are suspended as usual by their respective battens J and K, and receive motion from the crankshaft through an ordinary connecting rod attached to the lever L fulcrumed on shaft M, which extends across the machine. From M, connections to the cylinders are as follows, and are duplicated at the other side of the jacquard :—Lever

N and link O impart motion to an equal armed lever P centred upon stud Q. P carries near its ends projecting studs R and S, which, when desired, may actuate spanners T and U respectively, and through them the cylinders H and G. Spanners T and U are provided with concentric slots V and W, which are recessed at a suitable point to receive the studs R and S. Stud R is in the recess of V, while stud S is in the concentric slot of W. It is therefore evident that any movement imparted to lever P, through parts L, N, and O, will cause stud R to transfer a similar movement to the cylinder H, while at the same time stud S will simply move backwards and forwards in the concentric slot W. Spanners T and U are so connected by lever X fulcrumed at Y and links Z and &, that by pulling on the cord attached to the extremity of lever X they are brought into the positions shown; but by releasing the said cord, T is raised and U lowered until stud R can move in the concentric slot V, while stud S is placed in the recess of slot W. Cylinder H is thus placed out of action and cylinder G brought into action. The principle of this machine may be, and sometimes is, applied to a single-lift jacquard.

An alternative and possibly simpler method of driving the card cylinders G and H in the cross-border machine illustrated in Fig. 149 is shown in Fig. 150. Motion is taken as usual from a crank or eccentric on the crank-shaft through the rod A, lever B, and shaft C, to a short lever D which is set-screwed on shaft C. Attached to the end of the lever D is a short connecting rod E, which carries, bolted to its upper end, a peculiar headpiece F. This latter is cast with a recess or notch in each edge for the purpose of engaging at will with either of the studs J or K bolted respectively near the ends of the levers L and

M. These latter are set-screwed respectively on shafts N and O, which stretch across the machine and carry at each

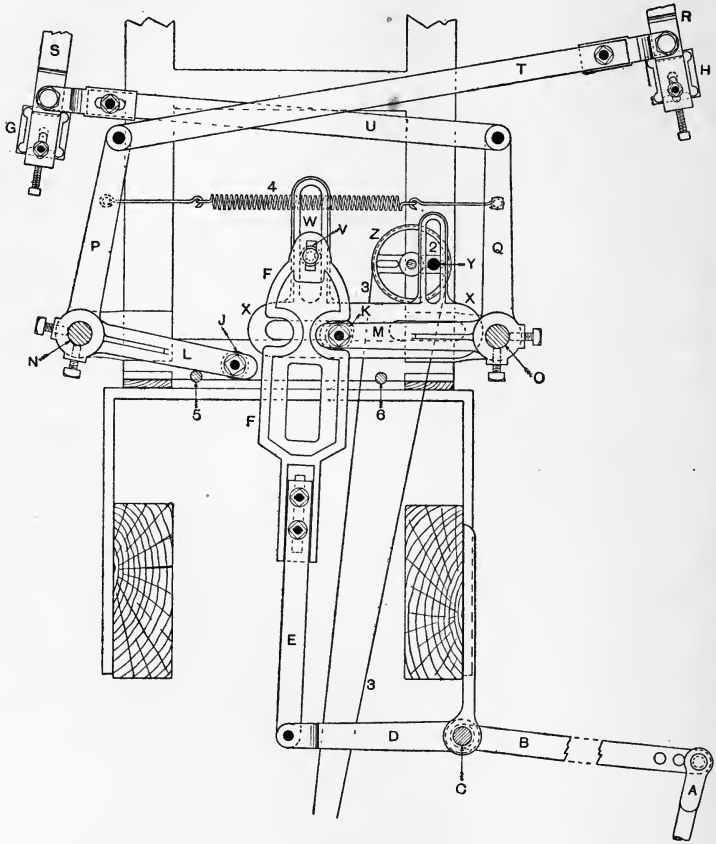

FIG. 150.

side the further levers P and Q, to which the swing-battens R and S are connected by means of the links or spanners T and U. In the figure the recess on the right of F is

represented as being engaged with the stud K of the lever M; the cylinder G will therefore be actuated, through the medium of the lever Q and link U, as the headpiece F rises and falls. The latter is supported approximately vertically, and is guided in its upward movement by means of a stud V which is bolted to F near its upper end and projects into the slot W of the sliding piece X. So long as it is required to work the cylinder G, this sliding piece X is retained in its present position; but when the cylinder H is required in action, X is moved to the left of its present position by rotating the crankpin Y through 180°. This crankpin is fixed in the pulley Z, and moves in the slot 2 of the sliding piece X. The change is accomplished from the weaver's position by a strap or chain 3 passing over and fixed to the flange pulley Z. In this manner the headpiece F is caused to release the stud K of the lever M, while the recess on the left is made to engage with the stud J of the lever L, and so actuate the cylinder H. It is obvious, as well as desirable, that this change can only be effected when the headpiece F is in its lowest position with both cylinders full out. The cylinder, which for the time being is at rest, is of course held in this position by the action of the spiral spring 4, which connects the levers P and Q. Adjustable stops 5 and 6 are suitably supported to retain the levers L and M in the most convenient position for effecting the changes, while suitable studs—not shown—support and guide the sliding piece.

A special machine introduced some few years ago by Mr. Robert Hutchison, Dunfermline, and now extensively used in and around that centre of damask weaving, is that shown in Figs. 151 and 152. It is a single-lift machine, and has the advantage of having only one set of

needles A. Each needle is cranked or looped round a double upright or hook B, the heads of which face in opposite directions to cylinders C and D. The needles

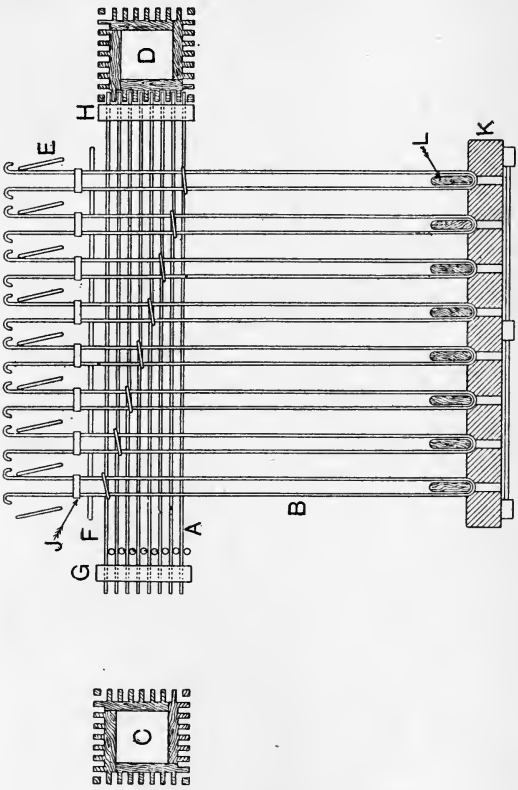

FIG. 151.

A have no springs, as each double hook is a spring in itself and returns to the normal position when the needle is released by the cylinder in action. Between each pair of uprights B and under the knives E a flat bar F is fixed,

which assists in retaining the hooks in a vertical position, regulates the extent to which the needles may project

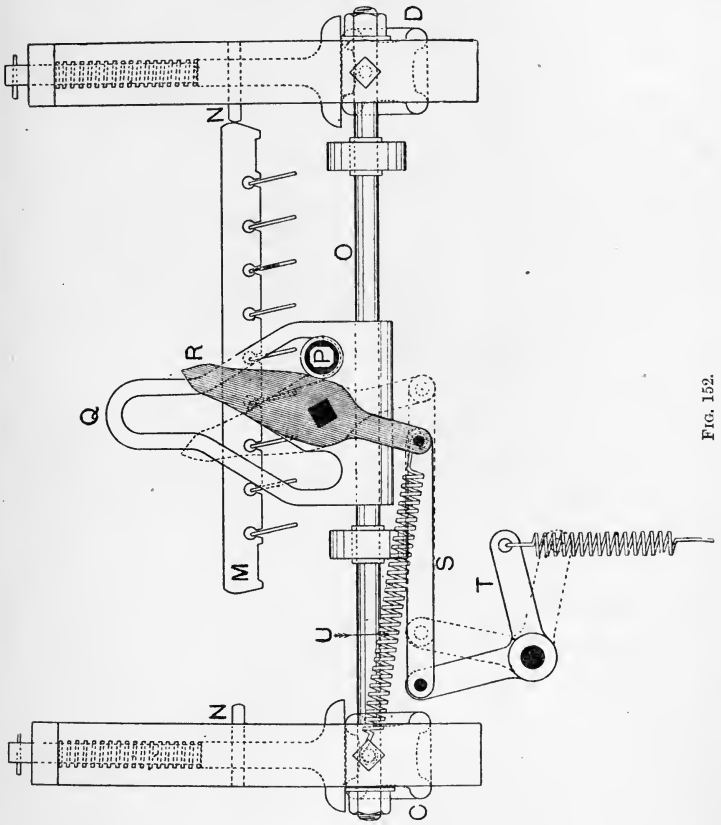

Fig. 152.

beyond the face of the needle boards G and H, and at the same time serves as a fulcrum for, and virtually creates the spring in, the hooks. Excessive friction between uprights B and bars F is prevented by a stop-

band of tin J, which is soldered to one upright and encircles both. The uprights rest, as shown, on a grooved board K, while a flat wooden bar L serves to keep them facing the cylinders.

When cylinder D is in action the threads in the warp will be lifted by the action of the knives E on the right-hand hook of each double upright B; but when cylinder C is in action the shedding is performed by the action of the same knives on the left-hand hook of each double upright. Clearly, then, an alteration in the position of the knives from that shown in the figure must be effected. Each knife rests in a V-shaped slot, and is capable of being rocked in the said slot by two bars M, which are moved into position by a projection N on the side of the batten as either cylinder is brought into play. This action of course takes place when the knives (nine in a 400's and thirteen in a 600's) are in the lowest position, and therefore clear of all hooks.

The cylinders C and D are supported at opposite ends of the slide rod O, and are actuated from the griffe through stud P and double swan neck Q. Either neck may be opened or closed at will by a switch R through the medium of link S, bell-crank lever T, and spring U. When cylinder D is in action, the switch R occupies the dotted position, and although both cylinders are moving together, that which is considered out of action approaches the needles only half-way. With the switch R in the position shown, it is obvious that stud P will next descend into the left-hand groove of the swan neck. Cylinder C will thus be brought into contact with the needles, and bar M will, by the action of projection N, cause the knives E to incline to the right.

A newer form of double upright for the machine just

described is shown in Fig. 153, while a part plan of the

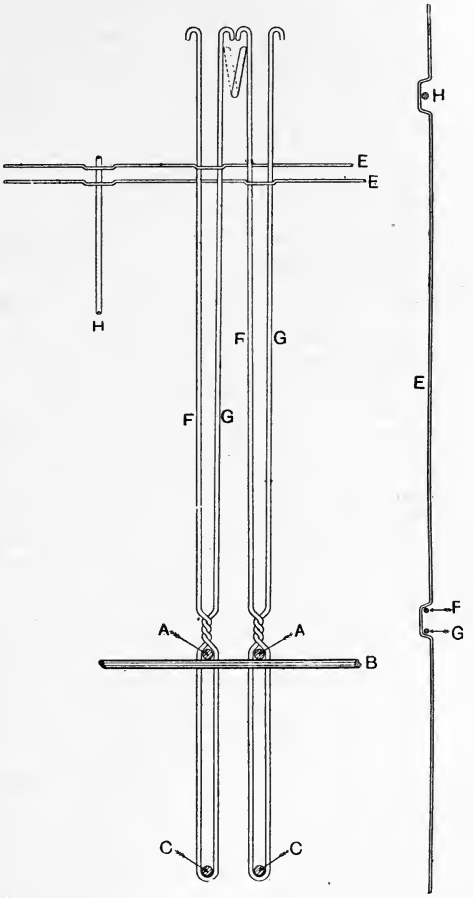

FIG. 153.

lower rods is shown in Fig. 154. Its form will be readily understood from the illustration, and it is supported when

in its lowest position by rods A immediately under the twisted portion of the upright. Transverse rods B support rods A, and keep the hooks facing the cylinder. Rods C at the bottom of the uprights are fixed in a framework D which is connected to and moves with the griffe. Rods A and C serve as resisting points to the action of the needle E upon the upright, preventing it moving bodily in the direction of the thrust, and of course confining the needle's action to one or other of the arms or hooks F or G. Each hook is thus constituted a spring in itself, and returns to the normal position immediately the cylinder recedes.

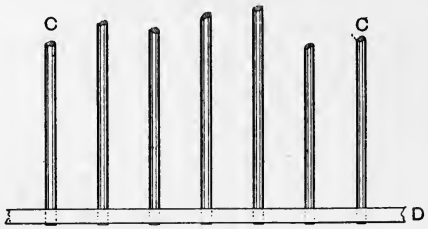

FIG. 154.

Wire H limits the movements of the needle in both directions.

Another device introduced for expediting the change of border and centre cards, and one which is also largely used in the Dunfermline district, is illustrated in Fig. 155. The cross-border portion is simply an addition to the ordinary single-lift machine illustrated in Figs. 130, 131, and 146. All parts to the left of the framework are supported by spindles A, and are moved to and from the needles by the action of a common swan neck. The arrangement consists principally of two cylinders B and C, set approximately at right angles to each other, and carried by the two arms D and E of an L-shaped bracket,

which is centred on a shaft F at the junction of the two arms. Keyed to the same shaft is a lever G, by means of which, through cords H or I, either cylinder with its respective cards may be brought into position opposite

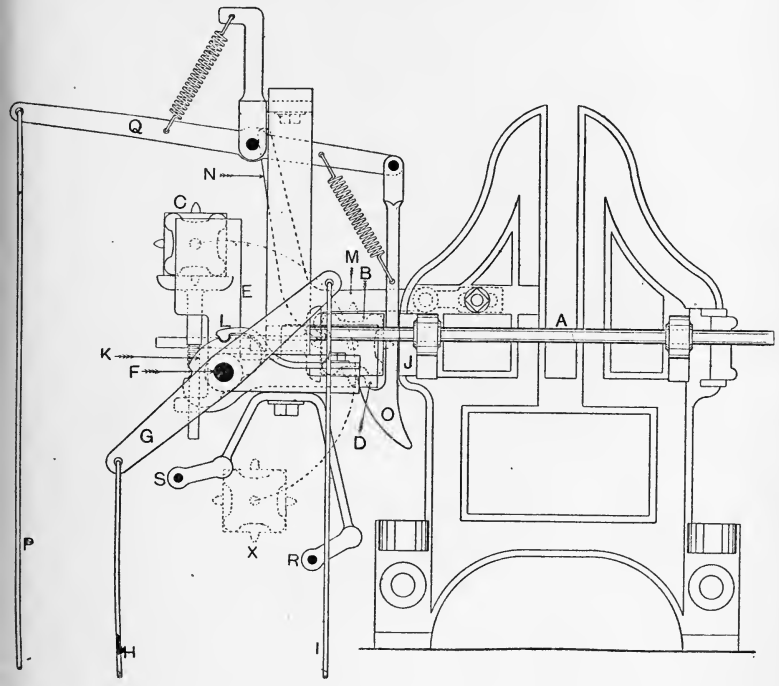

FIG. 155.

the needle board J. The extent of movement from the one position to the other is restricted by a sector piece K having two recesses in its periphery, into either of which, as the case may be, the head of the spring L can rest. When cylinder C faces the needle board, cylinder B occupies the dotted position X. The normal or forward

pulling catch M is provided with an arm N which projects over the cylinder C while the latter is being moved into position opposite the needles. The reversing of the cylinder is brought about by catch O through cord P and lever Q. In the case of the cards being required to work in the backward direction (that is, for patterns symmetrical in the way of the weft) a second catch will be necessary to act upon the underside of the cylinder. Rollers R and S guide the cards to and from their respective cylinders B and C. A recent improvement in this motion consists in placing the cylinders B and C nearer each other so that the two arms of the bracket L make an angle of considerably less than 90°. The result of this alteration is that when cylinder C is moved into action, cylinder B does not move so far out as indicated by the dotted position X, consequently a better fall is obtained for the cards from cylinder C. Moreover, since when in this position the face of the cylinder B is held in a diagonal position instead of in a horizontal one as shown at X, there is not the same tendency for the cards to catch the corner of the cylinder, nor to collect on its upper surface. Further minor improvements have been effected with the view of simplifying the operation of changing and of imparting greater steadiness to the cylinder in action.

Verdol Fine Index Machine. In linen damask factories and in other factories where jacquards are extensively used for the production of elaborately figured fabrics, the question of the lighting of the factory, or perhaps the excessive obstruction of the light by the cards, as well as the question of the storage of the cards not in actual use, becomes a very serious matter indeed, even if the initial cost of the cards be left entirely out of

consideration. With a view of mitigating the above defects which always accompany the use of the standard size of jacquards, machine makers have from time to time introduced jacquards of finer pitch, both direct acting, and indirect acting. What is perhaps the finest pitch direct acting jacquard has already been referred to, see Fig. 133, page 216, and although there are many pitches intermediate between 4 mm. and the standard British pitch, it has been considered unnecessary to refer to them as no new principle is involved. Of indirect acting jacquards there are one or two types, but only one, the Verdol patent, has been extensively adopted. In this machine card-saving seems to have reached its limit, since a card of 896 needles capacity measures only $12\frac{3}{4}$ ins. by $1\frac{1}{12}$ ins., or say an area of 14 square inches as compared with $16\frac{1}{4}$ ins. $\times$ $3\frac{1}{2}$ ins., or say 56 square inches for an ordinary 600's standard British pitch card; this means a saving in area alone of about 83%. Since the thickness of the new card is only that of good note-paper, a considerable saving in weight is also effected. Against these advantages must be set the consideration that the very smallness of the card necessitates a very fine pitch of the indicating needles—3 mm. from centre to centre—a pitch which demands fine and delicate wire, accurate workmanship, and careful fitting of the moving parts of the machine; in addition, such a fine pitch permits of no latitude for the fluctuation of the size of the card due to changing atmospheric conditions. It is true that the makers claim to have solved this difficulty by means of specially prepared paper, but notwithstanding this improvement considerable difficulty is often experienced due to expansion of the cards during a wet week end.

In Fig. 156 parts of 3 cards for an 896 needle machine

are shown along with a part sectional elevation of the jacquard. From A to B shows one half of the cards cut for the pattern, while the lower or incomplete portion is fully cut to show the zig-zag or hexagonal arrangement of the holes—an arrangement which utilises to the utmost the space of the card, in addition to retaining the maximum strength of the paper. The ordinary paper is strengthened at each end and in the centre of the card—which is in the form of a continuous strip—by the addition of an extra layer of stout paper so that it may better withstand the action of the pegs or studs C of the card wheels D, by which the cards or rather the continuous strip of paper E is rotated when in position. These extra layers of paper are represented by the criss-cross marking at A and B. Three large holes are shown in the end and the centre of each card, but the pegs C naturally work into only one hole at a time; should this hole, say the centre one of the three, get unduly worn, a simple change is provided by means of which the pegs C may be set to take either one or other of the outer holes, and so counteract faulty placing of the card due to worn peg holes.

To the right of the needle board F the jacquard is of an ordinary type but springless. Each hook G is a spring in itself, and all are retained in the normal or upright position over the griffe blades H by the resistance of the rods J, unless the corresponding needle K is pushed backwards. The full jacquard has 16 hooks and needles per row, and two rows of 8 holes each on the card correspond with one row of 16 needles and hooks. The board L is moved outwards positively as the griffe falls, but is returned by spring action as it rises—this ensures that all needles K will resume their full forward

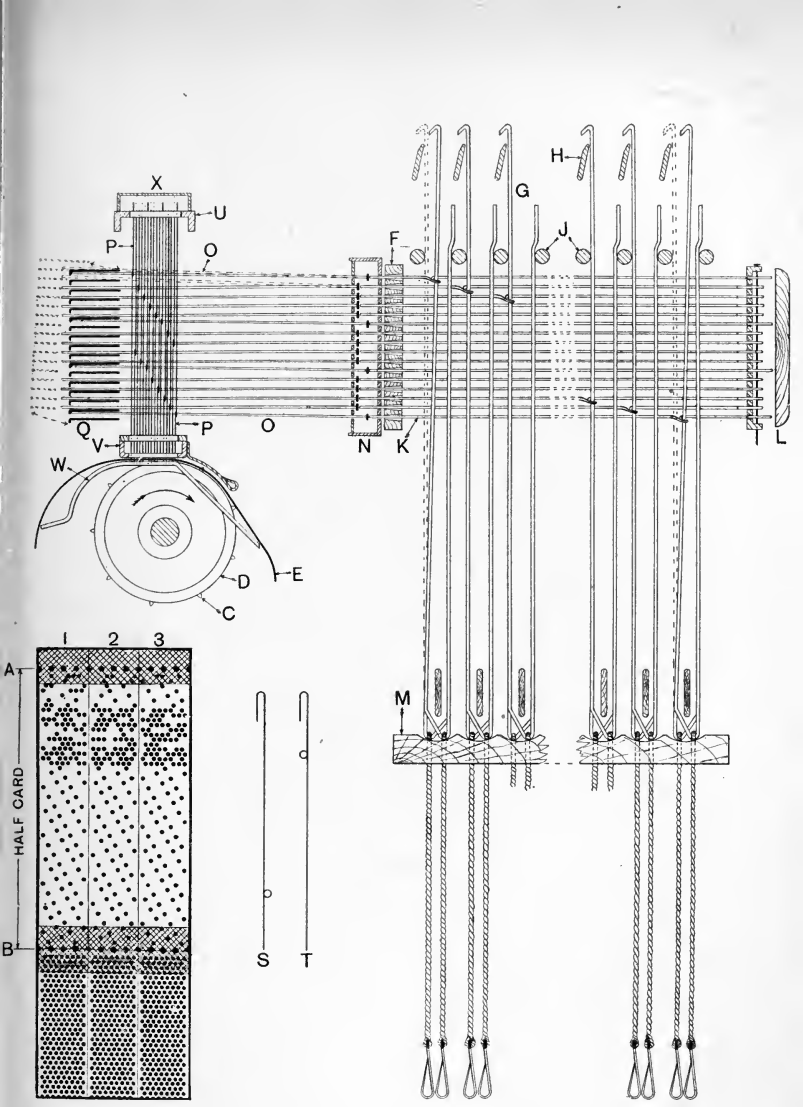

FIG. 156.

position. The jacquard proper is not very closely set, the pitch of the needles K being 5 mm. or practically 5 per inch. It may be made as a centre shed machine if desired, but is widely used as an ordinary bottom shed jacquard; the illustration represents one of the latter type. In the centre shed machine the doubled part of the hook is continued above the head of the hook for about 5 inches, and the hole board M is arranged to fall and rise respectively in unison with the rise and fall of the griffe.

To the left of the needle board F, an auxiliary machine is provided which performs the selecting part of the jacquard, and indirectly presses back the needles K and the hooks G of the jacquard proper. Each needle K, after passing through the needle board F, enters a perforated plate N, and abuts against the enlarged end of a supplementary needle O. Each needle O in turn passes through a looped eye formed on a vertical needle P, and is normally supported by one or other of a series of steel plates Q. The vertical needles P are formed in two series of eight each, as shown detached at S and T, in order that they may occupy two rows of holes on the card and yet act upon the same row of needles O. The tops of needles P are supported by a specially slotted grate U, while their lower ends are all entered in a double guide plate V; if required the tips of the needles P may pass through the card E and the supporting needle plate W. All needles P are free to move vertically as far as the cover X will permit, and all are moved vertically every pick as the griffe rises in order that their tips may be clear of the card E to permit the latter to rotate for the next selection. Vertical movement of needles P is obtained indirectly as follows: the steel plates Q, seventeen in number, are firmly fixed in a framework of brass, and all move outwards and rise

slightly coincident with the rising of the griffe—see dotted positions. This movement raises all needles O, and through them the vertical needles P, so that the card sheet may be advanced. But it will be observed that all plates Q are turned down at the front to such an extent that they just leave sufficient room for the free passage of the ends of the needles O if the latter are in their lowest position. If, therefore, the card E is uncut at any point, the corresponding needles P and O will remain in the higher plane, with the result that the ends of all such needles O will be caught by the bend of their respective plates Q as the latter move inwards with the falling of the griffe. Inward movement of any needle O is necessarily transmitted to its corresponding needle K and hook G so that the latter is pressed back clear of the griffe blades.

The movements of the machine are few and exceedingly simple. The griffe is raised and lowered in any well-known manner; the plates Q are reciprocated, raised and tilted, and the cylinder turned by swan-neck movements — simple mechanical contrivances which we have considered unnecessary to show. As indicated, however, trouble is experienced with the expansion of the cards, and also with fluff gathering in and choking the grate, and so preventing the free fall of the needles P and O. The latter difficulty may be partially overcome by placing a loose board on the top of the vertical needles P, but regular cleaning of this part of the machine with paraffin is almost essential.

Originally invented in 1884, this machine seems likely to remain the finest pitched mechanically operated jacquard. It is somewhat extensively used on the continent, but has only obtained a restricted adoption in this country.

Card Frames.—One of the chief essentials to the satis-

factory working of a jacquard, whether employed on ordinary work or on cross-border work, is a proper card frame or cradle. In general, little difficulty is experienced in getting the cards to work forwards or in the normal manner—that is, advancing over the top of the cylinder,—but when required to work backwards they often prove

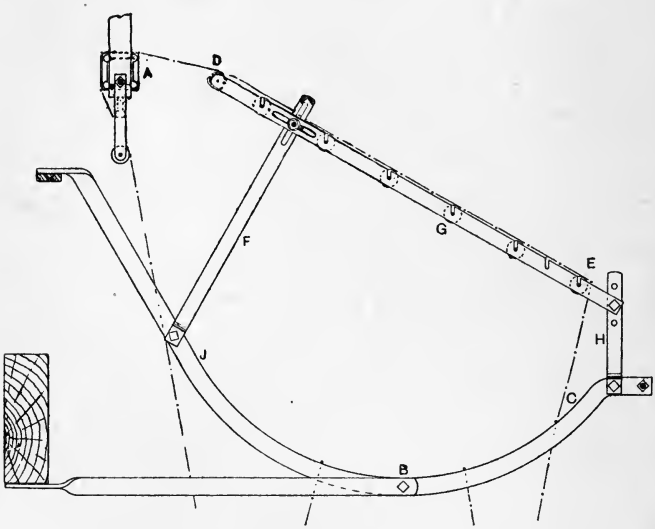

FIG. 157.

troublesome. Several faults tend to cause this, the chief one usually being a want of sufficient height or "drop" from the cylinder A (Fig. 157) to the bottom of the frame B. Other objectionable points are:—A flatness of the frame about C, which causes the wire to linger in its travel—if not to stop altogether—and the cards to slacken up; also a want of sufficient support from D to E, which allows the cards to sag between the rollers. These latter should

be spaced not over 5 ins. apart for 400's cards, and 7 ins. apart for 600's cards. Sagging between the rollers can be effectively prevented by constructing the frame so that the distance between the two parallel rails G, and also the length of the rollers which support the cards, is less than the length of the card. For ordinary 400's or 600's cards, about $16\frac{1}{4}$ ins. long, the rollers may be 12 ins. long, and the supporting rails G the same distance apart. Supports F may be readily modified in form to suit the alteration in the position of rails G. The angle between the cards and the face of the cylinder at A should be less rather than greater than that shown in the figure in order that the cards may not appear to rise above the level of the roller D. This rise, if too great, has a tendency to cause the card to slacken and fall between the cylinder and D. The parts F, G, and H of the frame can be readily adjusted to reduce the angle. The lower portion of the frame from J to C is part of a circle with a radius of about 16 ins. This would accommodate from 1500 to 2000 cards if wired in twenties—that is, hanging ten deep.

In the weaving of cross borders where the total length of the cloth or napkin is of reasonable extent, and where the jacquard employed is not a cross-border machine, it is usually considered more economical to provide a full set of cards for the entire length of the cloth, than to incur the loss of time and the wear and tear of the cards entailed by the constant changing that would be necessary were a single repeat only of the border and the centre patterns provided. Where the jacquard is of the Verdol fine pitch type as illustrated in Fig. 156, it is at all times considered most economical to provide a complete set of cards for the entire length of the cloth. In other cases, however, where the length of the cloth practically precludes the use of a

full set of ordinary cards, and where two sets are provided to work alternately, card frames are sometimes used, with which it is necessary to lift out one set of cards before the other set can be used. The time lost by this method, as well as the number of cards destroyed, is very considerable, and it is preferable to have a card frame of a type somewhat similar to that indicated in Fig. 158, where border and centre cards always occupy their respective sections or curves A and B, whether acting or at rest. Section A is preferred for the border cards, as they work backwards better from it than from section B. In the figure the path taken by the border cards is indicated by the dotted line C, while that taken by the centre cards is shown by the dot-and-dash line D. Rollers E and F, which travel with the cylinder G, serve to guide the border and centre cards to their respective sections while travelling in the normal direction, while the roller F guides the border cards when the latter are working backwards. This type of card frame is also extensively and satisfactorily used for the special cross-border machine illustrated in Fig. 155.

Pressure Harness and Twilling Jacquards.—No treatise dealing with the mechanism of linen weaving could be considered complete without treating on the above associated methods of producing extensive patterns in the finer classes of damask goods. Of the two systems, that of the pressure harness is the older, and although it is applied in power-loom work, it might be truly regarded as an apparatus belonging more particularly to hand-loom weaving and as an aged remnant of that fast-vanishing branch of the industry. In this system of weaving, the harness or jacquard machine is supplemented by a camb of five or eight leaves, according as the twill employed is the five or the eight end sateen. This combination of "camb" and "harness" in the hand-

loom has probably led to the adoption in certain districts

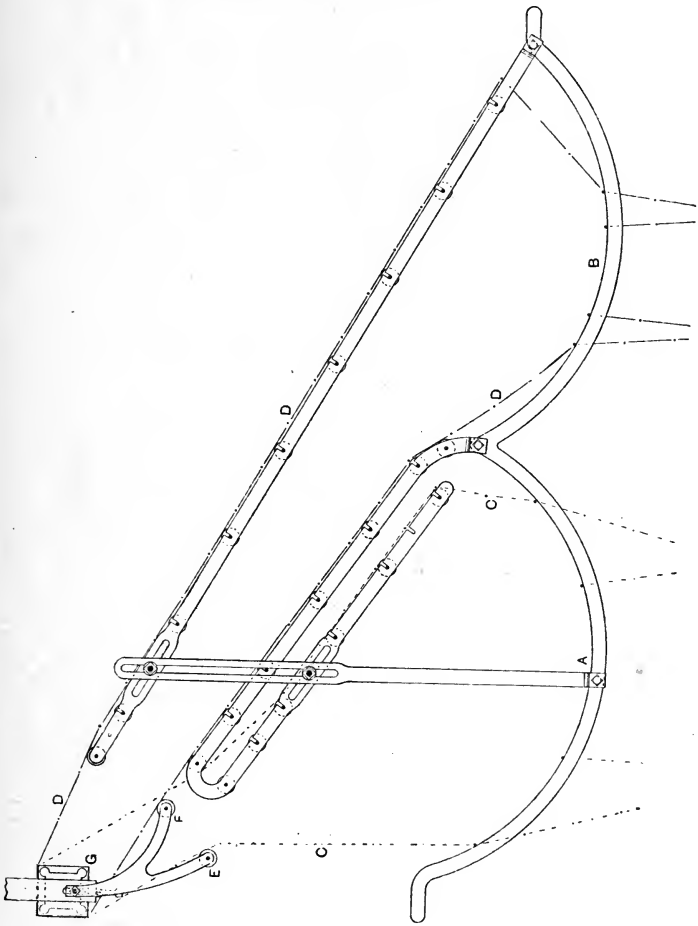

FIG. 158.

of the somewhat misleading term "common harness" as applied to both the above systems of weaving, in contra-

distinction to the term "full harness" generally applied to ordinary jacquard work. These terms have become so well established that we shall adopt them for further reference. With a pressure-harness loom it is, generally speaking, possible to increase the pattern in size to any predetermined extent without increasing the capacity of the jacquard or the number of cards in the design, and without decreasing the sett of the cloth. It is therefore evident that in this respect the system is a saver of cards and machines to a considerable extent. Take a simple case to show the saving of cards alone at its lowest estimate. Say a warp of 2400 ends is actuated by a 600's jacquard full harness with four repeats in the width; the pattern is square, and there are the same number of warp and weft threads per inch, thereby giving 600 cards in one repeat. It is desired to make the pattern double its present size, or only two repeats in the width. This with a full harness mounting, means 1200 hooks, or two 600's jacquards instead of one, and also 1200 cards in the repeat on each machine, or 2400 cards in all. With a pressure-harness mounting in which two threads are drawn in each mail and two picks given to each card, only one 600's machine, with 600 cards in a repeat of the design, would be required, or only one-quarter of that necessary with the full-harness system—a saving of 75 per cent. in cards alone. In practice this saving is often carried as far as making one card under the twilling jacquard system do duty where sixteen cards would be necessary with a full harness mounting—a saving of fifteen-sixteenths, or nearly 94 per cent. It has been stated elsewhere, however, that this saving is too often accomplished at the expense of the appearance of the cloth and of the pattern.

In pressure-harness weaving the warp threads A, Fig.

159, from the yarn beam, after passing over the lease rods B, are drawn through the mails C of the harness in 2's, or 3's, or 4's, or any predetermined order according to the extent to which it is desired to increase the capacity of the jacquard. The grouping of the threads in the mails of the harness may be all 2's, all 3's, or all 4's, or it may be

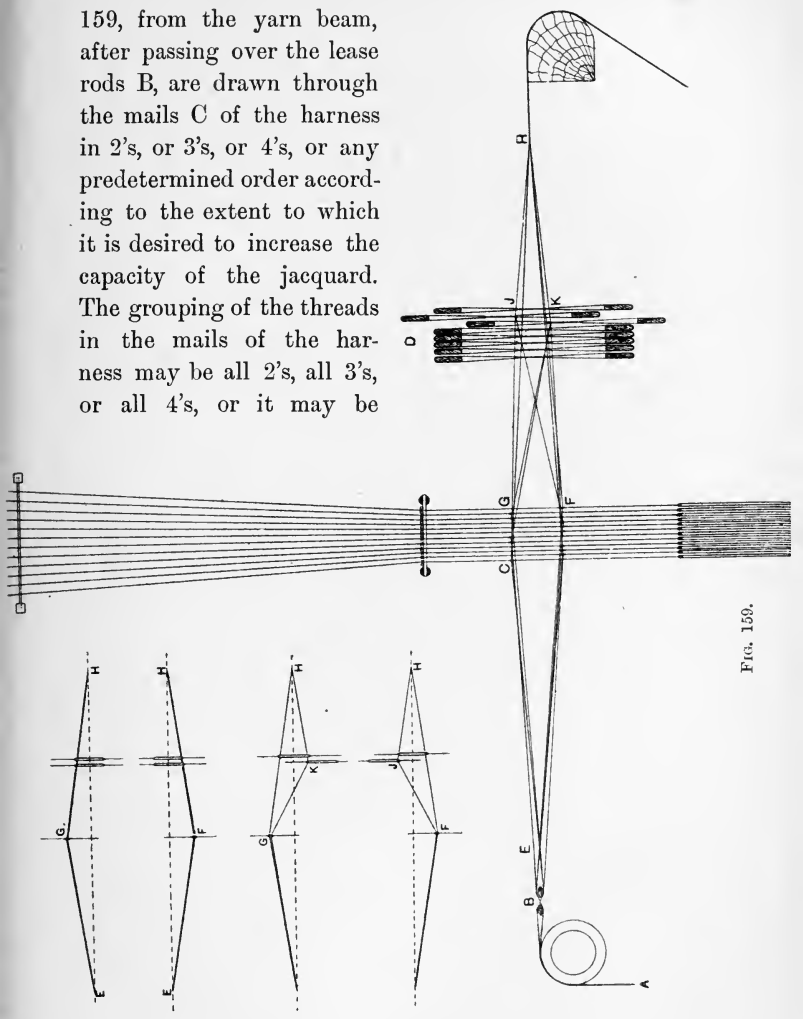

FIG. 159.

3, 2, 3, or 3, 3, 2, or 4, 3, 3, or any other arrangement,

which, to be most convenient, should repeat on twelve mails, or once across the harness. In cases where more than two threads are passed through each mail, it is preferable that the mails should be decked—that is, have two or more openings for the warp in order to prevent the latter from twisting. The warp threads are then drawn singly in the camb leaves D—*i.e.* the first thread on the left is drawn through leaf No. 1; the second through leaf No. 2, or beginning from the right the first thread is drawn through leaf No. 8 (or No. 5 if the 5-leaf twill is to be woven), the second through leaf No. 7, and so on, the draft being repeated in that manner as often as necessary, and each thread being drawn singly on its proper leaf irrespective of the order of drafting in the harness mails C. The heddle eyes on leaves D are usually from $2\frac{1}{4}$ to $2\frac{1}{2}$ ins. long. The warp threads are then reeded in the usual manner, in 2's or 3's, as the case may be. Fig. 160 shows graphically the draft order 4, 3, 3 drawn once over the harness and giving five repeats of the draft on eight leaves. The horizontal lines connecting each succeeding three threads indicate that the reeding is in 3's.

One of the benefits of this system of weaving is that only the figure requires to be painted on the design paper and cut on the cards, since the twilling is effected by the leaves D independently of the harness. The figure only being cut on the cards, it is evident that when the jacquard griffe is lifted, the warp will be left down or lifted by the harness in solid portions, depending upon the uncut and cut parts of the card which is presented to the needles of the machine. With the shed thus formed all threads assume one of two positions—viz. E F H or E G H, Fig. 159; but in order that the warp may be properly

bound with the weft at regular intervals, both in figure and ground, it is further necessary to depress under the weft one thread from every eight (or from every

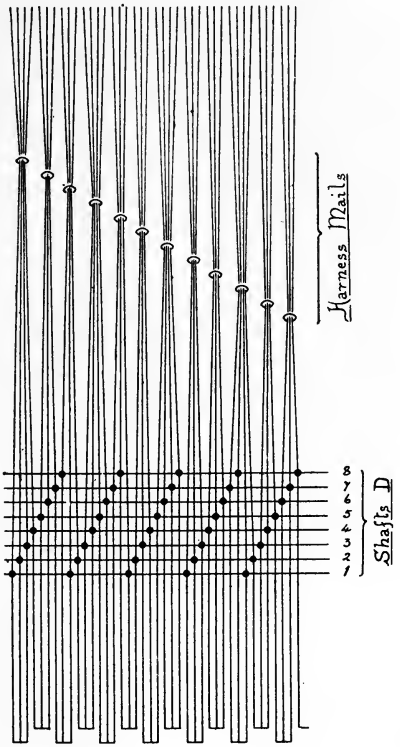

FIG. 160.

five) of those lifted by the harness, and to raise over the weft one thread from every eight (or from every five) of those left down by the harness. This is accomplished by depressing one, and at the same time raising one of the

eight leaves D. The warp threads may now occupy one of four positions—viz. :

E F H = left down by the harness and the leaves.
E G H = raised by the harness.
F J H = left down by the harness and raised by the leaves.
G K H = raised by the harness and depressed by the leaves.

With this shed formed a pick is inserted. For the following picks the harness griffe may be retained in the "up" position for theoretically any number of successive picks, while the camb leaves D alone are changed to form the cloth. As has already been stated, a considerable saving is effected when two picks are given without changing the card or harness, but in some cases it is not unusual to find even five and six picks given to one card.

From the foregoing it is evident that the leaves D may occupy one of three positions—a central one or that of inaction, and also one either at the top or the bottom of their travel. They are usually mounted about midway between the harness and the fell of the cloth—a common distance being 10 to 12 ins. from both,—and are trimmed in such a position that the warp from the harness mails almost touches the bottom of the heddle eyes when the leaves D are level in their central position. This arrangement permits of a full lift of the harness being imparted to the warp without any interference on the part of the leaves D while the latter remain in their middle position. But the movements of the leaves D in depressing one-eighth of the lifted warp and in lifting one-eighth of the warp from the low position put a considerable amount of extra strain upon the warp. To minimise this strain as much as possible

it is customary to have the yarn beam at least 25 ins. to 30 ins. behind the harness mails C, so that a good length of yarn may be in play. Notwithstanding this, however, the distance of the harness mails C from the reed, and the action of the leaves D on a portion of the yarn, together combine to reduce the size of the shed available for the shuttle to such an extent that the use of very shallow shuttles—$\frac{1}{2}''$ to $\frac{3}{4}''$ deep—is entailed, with a corresponding reduction of their capacity, and increase of labour in refilling them.

When this system of weaving is applied to the power-loom the griffe or brander of the jacquard is most simply actuated by a connecting rod from an ordinary treadle or lever fulcrumed at the side of the loom and acted upon by a negative tappet or cam fixed on a short supplementary shaft, which is driven by suitable gearing from the crank or the wyper shaft. This forms one of the defects of the system, as it is not so easy to arrange an irregular number of picks to the card in this manner as in that adopted in the twilling jacquard. Tappets can, of course, be constructed and driven by suitable gearing to give any order of lifting—*i.e.* to retain the griffe in its highest position for any number of successive picks,—and Fig. 161 shows a tappet constructed to keep the griffe up for three successive picks.

We would refer the reader to pp. 122 and 123 for a discussion of the chief points requiring consideration in the construction of negative wypers in general; but we should like here to direct particular attention to those points which influence the outline of the machine lifts of the type under present notice. They are almost invariably found actuating single-lift jacquards, and since with these machines it is practically impossible to get "cover" on the cloth, the question of dwell resolves itself entirely into one of sufficient

time to enable the shuttle to pass comfortably through the shed while retaining a maximum of time in which the

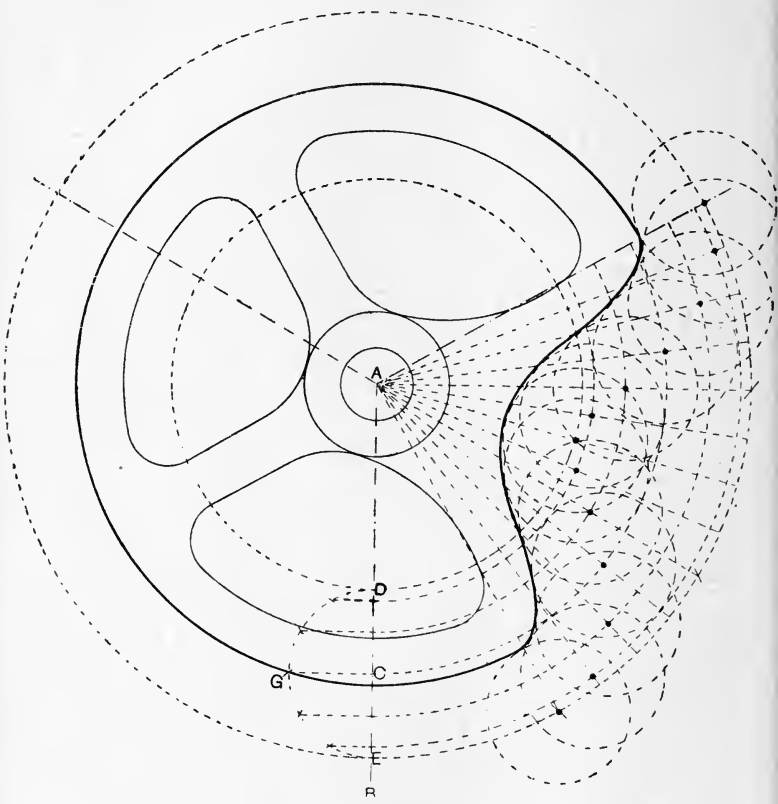

FIG. 161.

change of shed may be accomplished. Whilst a liberal estimate of the time which the shuttle takes to pass across the race may be taken at 120° or one-third of the crank's

revolution, in many cases 90° to 100° would be more correct. Now it has already been shown (p. 125) that in open-shed looms where the tappets are constructed to give "cover" to the cloth, only approximately 50° of the dwell in narrow looms to 100° in very wide looms is available for the passage of the shuttle before the leaves begin to close. This being so, and since in constructing the wyper its outline is so formed that it imparts little movement to the treadle for some time previous to entering on and to leaving the dwell —in effect practically increasing it,—we consider that 90°, or one-quarter of the crank's revolution, is ample time to allow for the passage of the shuttle. Besides this point, it is sometimes urged that time must be allowed for the hooks changing when the griffe is in its lowest position. With regard to this we would again point out that the construction of the wyper is such that when the griffe is nearing its lowest position it will travel slowly, and after reaching the bottom position will begin again to rise slowly; that the griffe blades have cleared the hooks some little time before the extreme low position is reached; and, moreover, since the card cylinder is usually actuated by what is known as the "swan-neck" motion, the cylinder will be close to the needle board, and therefore the hooks will have actually changed before the griffe has reached its lowest position. Such being the case, it is unnecessary to allow any dwell or time purely for this purpose.

Data for the construction of machine wyper:—Distance from the centre of supplementary shaft to centre of anti-friction roller in lever when the latter is level, say 6 ins. Dwell for passage of shuttle, say 90° or $\frac{1}{4}$ of a pick. Throw of wyper = travel of lever at the centre of anti-friction roller, $3\frac{1}{2}$ ins. Diameter of anti-friction roller, 3 ins.

Construction: On the line A B set off A C = 6 ins.; also

set off C D and C E $= \frac{3\frac{1}{2}}{2} = 1\frac{3}{4}$ ins. With A as centre, and A D, A E as radii, describe circles. Divide these into three equal portions, each of which represents one revolution of the crank-shaft, or one pick. Subdivide any one of these into four equal portions. One of the latter may now be set aside for the dwell and the other three for the changing of the griffe. Again, subdivide the remaining three-quarters of a pick into twelve equal portions of time—six to be taken for lowering and six for raising the griffe. With C as centre and C D as radius, describe the semicircle D G E Divide this into six equal portions, and from these points drop perpendiculars to D E. With A as centre and the points thus obtained on D E in succession as radii, describe concentric arcs to cross the part set aside for change. With the points of intersection thus obtained in succession as centres and the radius of the anti-friction roller, describe circles indicating the roller at these points. Complete the wyper by drawing its outline for the change tangential to these circles, and for the dwell draw the remainder as part of a circle.

In pressure-harness looms the leaves for weaving the twill may be actuated by :—1st. A special arrangement of hooks from the jacquard. In this case the jacquard griffe would require to rise and fall every shot—a decided disadvantage. 2nd. A small dobby for the purpose. 3rd. A positive box tappet of the Woodcroft type, situated outside the loom proper, the treadles being connected to the leaves in a manner similar to that indicated in Figs. 76 and 77. The last is perhaps the best and most generally preferred method.

In hand-loom weaving the leaves are usually actuated by five or eight treadles, which the weaver controls with his

right foot, the left being engaged for working the treadle which is connected to the jacquard. The latter treadle is shown at A, Fig. 162, and the former treadles (in this case for five leaves) are indicated at B. They are fulcrumed on a pin C at the front of the loom, just under the weaver's seat, and extend under the camb leaves D, three of which —Nos. 1, 2, and 3—are shown. No. 1 is in the centre position, while No. 2 has been raised and No. 3 depressed. All leaves assume the centre position immediately they are released from the pressure of the foot by means of the following connections. The top shaft of each leaf of the camb is connected overhead to the outer end of the short wooden levers E, these being in turn connected by short cords to the levers F, the outer arms of which support counterbalance weights G, which raise the leaf to which they are connected as far as the stop bars H will permit. The leaves are raised and depressed as follows:—Each treadle B is connected to two leaves through the lames or counter-marches J, and acts so as to lift one leaf and sink the other. Treadle No. 1 is attached to the underside of leaf No. 3, while a further connection is taken up through the warp (in the figure this is shown attached to the top of leaf No. 3) to the inner arms of a pair of levers E, the outer arms of the same pair being connected to the upper side of leaf No. 2. When this treadle is depressed by the foot, leaf No. 3 is also depressed, while at the same time leaf No. 2 is raised. This is indicated in the small weaving plan K to the right of the treadles, where a circle indicates a leaf sunk and a cross one lifted. In a similar manner—

Treadle	No.	2	sinks	leaf	No.	1	and raises	No. 5.
,,	,,	3	,,	,,	4	,,	,,	3.
,,	,,	4	,,	,,	2	,,	,,	1.
,,	,,	5	,,	,,	5	,,	,,	4.

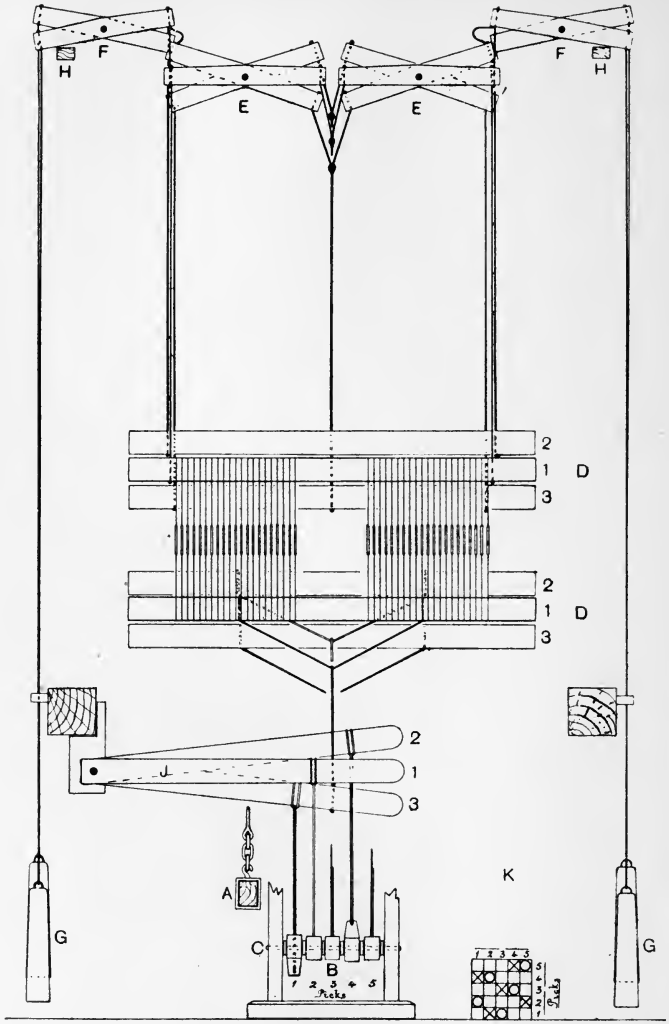

FIG. 162.

Twilling Jacquard.—This machine may be said to do for the power-loom what the pressure-harness system does in hand-loom weaving. The main difference between the two systems is that in the latter an ordinary jacquard is used, the pattern being increased or extended by drawing two or more threads of the warp through each mail of the harness, and then drawing them separately through the leaves in front of the harness in order that the binding or twill of the weave may be properly formed, whereas with the former system a special jacquard is used, in which each needle of the machine controls two or more hooks (instead of one mail taking two or more threads), and the yarn is drawn singly through the harness mails. This machine performs the twilling operation automatically without the aid of leaves, and forms a shed of the bottom-closed type, as in an ordinary single-lift jacquard. Its action on the warp yarn is less severe than the pressure-harness system; while ordinary shuttles and pirns can be used, and production therefore kept up. When compared with the pressure harness, the most obvious and probably the only serious disadvantage of the twilling jacquard is the fact that the griffe or brander of the machine requires to rise and fall every pick in order that the twill may be effected. This causes the card cylinder to move out and in, and thus strike the needles every shot, although no change of card may have been made. Cards, therefore, last a shorter time than on the pressure-harness system. A further objection that is sometimes urged against the twilling jacquard is that it does not make so firm a cloth as the pressure harness; but the advocates of this objection usually say in the same breath that the pressure harness is harder on the warp, and better yarn must therefore be used. Now better yarn invariably results in the production of a superior

piece of cloth, so that the above is an unfair comparison. Provided the yarns are the same, we have no hesitation in saying that the twilling jacquard will turn out as substantial and as satisfactory a piece of damask as will the pressure harness; indeed, in some cases better results will be obtained, since the machine has not the same tendency to strain the yarn beyond its elastic limit.

It is true that the pressure harness offers better facilities for extensive enlargements of pattern, for each harness mail may take any practicable number of threads, and the pattern may thus be increased in any desired proportion. On the other hand, the twilling machines are generally made in certain well-defined sizes or arrangements, and the increase of the pattern is to some extent limited.

The needle board A (Fig. 163) of a twilling jacquard is identical with that of an ordinary 600's machine, and therefore contains 12 horizontal rows of 51 needles each, or 51 vertical rows of 12 needles each. In the ordinary machine each needle controls one hook; consequently there are 12 hooks in one row of the jacquard from the needle board to the spring-box. In the twilling jacquard, however, each vertical row of 12 needles usually controls 24, 25, 32, 40, or 48 hooks in one row from front to back, or from the needle board to the spring box. The capacity of the twilling jacquard may therefore be stated as $\frac{24}{12}, \frac{25}{12}, \frac{32}{12}, \frac{40}{12}$, or $\frac{48}{12}$ of the ordinary full-harness machine. The number of hooks in one complete row of a twilling machine must be a multiple of the ends in a repeat of the binding weave to be employed, and since this is almost invariably either the 5-end or the 8-end sateen, we find that the number of hooks in one row is a multiple of either 5 or of 8, or of both. It is the general custom to make the

25-row machine answer also for the 24-row, by arranging

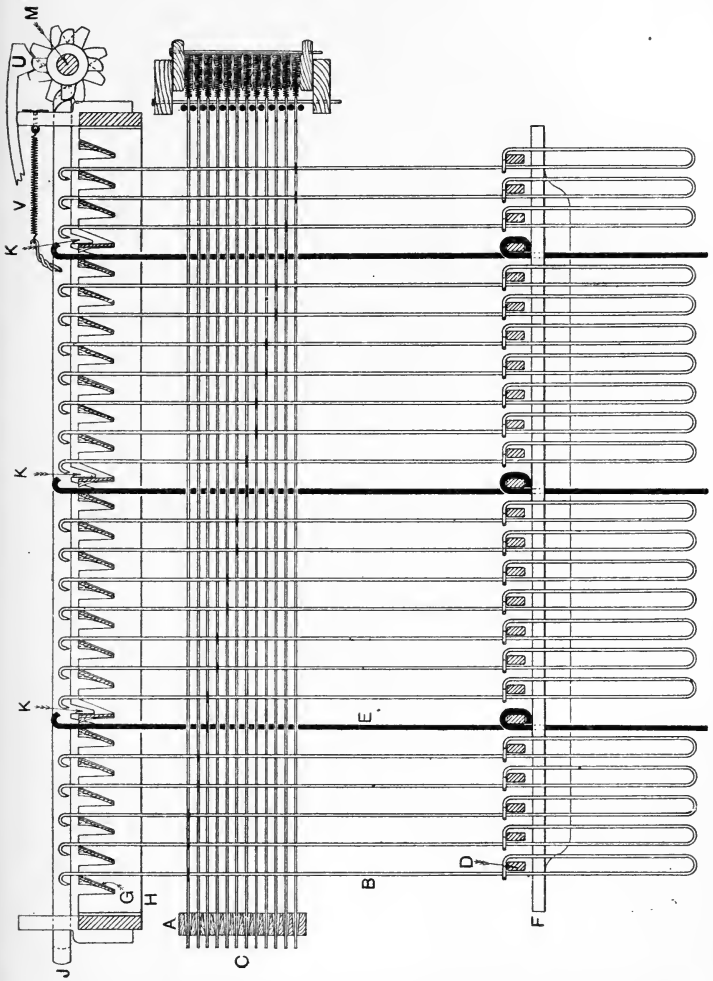

Fig. 163.

it so that if the 5-end twill is required, the whole 25 hooks

are utilised (1 needle with 3 hooks, and 11 needles with 2 hooks each—see Fig. 163), whereas if the 8-end twill forms the binding, then only 24 hooks—two to each needle —are in use, the first row being left idle. In the 32-row machine 8 needles govern 3 hooks each, and 4 needles govern 2 hooks each, arranged 3, 3, 2, for 4 times, while in the 48-row machine each needle controls 4 hooks. The two latter machines are suitable for the 8-end twill only, but the 40-row machine is suitable for either the 5-end or the 8-end twill; here 4 needles control 4 hooks each, and 8 needles control 3 hooks each, arranged 4, 3, 3, for 4 times. The 32-row machine is sometimes filled 3, 2, 3 for four times instead of 3, 3, 2, so that it may be readily changed to a 30-row machine for the 5-thread twill by leaving idle the first and the last of each row. It is, of course, necessary when changing from the 8-thread twill to the 5-thread twill, or *vice versa*, to make a corresponding change in those parts of the machine which automatically control the self-twilling apparatus.

The hooks B, 17½ ins. long, are similar to those generally used in the Scotch jacquards, while the needles C have 2, 3, or 4 cranks in them, according as they are intended to control 2, 3, or 4 hooks respectively. The hook rest D is an iron bar, oblong in section, which passes right through one long row of hooks, and is itself supported at each end by a special strong hook E, the head of which is turned towards the spring-box—*i.e.* in the opposite direction from that of the ordinary hooks. These heavy hooks E are supported in their lowest position, and guided in their vertical movement by a special guide-plate at F, through which the lower end of the hook passes, and on which the bent portion rests when the hook is in its lowest position. Another plate, not shown in the figure, is situated about

level with the top needle, and assists in keeping the hooks E vertical. This arrangement permits of a full row of 51 hooks being raised at will without the intervention of the card on the cylinder. All the griffe or brander blades G in this machine rest loosely in semi-V-shaped cuts in the supporting bars H of the griffe frame, and are capable of being rocked into one of two positions—inclined or vertical —by means of special twilling needles or bars J, which pass across the top of the blades or knives G at the extreme end of the latter (see Fig. 164), and control them by means of two fingers K projecting from the underside. Five bars J are necessary for the 5-end twill, and 8 bars for the 8-end twill. When the former weave is used, the bars J are usually all situated at one end of the griffe blades G, but when 8 bars are used, 4 may be placed at each end of the griffe blades. Each bar J controls 1 griffe blade G in each repeat of 5 or 8, as the case may be, while one bar must always control an extra blade, since the first and the last fulfil the purpose of only one blade.

In a 40-row machine arranged for the 5-end twill we might have :—

1st bar controlling griffe blades			3, 8, 13, 18, 23, 28, 33, 38.
2nd	„	„	1, 6, 11, 16, 21, 26, 31, 36, 41.
3rd	„	„	4, 9, 14, 19, 24, 29, 34, 39.
4th	„	„	2, 7, 12, 17, 22, 27, 32, 37.
5th	„	„	5, 10, 15, 20, 25, 30, 35, 40.

In Fig 164, which is a plan of the 25-row machine shown in section in Fig. 163, the first row is idle, and the other 24 rows are arranged for the 8-end twill. Here there are 8 twilling bars J, 4 at each end of the griffe blades G, those blades which the bars J control being indicated by a cross on the respective bar. If we neglect

the first blade altogether, we find that counting from the bottom of the figure :—

Bar No.	1	controls blades	3, 11, 19.
„	5 (next to act)	„	6, 14, 22.
„	2	„	1, 9, 17, 25.
„	6	„	4, 12, 20.
„	3	„	7, 15, 23.
„	7	„	2, 10, 18.
„	4	„	5, 13, 21.
„	8	„	8, 16, 24.

In both the figures bar No. 5 is represented in action, having rocked its respective blades 6, 14, and 22 from the inclined to the upright position. When the griffe rises with the blades in this position, all the hooks on the 6th, 14th, and 22nd rows will be left down, no matter whether pushed back or not by the action of the card on the needles C ; but at the same time a bent portion L near the end of each blade lifts the heavy hooks E at the ends of the rows immediately in front—*i.e.* the 5th, 13th, and 21st,—thereby raising all hooks in these rows, whether left on by the card or not. In this manner every 8th thread is raised from the groups that were to have been left down by the action of the card, and every 8th thread is left down from the groups that were to have been lifted. It is, of course, understood that with this machine, as with the pressure harness, the pattern only is painted on the design paper and cut on the cards. Of the few hooks indicated in Fig. 164 it will be noticed that the first twelve (No. 1 being idle) are in the "on" position, and that all would have been lifted had the blades G been fixtures as in the ordinary machine ; but since blade No. 6 has been rocked into the vertical position, that hook will be left down to form the binding with the weft. At some other points in the design,

as at hooks 12 to 19 inclusive, a number may be in the "off" position. Here again, however, the rocking of the

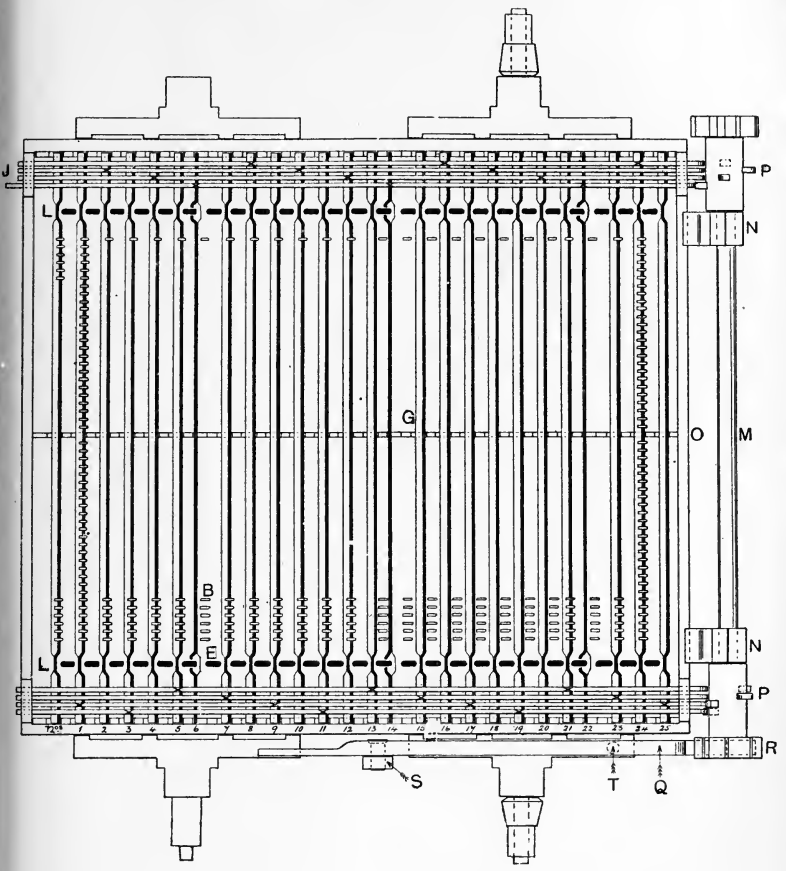

FIG. 164.

blade No. 14 will cause hook No. 13 to be raised above the weft to form the twill or binding. Similarly, throughout

the machine or the warp one thread out of every eight forming the ground will be lifted above the weft, and one out of every eight forming the figure will be left down. The blades G are changed every pick in the following manner:—At the back of the machine, just above the spring-box, a twilling shaft M (see also Figs. 163, 164, and 165) is supported in brackets N set-screwed on the griffe frame O. The diameter of shaft M is enlarged near each end, and round the periphery of each of these portions are fixed four small tappets P, one for each bar J. As the griffe descends, this shaft M is rotated one-eighth of a revolution by means of a pushing pawl Q which acts on the underside of the 8-toothed ratchet wheel R keyed on the end of the shaft. The pawl Q moves backwards and forwards as the griffe rises and falls by means of the stud S projecting from the end of the pawl into a fixed swan-neck bolted to the inside of the framework of the machine. A spring hammer T, enclosed in the framework immediately underneath pawl Q, keeps the latter in close contact with the ratchet R. At the other end of the shaft M another spring hammer U (see Fig. 163) prevents undue rotation of the shaft. The twilling bars J and the blades G are returned to their normal position by the spiral spring V fixed to the bar as shown in the same figure.

An improved and simpler method of rotating the twilling shaft M is illustrated in Fig. 165. A bracket 18 is bolted to the framework, and near the end of this bracket is secured an upright stud 19. A pawl 20 is centred loosely at 21 in stud 19, but is kept from dropping, and its height is regulated, by set-screw 22 fixed to bracket 18 as shown. When the twilling shaft M rises with the griffe O, the end of pawl 20 is lifted sufficiently high by ratchet wheel R to allow the latter to pass, but the pawl

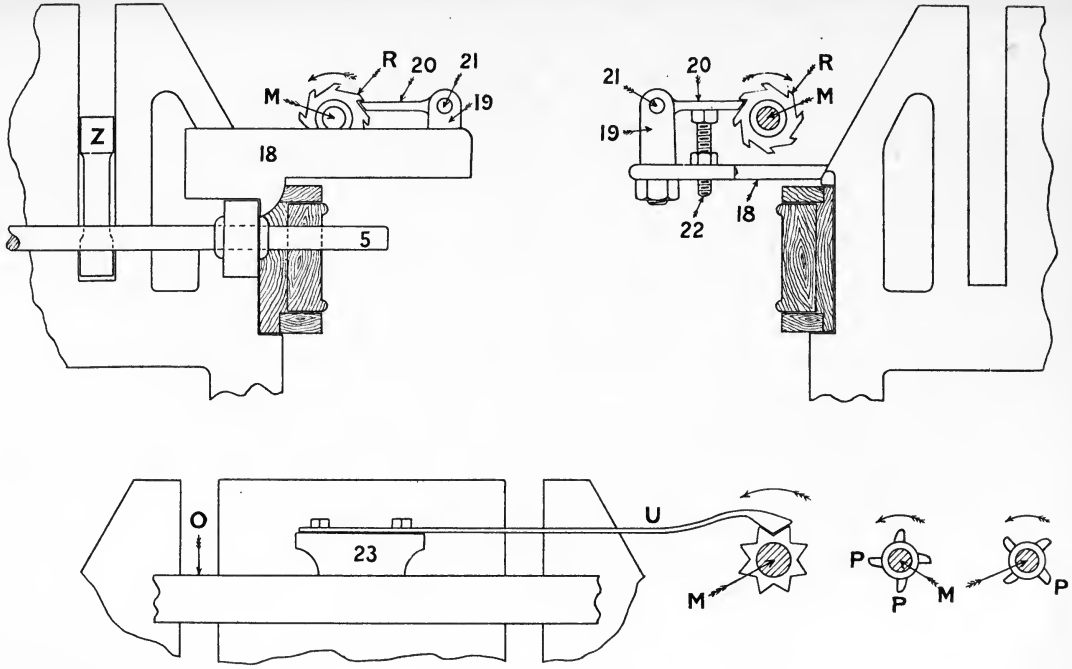

FIG. 165.

drops to its present horizontal position immediately it is released by the ratchet. As the griffe descends, one or other of the teeth of rachet R comes in contact with the upper edge of pawl 20, and, consequently, the twilling shaft M is rotated, in the direction indicated by the arrows, one-eighth of a revolution for the 8-thread weave. The upper left-hand figure is a view taken from the end of the jacquard, while the upper right-hand figure is from the inside of the machine. The small tappets P for the 8-thread weave are shown in the two small detached figures, while the spring hammer U is set-screwed as shown to a small bracket 23, which is in turn set-screwed to the griffe frame O.

Fig. 166 is a side elevation of the machine with the outside framing removed, and besides showing the majority of the parts already mentioned, gives an idea of the method usually adopted for actuating these machines. The shaft W, seldom under 2 ins. in diameter, is generally supported in suitable brackets in the framework (see Fig. 167), and is actuated in the usual manner by means of a simple lever, connecting rod, and crank from the crankshaft. Set-screwed on the shaft W are two arms X, one at each side of the machine, carrying anti-friction rollers at their ends, on which the bottom portion of the lifting block Y rests. Vertical movement is ensured by means of two portions Z of the lifting block working in suitable guiding slots in the frame proper. The machine, of course, descends by means of its own weight and that of the harness attached. In many cases this weight is so excessive that it becomes imperative to arrange some counterpoise to aid the loom in lifting the machine, and to prevent the machine from driving the loom when the former is falling. This generally takes the form of a dead weight, sufficiently

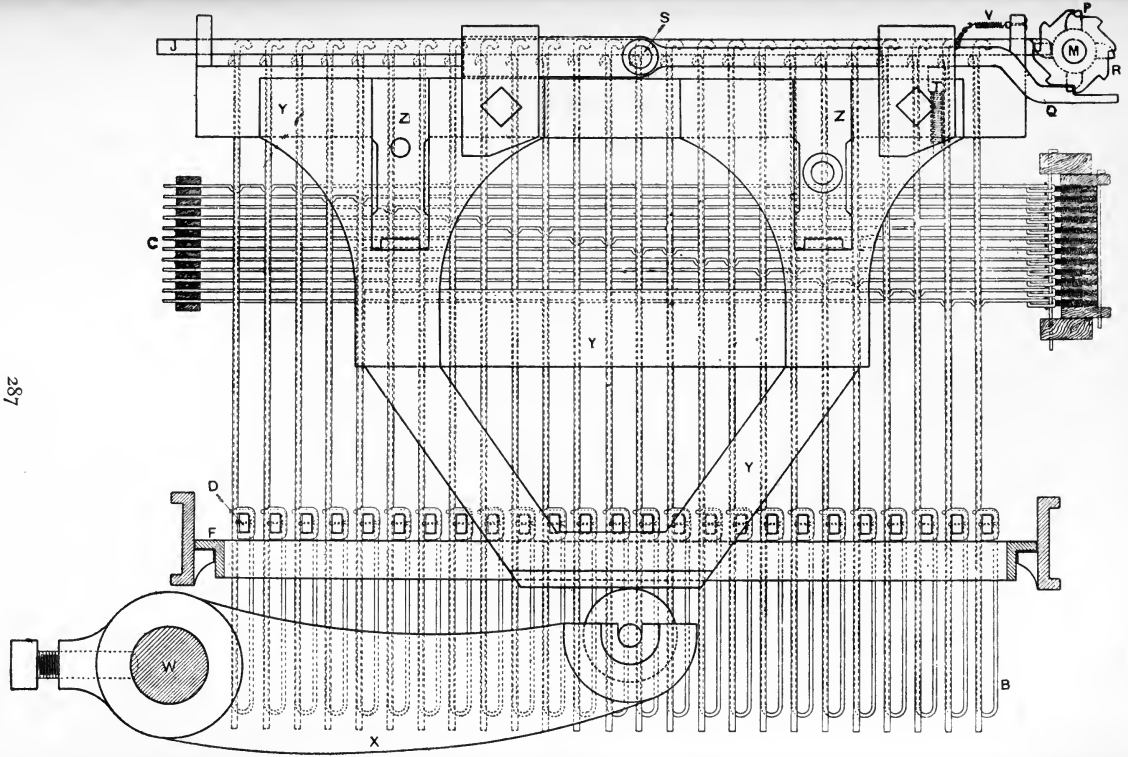

FIG. 166.

heavy for the purpose, which is attached by a connecting rod to a second lever keyed on shaft W. In most cases the connecting rod for the counterpoise extends practically to the floor of the weaving shed, and supports the counterpoise weights directly, but in other cases the rod is attached by a pin to the free end of a long lever which is fulcrumed either at the back or at the front of the loom; this long lever is situated near the floor, and the counterpoise weights may be slid along it to increase or decrease its effect upon the jacquard griffe. Besides weights, which are probably to be preferred on account of the constant nature of their action, heavy spiral springs are often attached, or fixed in such a manner that they are compressed when the griffe is falling, while they again extend and give out their force as the griffe rises. The whole question of effectively driving and counterpoising these heavy machines is a troublesome one, and it is doubtful if an ideal method has yet been evolved. Many firms have adopted the top-lifting principle illustrated in Fig. 136 with considerable success; others have introduced compound systems of levers; while others again have arranged to push up the griffe from two points, ZZ, Fig. 166, instead of from one. Fairly satisfactory results have attended each method.

For 3-machine and 4-machine lifts it is a common practice to have driving cranks and connecting rods at each end of the loom to correct the torsion in the machine shaft W.

Top lifts require long connecting rods, and their tendency to vibrate has to be counteracted in some simple and effective way. Top lifts also make it difficult to remove the griffe of the machine when this becomes necessary for repairs, or for the replacement of bent and

worn-out hooks and needles. Compounded levers, on the other hand, multiply the number of working parts, and these are usually accompanied by backlash and a jerkiness of movement which is undesirable, and which is usually absent from a top lift. Circumstances very often determine which general method shall be adopted, as, for example, the lack of sufficient height in the shed, which naturally makes it impossible to adopt the top lift. In all cases the connections should be such as will enable the weaver to place the lay of the loom in any desired position with comparative ease.

Fig. 167 shows the outside framing of the machine, and indicates chiefly the mechanism for controlling the number of successive picks for each card. The cylinder 2 is moved out and in every pick in the usual manner by means of the stud 3 projecting from the lifting block, and working in the ordinary swan-neck 4, which is set-screwed on the slide rods 5. The double catch 6, fulcrumed at 7, is, however, controlled in such a manner that it can be made to take or miss the cylinder head at will. Projecting from the side of the catch 6 is a stud 8 which rests by gravitation on the periphery of a cut disc 9. This disc is compounded with a ratchet wheel 10, which is rotated one tooth each pick by the pawl 11, lever 12, and rod 13 attached to the stud 14 in the lifting block. The flat spring 15 keeps the pawl 11 in touch with the ratchet 10, and the spring 16 prevents rotation in the opposite direction. Were disc 9 a complete circle, the stud 8 in the catch 6 would be so supported that the latter would never take the cylinder head, and the same card would be presented always; but at certain points in the circumference of the disc 9, notches are cut which allow the stud 8 and catch 6 to fall, and so rotate the cylinder as the latter

recedes. A further arm of the catch supports a stud 17

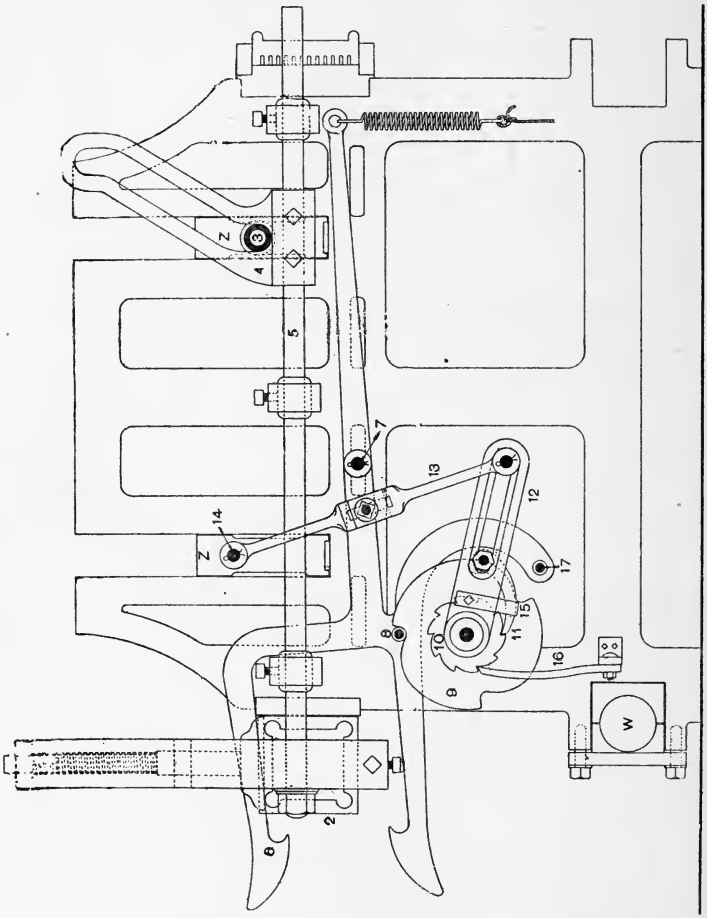

Fig. 167

at the underside of the disc to serve the same purpose as stud 8 when the cards are working backwards. If the

ratchet wheel contained, say, twelve teeth, and the disc 9 only one notch or recess corresponding with one of these teeth, then it is evident that the catch 6 would operate on the card cylinder only once in twelve picks, and each card would be presented to the needles for twelve picks in succession. The ratchets and discs can be cut to suit any order of changing; but where, say, two picks to a card are wanted in regular succession, the ratchet would probably have twelve teeth, and the disc 9 would be arranged cut one, miss one, six times over—that is, twelve equi-distant points would be taken on the circumference of the disc, and at alternate points recesses would be cut for the reception of the studs 8 or 17. If four picks to the card were wanted, the same ratchet could be used with a new disc cut three times in the circumference at points 120 degrees apart. The order 3, 3, 2 could be obtained with a ratchet of eight teeth, but one of sixteen teeth would probably be used, and the order cut twice in the revolution of the disc. All three picks to the card would be obtained by a ratchet of twelve teeth, and a disc cut at points 90 degrees apart. Ratchets scarcely ever exceed twenty to the round, although some of greater capacity are found in use; that indicated in the figure has ten picks to the round—4, 3, 3.

To calculate the order of the disc required for any cloth, or, in other words, the picks to the card, it is necessary to know (1) the proportion of warp to weft in the finished cloth; (2) the ruling of the design paper used; and (3) the capacity of the machine—*i.e.* the average number of hooks controlled by one row of needles, as 24, 32, 40, or 48, or any intermediate number.

For example, suppose a cloth in the finished state were to contain 80 by 120 per inch; the design paper to be 12

by 12; and the machine to contain 32 hooks per row—*i.e.* 12 needles control 32 hooks.

In one square of the design paper twelve vertical divisions indicate twelve needles of the jacquard, and therefore 32 warp threads, since twelve needles control that number of hooks. But in the same space on the design paper there are twelve horizontal divisions, and therefore only twelve cards will be cut. Now the proportion of warp to weft is as 80: 120, and for every 32 warp threads we shall have a proportionately greater number of weft threads in the same space:

$$\therefore 80 : 120 = 32 : x.$$

Whence $x = 48$ picks.

But to these 48 weft threads or picks there are only twelve cards given:—

$$\therefore \frac{48}{12} = 4 \text{ picks to the card.}$$

One other example will suffice: A cloth is to be finished 95 by 135 per inch; the design paper is 12 by 15, and the machine has 40 hooks to the twelve needles:—

One square of design paper = 40 warp threads.

One square of same design paper $= 40 \times \frac{135}{95} = 57$ nearly, weft.

But there are 15 divisions weft way:—

$\therefore \frac{57 \text{ picks}}{15 \text{ cards}} = 3\frac{4}{5}$ picks per card $= \frac{19}{5}$, or 19 picks on 5 cards. This would require a ratchet with 19 teeth and a disc cut to give 4, 4, 4, 4, 3.

To utilise the same set of cards for a finer or a coarser cloth in the way of the weft—that is, with a greater or a less number of picks per inch,—it is only necessary to

increase or reduce the number of picks per card in the corresponding proportion. If a cloth is working with three picks to the card to be finished 80 by 80, and it is desired to work a cloth 80 by 120 with the same cards, it would be necessary to give :—

$3 \times \frac{120}{80} = 4\frac{1}{2}$ picks to the card, or 9 picks on two cards, *i.e.* a 5 and a 4.

It is not, however, so simple a matter to alter the sett of the cloth in the way of the width and to use the same cards. If the sett be increased, it becomes necessary to use a machine of greater capacity; but if it be decreased in fineness, it is possible to use the same cards and machine by "fileying" the latter down—*i.e.* casting out hooks not required at regular intervals to the necessary extent. To do this it is evident that the machine must be refilled, since not only must every needle be employed to ensure the pattern being complete, but hooks must be left out in fives or eights, as the case may be, in order to keep the twill even or continuous.

For example, a 24-row machine may be reduced to a 20-row machine, even although working on an 8-end twill, by taking four hooks off the end of one row, and four off the beginning of the next row, or eight altogether. This is reducing the sett by one-sixth. The machine would now require to be refilled with 20 hooks to 12 needles, or 2, 2, 1, for 4 times. This, of course, entails new needles in many cases, and a machine refilled in this fashion, although containing 20 hooks to the row, is not suitable for the 5-end twill, since the hooks are not all omitted at one end of the row.

Further examples of this fileying, or reducing, process

are as follows :—A 25-row machine working the 5-end twill may be reduced to a 22½-row machine by removing 3 hooks from the end of one row, and 2 hooks from the beginning of the next. The machine would then be refilled as follows :—

All odd rows—5 needles with 2 hooks each 1 needle „ 1 hook	}	twice over.
All even rows—11 needles „ 2 hooks each 1 needle „ 1 hook	}	once.

Again, a 32-row machine may be reduced to a 28-row by taking 4 hooks from the end of one row, and 4 hooks from the beginning of the next. The order of refilling would then be 3, 2, 2, for 4 times. Under this system it is possible to reduce the capacity of a twilling jacquard to any extent or degree intermediate between its full capacity and a full-harness or 12-row machine; the latter point being occasionally reached in practice.

By the same procedure,—viz. by altering the picks per card and the capacity of the machine—the dimensions of the cloth and the pattern may be varied to a considerable degree both in length and in width without any variation being made in the sett of the fabric, and without in any appreciable measure affecting the original proportions of the fabric, or the design.

One general defect inseparably connected with pressure harness and twilling jacquard weaving, and to which reference has already been made, is the somewhat ragged and broken appearance which appears on the outline of the figure upon the cloth. This is due to the fact that one needle controls two or more adjacent threads according to the number of hooks per needle or to the threads per mail; also to the fact that two or more picks are given to each card. The result of this is, that although the pattern

changes by steps of one on the design paper, the same step on the cloth is represented by two, three, four, or even more threads and picks. In very fine damasks this fault is not so prominent, but as the cloth decreases in fineness, and as the number of threads per mail or hooks per needle is increased, the defect becomes more pronounced.

A further objection to cloths woven on this principle, and one which has hitherto been an eyesore to the trained observer, is the fact that where straight vertical or horizontal lines of any considerable extent occur in the pattern, only one of the edges of the line "cuts" or binds properly with the adjacent ground weave. Where the stripe is continuous throughout the piece, it is possible to bind the faulty edge by making a wrong draft in the harness; but this solution of the difficulty is available only in such cases. When the ground and figure weaves twill in opposite directions, as in full harness, the perfect cutting is easily effected, as will be seen by Fig. 168, which shows 8 threads and 8 picks of figure surrounded by the ground weave; but the method adopted for twilling in both the pressure harness and the twilling jacquards causes the twill in both ground and figure to run in the same direction; hence the stitching points of the ground and of the figure twills do not "cut" at both sides of the figure. This matters little in curved lines, as the change of angle in these generally creates sufficient binding of itself, but in straight lines either along or across the piece it is always possible for the thread at one edge of the line to work away from its proper position in the cloth, thus giving the idea of a fault in the weaving. In rectangular figures three of the sides are imperfect, as will be seen by referring to Fig. 169. Here the only binding point is that made by the 8th and 9th threads on the 11th pick, the other three

sides allowing the figure to work loose to an undesirable extent.

Since the above objectionable feature is generally corrected in full-harness designs by cross twilling, as in Fig. 168, it would appear that the simplest way out of the difficulty would be to construct the jacquard to twill the ground and figure accordingly. Cross twilling by mechanical means was introduced, but when the twills are produced mechanically, the principles of binding impose so many limitations on the designing of the pattern, and

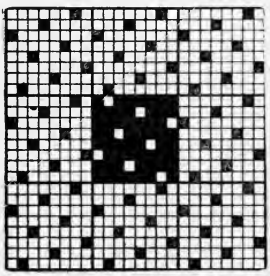

FIG. 168.

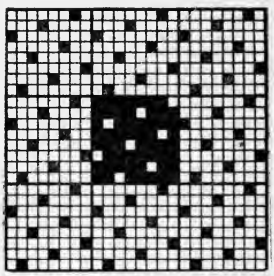

FIG. 169.

upon the working of the jacquard, that the method was found to be well-nigh impracticable. For example, if the jacquard were working the 8-thread twill it would be necessary to give every card either two or four picks, since every change from ground to figure must be made in multiples of four picks in order to bind properly. If the arrangement were for 3 picks per card, a change from ground to figure would require to be made in multiples of 12 picks. When weaving three picks to the card with the 5-thread twill, no change could be made under 15 picks, while with four picks to the card the minimum number is 20.

Changes in the warp with the 8-thread twill require to be made in multiples of four. On a 24-row machine this could be obtained by painting the design in multiples of two, but with a 32-row machine it would be necessary to paint in multiples of three, as the first two needles take six hooks, and the third needle two hooks, or eight hooks in all; the pattern would therefore require to step in 8's. With a 40-row machine, which is arranged 4, 3, 3 repeated, it would be possible to obtain a four by the first needle alone, but the next multiple of four would not be obtained until 16 hooks or threads were taken. With the 5-thread twill, greater difficulties are encountered in the painting of the design and in the arranging of the machine to work the cross twilling, since at every fifth shot it becomes necessary to lift and to leave down hooks of the same row.

Other efforts have been directed towards obtaining the binding effect automatically without cross twilling, and without limiting the design, but so far the method is applicable to warp threads or to vertical lines only. Its application complicates an already complex machine, and so far it has been adopted only in a few cases. Self-twilling jacquards are also made by which the ground twill of the cloth may have shorter floats than those in the twill used for the figure. In full-harness work it is not unusual in certain medium qualities to develop the figure pattern in 8-thread twill, while the ground weave is the 5-thread twill, and the above-mentioned machines reproduce this effect automatically. They are subject to the same general defects as the ordinary self-twilling jacquards, with the additional objection that rectilinear figures are not bound anywhere with regularity, and that the principle is restricted in its

application to complete machines. Nevertheless it is an ingenious machine, and on the whole does the work as satisfactorily as can be expected when the difficulties to be encountered are considered. The chief feature of the jacquard is the provision of two griffes in different planes which rise and fall together. Each upright wire is provided with two hooks at different levels to correspond with the two griffes. The top griffe lifts all pattern hooks in the ordinary way, and the griffe blades are controlled as usual to leave down every eighth hook to form the pattern twill, while the effective part of the second or lower griffe is not continuous but in sections, and so arranged that it can move longitudinally to take up the hooks in the 5-thread sateen order.

Where jacquards are more or less extensively used as the shedding mechanism it is desirable for many reasons to have a simple and ready means of turning the card cylinder backwards or forwards rapidly in order that any desired card may be brought into position to face the needles. While this is necessary in all harness weaving when a weaver requires to "pick back," *i.e.* to remove a number of shots of weft in order to correct a fault in weaving, it is still more necessary with almost all self-twilling jacquards, where the patterns are generally of such a nature that it is usually essential to run or turn back the cards rapidly to a given point without weaving, and where it would be too expensive to provide a set of cards sufficient for the complete length of the cloth without repetition. As a matter of fact in many cases it would be impossible to accommodate such a complete set. For example, to weave certain table-cloths each of three jacquard machines requires 4500 cards from start to finish, but the pattern on the last 1800 cards is the same as that

on the first 1800 cards but in the reversed order, while the pattern on the central 900 cards is not repeated. The complete pattern may therefore be produced by providing 2700 cards only, and weaving straight on from card No. 1 to card No. 2700, then reeling back the last 900 cards without weaving until No. 1800 is reached, and then to continue weaving with the remainder of the cards working backwards from No. 1800 to No. 1.

In many cases no special provision is made for the reeling back of the cards, with the result that they are often torn by the weaver as she pulls them round by hand. In other cases an apparatus of a makeshift nature is provided, which acts more or less indifferently. A card reeler which has been found to give perfect satisfaction, and which is patented by Mr. Alexander Duncan, is that illustrated in Figs. 170 and 171. It consists of two shafts A and B which are mounted on the cylinder frames C, and therefore moves out and in with them; sprocket wheels D, D on shaft A; pitch chains E, E and sprockets F, F on the card cylinders G, G. Further sprocket wheels H and J and short pitch chain K are provided in cases where the cards fall over the warp, *i.e.* when they are at the back of the loom, in order that the large sprocket wheel L, in this case compounded with J, may be mounted on the rear end of the cylinder slide rod M, and thus be more or less vertically above the front rail of the loom on which the hand sprocket wheel N is mounted in a convenient position for the weaver. When the cards fall over the weaver's head the sprocket wheel L is fixed on the shaft A, sprockets H and J and chain K being dispensed with, and the long pitch chain O falls directly from shaft A to hand wheel N. Small pulleys are mounted at suitable intervals on shaft

B, and are connected by straps P to the spring hammers

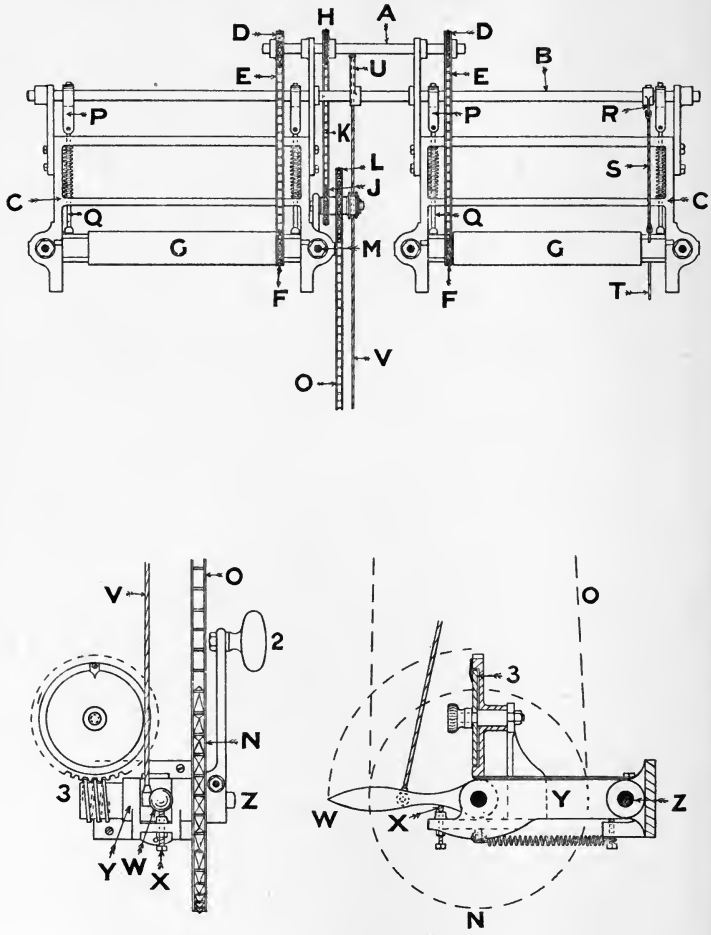

FIG. 170.

Q, so that the latter may be lifted clear of the cylinders

when the cylinders are required to rotate. A short lever R, also fixed on shaft B, and cord S raise the double catch T for similar reasons. Spring hammers and catch are raised by the weaver's hand through lever U,

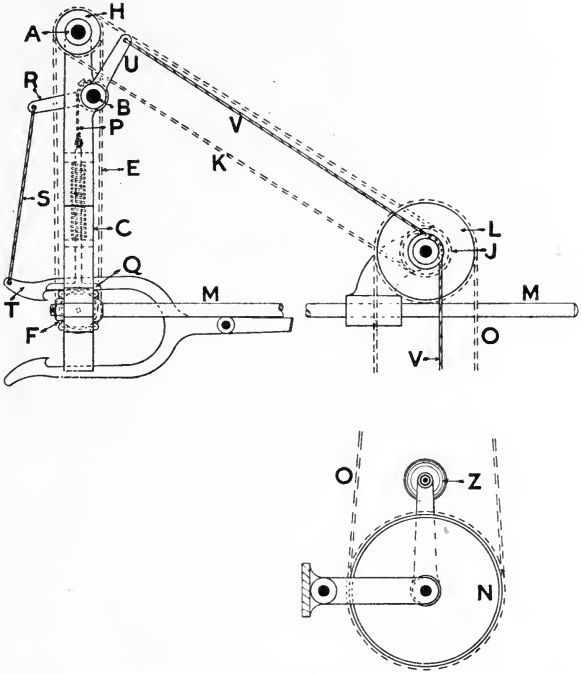

FIG. 171.

cord or wire V, and lever W fulcrumed upon the spindle to which sprocket N is fixed. Since the catch T is double, for working backwards as well as forwards, a stop is provided in set-screw X to limit the travel of lever W and thus prevent the bottom catch from being

raised into contact with the cylinder head when the weaver is reeling back. Bracket Y is flexibly mounted on the short spindle Z in order that the chain O may accommodate itself to the slight variations in distance between the centres of sprockets L and N, due to the movement of the slide rods.

It is of course necessary that the cylinders should be placed out of reach of the needles before any attempt is made to reel back the cards, but that being done, the weaver simply pulls lever W down to the horizontal position with the left hand, and rotates the hand wheel N with the right hand as rapidly as she can. Various ratios of gearing can be arranged, but 4 or 5 cards for one revolution of the hand wheel N gives a sufficiently rapid movement to the cards. Five cards per revolution makes mental counting of the cards reeled a simple matter for large numbers, but four cards per revolution enables the weaver to count or to place single cards in position with greater certainty, since the handle 2 must always occupy one or other of the four cardinal points of the circle.

A numbering or counting apparatus, consisting of the usual worm and worm wheel, and shown at 3 may also be provided, but this is usually neglected by the weavers, who prefer to count mentally where counting is necessary. Further advantages of this motion, besides the saving of time and of cards in reeling, are the facts that it ensures simultaneous turning of all cylinders, and simplifies the method of controlling them, since one catch does for all, and only one shotting disc is required for self-twilling jacquards although four machines may be mounted on the same loom.

Harness Mounting.—This term is applied generally to the

method of connecting the hooks of the jacquard with the mails or heddles through which the warp yarn passes. Of the two well-defined methods of mounting—viz. the London and the Norwich ties, — the former is what might be termed the more complex system, and is seldom found in the jute or linen industries. In this system the long sides of the jacquard cylinder and of the harness reed or comberboard are at right angles to each other, with the cards falling over either end of the loom. This entails a quarter-turn or twist upon the harness, and while perhaps improving its appearance to the eye and steadying it while working, undoubtedly has a tendency to shorten its life because of the friction generated between the harness cords. It possesses an apparent advantage in the fact that the harness cords may be taken from any side of the jacquard to either the front or the back of the comber-board, thus permitting the draft of the yarn to be straight from front to back, or vice versa, right across the web. This, however, is of little advantage, since it has no effect on the direction of the twill in those portions of the pattern that are mounted backwards or centre tied. For other reasons, such as cases where a number of machines are situated over one loom, and in factories where probably every loom is employed on damask work, the Norwich, system is much more suitable. A further advantage obtains in the latter system when the driving connections and the card space are considered.

In the Norwich system of mounting, the lines of the jacquard cylinder and of the harness reed or comberboard are parallel, while the cards fall either over the warp or over the weaver's head. This gives a straight and simple harness, but the harness cords to the back or to the front of the comberboard must be brought from the correspond-

ing side of the machine. This causes the draft over any turned portion of the harness to run in a direction opposite to the normal, which may be either from back to front or from front to back, beginning at either selvage.

We hope to illustrate and describe the particular mountings or ties necessary for different patterns in a future volume. In the actual mounting of the harness, probably the first points demanding consideration are the height and the position of the machine or machines. The former may vary according to the overhead space available, but generally it should be as much as possible in order to give sufficient drop to the cards while working, and yet leave enough head-room for the weaver; besides, a good height makes the motion easier on the harness, especially if over a wide loom. Machines over narrow looms can be placed at a less height than those over broad looms, since the harness does not open out at so sharp an angle. It is, however, usually more convenient to have one recognised height for all; from 10 feet to 12 feet from the floor to the jacquard is the usual distance.

As to the general position of the machine, this should be arranged so that the central hook of the jacquard, or the central point of the machines, if two or more are to be used, should be vertically over the central point of the comberboard. Beams for supporting the machines may run either with or across the line of the comberboards. The former method is decidedly preferable with the Norwich system of mounting, as it is then only necessary to arrange all comberboards in a line, no matter what the widths of the looms may be. Any practicable number of machines may also be arranged over one loom without any alteration of the distance between the beams. A further advantage is that the beams form a suitable support for the shaft from which

the griffes of single-lift jacquards are driven, besides in many cases affording a suitable base for the feet of the machine itself. This latter is not always advisable, however, since different machines may vary considerably in width; indeed, it is now a fairly extensive practice to leave a space between the beams large enough to meet the requirements of the widest machine which is likely to be used. The machine is then supported by short cross beams or stools bolted to the main beams. Cast upon the upper surface of these stools, which are so constructed as to act as oil drip pans, are hollow pedestals to which the feet of the jacquard are bolted. The main beams may be of timber of satisfactory dimensions, but a stronger, lighter, and more convenient, as well as a more sightly, support is the rolled-steel inverted channel girder, similar to that indicated at A, Fig. 172, or a girder of the usual I section. Brackets may be designed for use with these girders which render it unnecessary to drill the beam for bolt holes at any point. These girders or beams may be supported either by suitable hangers from the roof of the shed, or, and preferably, on special columns from the floor. One method of supporting the machine and the driving shaft is shown at B and C respectively in the same figure.

Comberboards or harness reeds D are necessary in order that the harness cords E and mails F, Figs. 172 and 173, may be kept in their proper position and at the desired width. Comberboards are sometimes made of one solid piece of hard wood drilled to the correct pitch or sett; but the more modern method is to build them of small sections of thin hard wood, each section containing three or four rows of holes. The desired width of the board is then obtained by fixing the necessary number of sections into a grooved frame. Since the comberboards wear away much

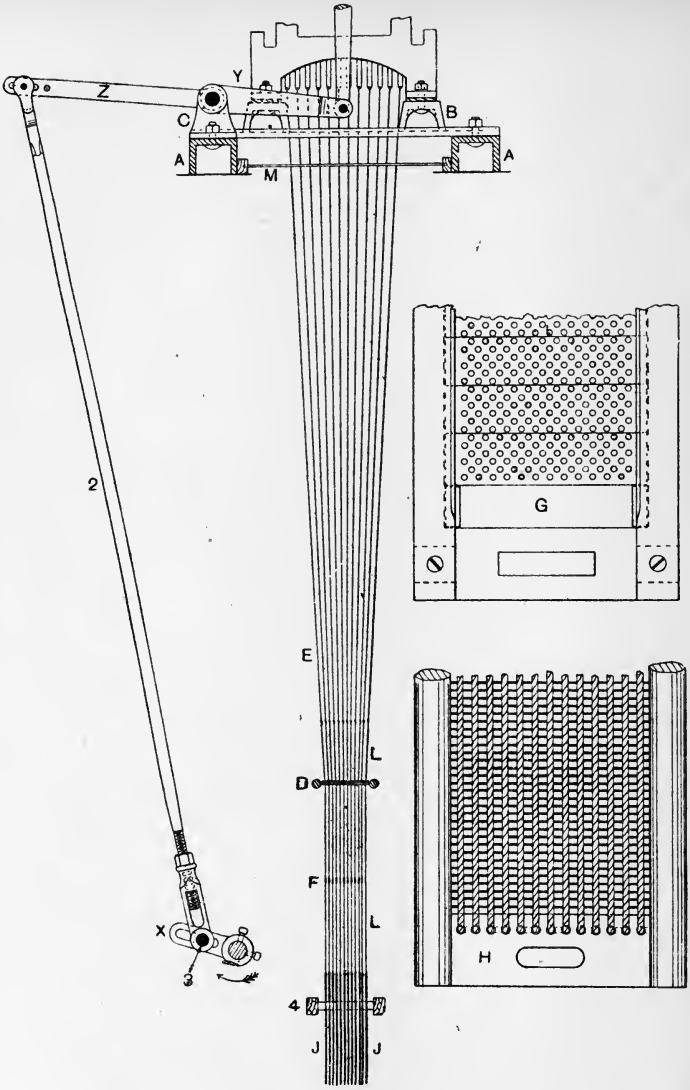

Fig. 172.

more rapidly near the ends than in the centre, this arrangement of sections offers an economical means of replacing worn portions, besides affording facilities for slight adjustments in the width.

Holes are drilled to suit any sett of fabric, but a row from front to back of the board must contain the same number of holes as there are hooks in a row of the jacquard from needleboard to spring box, alternate rows of holes being usually arranged in a zigzag manner as indicated in the detached plan view G, Fig. 172. In double-lift machines two hooks will, of course, count as one. The relation between the sett of the comberboard and the sett of the cloth, reed, or warp may be found as follows:—Suppose a cloth is to have 60 threads per inch of warp in the reed, and is to be woven by a 600's jacquard. It is evident that the board must have 12 holes in a row across and 5 rows per inch, or $12 \times 5 = 60$ holes per inch. If the same cloth were woven by a 400's jacquard, the board would require only 8 holes in a cross row, with $\frac{60}{8}$, or $7\frac{1}{2}$ rows per inch—in reality, 15 rows in 2 ins.

Harness reeds are constructed on the same principle as loom reeds. They fulfil the same purpose as comberboards, are cheaper, and in many respects more satisfactory. They are as adaptable to all changes of work, are as easy upon the

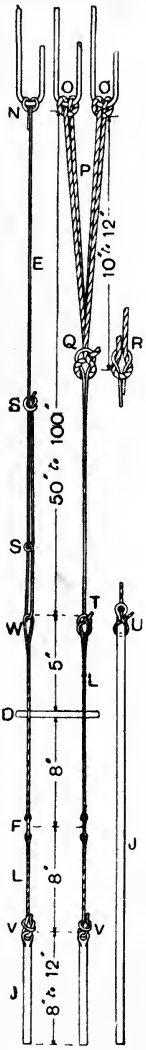

FIG. 173.

harness, and are free from the annoying saw-cuts found in worn comberboards; in general, however, comberboards are more suitable than harness reeds for the "London" method of tying. Harness reeds may be built to any sett, the longitudinal divisions being obtained by passing cords or wires from end to end of the reed, as shown in the detached view H, Fig. 172. The cords may be varied in number as required. Harness and loom reeds should be built on the same basis, so that calculations may be simplified. Given a 50-porter weaving or loom reed, 2 ends per split, the warp being controlled by a 400's jacquard, this would require a $\frac{50 \times 2}{8} = 12\frac{1}{2}$-porter harness reed. This sett of reed could be built, but, in some cases, it might be advisable to use a 13-porter reed and miss or "filey" every 26th row $\left(\frac{13}{13 - 12\frac{1}{2}} = \frac{13}{\frac{1}{2}} = 26\right)$ if there were no broken rows in the mounting of the jacquard. With broken rows in the mounting it is generally necessary to have a finer reed or board than the calculation shows, in order that the harness may not be too wide. Given a 45-porter reed, with three ends in a split and warp controlled by a 600's jacquard, the harness reed necessary would be $\frac{45 \times 3}{12} = \frac{45}{4} = 11\frac{1}{4}$ porter. This would be obtained by using a 12-porter reed and missing splits or rows as follows:— $\frac{12}{12 - 11\frac{1}{4}} = \frac{12}{\frac{3}{4}} = 16$, or every sixteenth row in the harness would be missed. As a matter of fact, the sixteenth row would not be missed entirely, but 6 harness cords would be inserted into the fifteenth split, and the remaining 6 harness cords into the sixteenth split; this would be equivalent to missing

one row in 16, and would also distribute the cords satisfactorily.

Harnesses may be built at the loom or in rooms set apart for the purpose. When the latter method is adopted the work may be done more expeditiously, and where changes of mounting are of frequent occurrence a considerable saving of time is effected, since the harness to be used next may be prepared while the loom is still weaving with the harness which is to be taken out. Both methods are widely practised, but it is generally more satisfactory to tie up the harness at the loom. In determining the position of the comberboard or harness reed, attention has to be paid to the travel of the lay, the lift of the jacquard, and the depth of the shuttle. The board should be supported at each end by slotted brackets, so that it may be moved closer to or farther from the lay of the loom as occasion requires. It should, however, be as low down and as far forward as possible consistent with the free movement of the harness, but clear of the upper shell or reed cap so as to avoid the danger of trapped fingers, and to leave a reasonable amount of room for taking up broken threads. After being placed in position, a harness reed is marked off into its various divisions of borders and centre portions by tying pieces of harness twine around or across the reed. Comberboards may be treated similarly, or chalked, as thought best. The reeds are then filled by dropping prepared lingoes, which consist of a mail F, a lingoe J, and the top and bottom couplings L, Figs. 172 and 173, through the proper split and row, while the boards are filled by drawing the top coupling up through the proper holes. All mails are then threaded upon light steel wires, which are in turn supported in a box or frame by a series of cross pins, which pass above and below those on which the mails are threaded,

and retain them in this fixed position while the harness is being tied. This box, or frame, requires to be levelled very accurately across as well as along its entire length, and is usually made of stiff, hard wood (in wide widths preferably of wrought-iron bars), and is for the time being roped to the centre cross rail of the loom, to prevent yielding when tying up. The level of this box, or rather of the mails it contains, has to be very carefully determined, and is in many instances arrived at by means of a gauge which is found by experience to suit a given type of loom. This is cut to indicate the distance from the level of the breast beam to the upper side of the top cross pins. A more general way is to fix the frame so that the centres of the mails are half the depth of the shed plus $\frac{1}{4}$ to $\frac{3}{8}$ in. below the level of the breast beam. Thus, assuming the lift of the harness to be $3\frac{1}{2}$ ins., the centre of the mails would be $1\frac{3}{4} + \frac{3}{8} = 2\frac{1}{8}$ ins. below the level of the breast beam. This does not always suit, however, since the position and the bevel of the lay relative to the level of the breast beam vary in different looms, and a better general guide might be to have the centre of the mail about $\frac{1}{4}$ in. under the line of the race of the lay continued backwards when the lay is full back. This extra depth allows for the slight contraction of the harness when the mails are released from the frame, and for the tendency which the lifted portion of the shed has to raise slightly the portion left down. Since the amount of contraction depends almost entirely upon the degree of tension imparted to the harness by the tier or mounter, it is practically impossible to give an absolutely correct rule. Previous to tying up it is, of course, necessary to attach a sufficient number of tail cords to the hooks of the machine, the number to each depending entirely upon the particular mounting. Thus, suppose a 600's jacquard

were to be mounted for a tablecloth, the border of which was arranged 200 double, with 100 single between, and to have six repeats in the centre of 300 each: the first 200 hooks of the jacquard would have four tails each (two for each border), the next 100 hooks would have two tails each (one for each border), and the last 300 hooks would have six tails each (one for each repeat). Selvages, etc., would have to be considered beyond this. Tail cords may be prepared in various ways, a convenient and simple one consisting in having a small frame in which several bobbins may be placed and on which the harness twine has previously been wound. The ends from these bobbins are then taken and warped around two wooden pins, fixed at a suitable distance apart, until the required number of tails has been obtained. If the harness is a narrow one, all the tail cords may be warped of the same length, but if of any considerable width it is more economical to warp them of different lengths to suit the different portions of the mounting. For this purpose one of the warping pins should be made adjustable. Harness twine should be made from the best flax yarns, and is usually 3, 4, or 5 fold, according to the class of work for which it is intended. A 4-fold 3 lb. to 4 lb. flax or 16 to 12 lea yarn makes a very serviceable and satisfactory twine for a wide range of fabrics. On the other hand, some prefer much finer yarns than the above, and for a similar class of work use 9 ply 30 lea. This certainly gives a superior cord, but it is obviously more expensive. With the view of reducing friction and of prolonging the life of the harness, it is customary to coat the tail cords with a wax varnish for about 8 to 10 ins. about the part which comes in contact with the wires of the heck M. For a similar reason the couplings L are varnished and twisted to within about 3 ins. of the upper end of the

top coupling, the latter being left free of varnish at this point for the purpose of tying up to the tail cord. These latter are usually attached to the hooks of the Scotch type —that is, closed at the top of the bend, see 2, Fig. 129, in the manner shown at N, Fig. 173; or, as is sometimes done, the tail end of the cords may be passed through the loop of the twine a second time and then drawn tight. A further method of attaching, technically termed the clove hitch, is shown at O. This latter, however, although applicable in principle to both types of hook, is more generally used in the case of double-lift machines, for the attachment to the hooks of the neck cords P. Two methods of tying the tail cords E to the neck cords P are indicated at Q and R respectively, the latter being more easily tied, although the former is the more secure in this instance. The knot at Q is a fair representation of what is commonly known as the "weaver's" knot, and is also known as an over-thumb knot, or sheet bend, while that at R indicates what is very widely known as a reef knot. Both are regularly met with in the operation of weaving, and are therefore worthy of particular notice.

After being attached to the hooks of the jacquard, the tail cords are passed between the wires of the heck M in short rows, and the heck is then fixed in its position beneath the machine. Each long row of the harness is now twisted up out of the way, so that tying up may be proceeded with. Beginning with the back row of the machine—*i.e.* the one farthest from the weaver—the tail cords are leased up by the mounter, hook by hook in regular succession, and, when thus leased, are placed upon two special pins at the side of the loom in such a manner that the cords from the hook at the leading end of the machine can be taken off first. These are now taken and

severally tied to their respective couplings L in the various repeats or portions of the mounting. Cords from the second hook of the same row are next taken and treated similarly, the process being continued until that row is finished and dressed, when the next row is taken, and so on until the harness is completed.

Of the several ways of attaching the tail cords to the couplings, two of the most generally employed are shown in Fig. 173. When there is a probability of the width of the harness being altered, the method indicated at S is most convenient, since it is possible to untie the cord and remount it for a slightly wider or narrower width. This method consists in passing the end of the tail cord through the loop of the top coupling L, then casting it around the main cord about 3 ins. up, and finally tying it as indicated at a farther distance up of 6 ins. This arrangement holds quite satisfactorily, since the twine is dressed or starched after tying. The second method, indicated at T, makes a neat and satisfactory tie, and may of course be used with the tail cord coming direct from the hook, as well as from the neck cords of a double-lift machine. The neck cords P should be about 10 to 12 ins. long from hook to knot, and the latter should be at least 3 ins. clear of the heck beneath. The lingoes J vary in length from 8 to 12 ins., and in weight from 20 to 40 to the pound for ordinary work. For some of the heavy jute fabrics, lingoes, weighing 4 ozs. each, or even more, are used. In many cases the threads forming the borders require heavier lingoes than those threads which form the centre of the fabric; this is due to the smaller angle made between the cords and the comber-board, and the consequent increase of friction. The ordinary lingoes are now invariably made of wire, flattened and punched at one end to receive the ends of the bottom

coupling twine L. These are passed through the hole and tied round the lingoe, as indicated at U; this knot is then slipped up over the head of the lingoe, the ultimate result being shown at V. The two ends of the top coupling twine are simply tied together in a weaver's knot about W. The mails F are usually of brass for fine or medium work, and of steel for coarse or heavy fabrics. It is advisable to have the lingoes J surrounded by a wooden or other framework 4 to prevent them from swaying. This framework should be divided into compartments, about 3 to 4 ins. long, by means of cross-plates or wires passing between the lingoes.

Fig. 172 also shows what is probably the simplest and most efficient method of driving single-lift jacquards; that is, by means of a simple crank X set-screwed on the extreme end of the crankshaft of the loom. The slot in X permits of sufficient variation in lift being obtained, while adjustment as to time of shedding is arranged by altering the position of X on the crankshaft with relation to the crank for actuating the swords. Assuming that a lift of the harness of $3\frac{1}{2}$ ins. is desired, the griffe of the machine would require to travel about 4 ins., since the blades must clear the hooks by about $\frac{1}{4}$ in., and the heads of the hooks are from $\frac{3}{16}$ to $\frac{1}{4}$ in. deep. Four inches of a lift means that the lever Y (11 ins.) moves 4 ins. at its extremity, and that the lever Z (16 ins. to the point of connection with the rod 2) must move $\frac{4 \text{ ins.} \times 16}{11} = 5\frac{9}{11}$ ins., say 6 ins. The stud 3 must therefore be fixed 3 ins. from the centre of the crankshaft. As to the time of shedding, this is in a measure subject to circumstances, but the ideal position is undoubtedly to have the crank X and the rod 2 in one straight line, with the griffe at the extreme top position, when the crank of

the loom and the connecting arm to the swords are also in one straight line, with the lay full back.

In setting a double-lift jacquard for time of shedding, the same general principle may be followed: place the lay of the loom full back with the crank and connecting arm in one straight line, and fix the double-throw crank on the wyper shaft with one of its crank pins in a straight line with the centre of the shaft and its connecting rod. It is further necessary to see that each griffe, when in the lowest position, is exactly the same distance below the hooks, and that the cylinders are timed to correspond; the cylinders should be close to the needle board when the griffe is rising, with the blades on a level with the heads of the hooks.

CHAPTER XIII

PICKING

PICKING, the technical term invariably applied to the operation of driving the shuttle from side to side of the loom, is necessarily timed or arranged to follow the action of shedding in the sequence of weaving operations. To an untrained and casual observer this operation generally seems a simple one, but there is probably no movement of the loom more elusive as regards the effect of the actions which take place, and certainly no other part of the mechanism of a plain loom which gives more trouble to, or requires more attention from, mechanic and tenter alike. Nor is this surprising when one considers closely the varying conditions under which the mechanism has to act, the functions it is required to perform, and the many different

parts of which it is composed. Conditions such as light and heavy warps vary the friction on the shuttle in its passage through the shed. The shuttle itself is a practically rectangular piece of hard polished wood, tapered at the ends, and tipped with iron ; it measures, in an average case for ordinary jute fabrics, 20 ins. long by about 2 ins. sq., and weighs 2 lbs., but varies in weight for other yarns and fabrics from something under 12 ozs. to 3 lbs. and over, with a proportionate variation in dimensions. Such a body in a 46-in. reed space loom, running at 150 picks per minute, has to travel an approximate distance of 63 ins. in about $\frac{7}{45}$ of a second. It must therefore attain an average velocity of at least 34 ft. per second without making any allowance for frictional or other resistance. At or near the end of its journey it is more or less abruptly brought to a dead stop ; during this time its remaining energy is utilised in pressing out the swell, and raising the tongue of the warp protector clear of the "knee" or "frog," thus permitting the loom to run. Consider also the fact that the plane or race board on which the shuttle travels is not stationary during the passage of the latter, but that, on the contrary, it moves backwards and downwards with a decreasing velocity, comes gradually to rest, and again moves forward with an approximately equal increasing velocity ; also that the plane itself is not smooth, since it is formed by that portion of the warp yarn in the lower part of the shed. Then again as the shuttle runs, its load decreases gradually as the weft is withdrawn from the pirn or cop ; and, as momentum varies in proportion to mass, it is evident that the force or "pick" must be sufficient to send the empty shuttle across, and will therefore be more than necessary for the shuttle and yarn combined. Further, since the eye of the shuttle is in the front near one end, there will be a certain pull

exerted by the weft thread when travelling in one direction, creating a tendency in the shuttle to leave the reed, and when travelling in the other direction, tending to make it bear hard on the reed. When consideration is also given to the fact that the picker in many looms travels along a spindle which is moving in a direction approximately at right angles to the path of its own travel, that picking arms, and leathers where necessary, are more or less elastic, and that the whole action partakes very much of the nature of a shock, it will be seen that the question is one of considerable difficulty when considered closely in detail.

Of the picking mechanisms employed there are only two types which are usually applied to looms for jute and linen weaving, and of these two the one which is by far the more widely adopted is the cone overpick—the term "cone" being taken from the fact that the anti-friction roller upon which the picking wyper acts is conical in shape, while the term "overpick" is applied in all cases where the picking arm proper is wholly above the shuttle-box. In the pick under consideration the mechanism consists of a picking wyper or tappet A (Figs. 174 and 175) keyed to the bottom or wyper shaft B, and therefore revolving with it; also of a stud C (carrying a conical anti-friction roller) firmly bolted in a tapered hole in the vertical shaft D, to the head E of which is clamped a wooden picking arm F. The head E is invariably made in two portions, an upper and a lower, the faces of which come together and have radial teeth cast upon them to ensure a rigid grip, while permitting any necessary adjustment in the position of the arm F. As the shaft B revolves, the wyper A, in a rapidly increasing ratio, drives the cone stud C through a certain arc of movement (the effective value of which depends upon the stroke of A, and also upon the point of contact of A with

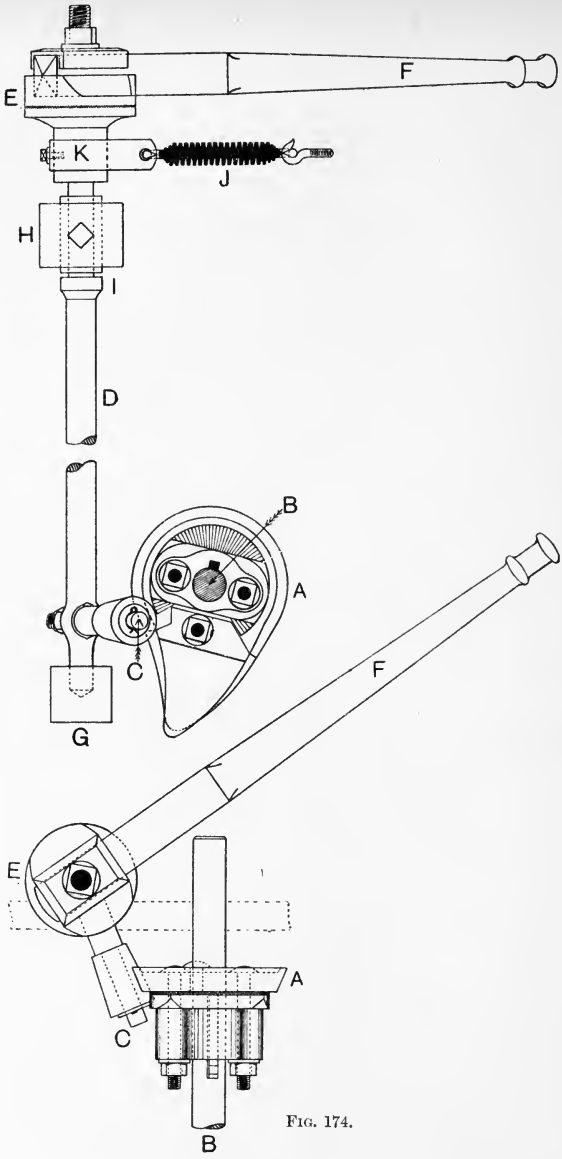

FIG. 174.

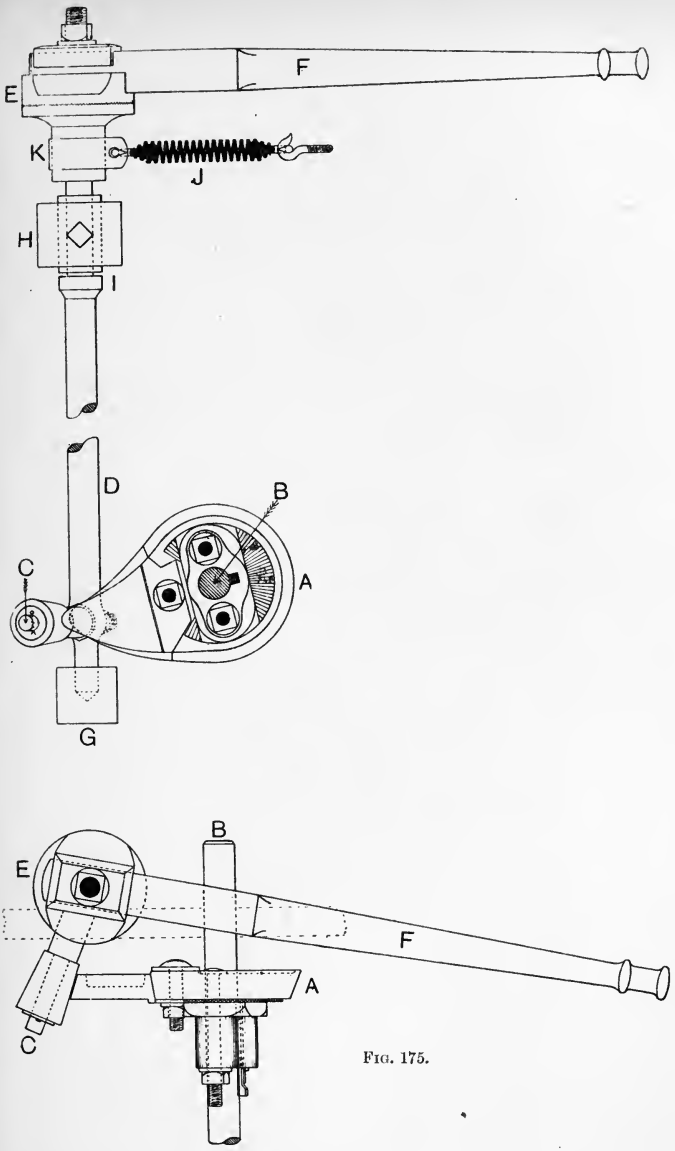

Fig. 175.

the cone), the shaft D rotates, and the arm F travels rapidly inwards. From the extremity of the arm F a leather strap is connected to the raw-hide picker on the picking spindle (see Fig. 83, page 153), and thus conveys the movement of the arm to the shuttle.

Figs. 174 and 175 show respectively the wyper A, and therefore the arm F, at the beginning and at the end of the stroke. The shaft D is supported by a footstep G at the bottom, and in a bracket H near the top. Both G and H are cast upon or bolted to the outside framework of the loom, so that the wyper A may be brought as close as possible to the bearing of the shaft B in the framework, securing by this arrangement the greatest amount of stability and rigidity in action. On the shaft D a shoulder I is formed, which impinges against the bush in the bracket H, and counteracts the tendency of the wyper A to impart a vertical movement to shaft D. This might be termed the one objection to revolving the crankshaft in the direction shown in Fig. 58 (page 114). When revolved in this direction the wyper A must always act upwards, and as the bush in the bracket H is simply held in position by a set-screw countersunk into the bush, it is in time driven upwards, by the action of shoulder I enlarging the countersink, until a very harsh pick results, producing an exceedingly undesirable vibration in the loom. As things are at present situated, the only remedy is to turn the bush partially round and drill out a fresh countersink; but we think it is worthy the attention of loom-makers to try to devise some method of fixing the bush in such a manner that the impact of the shoulder I would be taken up by the bush as a whole, and not by the point of a set-screw, and that play, if any, could be taken up in a better method than at present.

In looms which revolve in the direction shown in Fig. 59, page 115, the wyper always acts in the downward direction, the impact here being sent into the footstep G. In many looms where this downward motion obtains, the shaft is not provided with a shoulder I, consequently D rebounds slightly immediately the pressure of the wyper A has left the cone stud C. When acted upon in this direction the cone stud C should be as much above the level of the shaft B as it is shown below that level in Figs. 174 and 175.

There is one decided objection, however, to revolving the crankshaft in this direction. When the loom is at rest the crank is liable to fall, or to be accidentally pushed to the bottom position, and, as this is near the picking position, the shed is open, and the crank in an undesirable position for restarting the loom; in addition to this the warp threads are in tension, and the weaver is given unnecessary trouble in taking up or mending broken threads. It also follows, that in many cases during the whole period of rest, the threads are in tension, whereas with the wyper revolving as in Figs. 174 and 175, the leaves in plain cloth are level, and the threads therefore slack, when the crank occupies the lowest position. It will be understood that a duplicate set of similar parts to those shown in Figs. 174 and 175 is arranged at the other side of the loom for the purpose of returning the shuttle, the only difference being that the wyper A of the second set is fixed with its point diametrically opposite to that of the first set.

After being acted upon by the wyper, the stud C and the arm F are returned to their original positions by the action of the spring J, which is hooked to the top rail of the loom by one end, and secured by the other end to a strap K, set-screwed to D as shown. In some cases the cone stud C, instead of being in a fixed position in shaft

D, is so arranged that its position or plane with regard to the plane of the wyper shaft B may be changed. When this is so, the shaft D may be slotted for a short distance, and C bolted in the slot; or the inner end of C may be enlarged and bored out to receive the shaft D, to which it is so keyed that the action of the wyper always tends to tighten C on the shaft.

Everything considered, we are of opinion that the adjustable stud is not so satisfactory as the fixed one, since, although intended as a ready means of hardening or softening the pick of the loom, and being in some cases necessary, due to badly designed picking wypers which allow of no lateral adjustment on the wyper shaft, they are often, through ignorance or indifference, found too near the same level as the wyper shaft itself, allowing the wyper A to get too much under the cone, and thus sending the force intended for picking, vibrating through the loom instead.

As the cone stud C traverses a horizontal plane throughout its movement, it follows that the smoothest working pick will be obtained when the force acting upon C acts in the line of its movement, and that any tendency to force it upwards or downwards, as the case may be, is simply energy spent in destroying some portion or other of the loom. It is practically impossible to make the picking wyper act in a perfectly horizontal direction, but as in the construction of any picking wyper the stud C is assumed to be a certain distance above or below the level of the shaft B, this position should always be rigidly adhered to, and on this account it is an advantage to have the stud C a fixture in shaft D.

For practical and economical reasons, such as replacing worn or broken portions, the wyper A is built of three

parts: the truck or boss L (Fig. 176), the circle or plate M, and the point or nose N. The truck L, which is keyed to the wyper shaft, is provided with radial teeth on its face to take into corresponding radial teeth on the face of the plate M, to which it is bolted through the bolt-holes O in the truck L and concentric slots P in the plate M. The point N is semi-dovetailed at Q, and is bolted to the plate M, which is grooved to receive it. The slots P permit of a certain amount of adjustment of the wyper with regard to the time of picking; but if further adjustment be

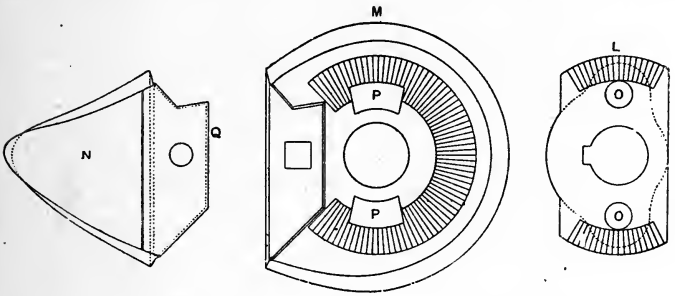

FIG. 176.

necessary, it can be obtained by taking the spur pinion and spur wheel of the crank and the wyper shaft out of gear, and advancing or retarding the wyper shaft by one or two teeth as may be desired.

In approaching consideration of the construction of a picking wyper, it would appear that one of the first points which would naturally fall to be considered is the velocity at which the shuttle must travel. It is probably true, however, that in no case of actual practice has the construction of the wyper been approached from this point as a basis, but rather that the present form of

wyper has been developed by years of experience and trial until its working outline has been reduced to some suitable form of geometrical construction.

Referring to the text in connection with Figs. 58 and 59, pages 114 and 115, the reader will readily see that the time available for the shuttle to travel across from box to box cannot be more than 165 degrees of the crank's revolution, otherwise the loom will knock off. The shuttle begins to move at the top centre, and it leaves the picker approximately 40 degrees later, so that the maximum angle for the travel of the shuttle is, according to the points marked in Fig. 58, $205° - 40° = 165°$. In many cases the knocking off position is at 180°, which leaves a maximum angle of $180 - 40 = 140°$. Now the total length of lay in a 46-in. reed space loom intended for jute fabrics is made up as follows :—

Reed space + Two boxes = total length of lay
46 inches + (27 ins. + 27 ins.) = 100 inches,

and the distance through which the shuttle has to travel is :—

Length of Lay.	Pickers and Box Ends.	Shuttle.	Travel of Picker.	
$100'' -$	$[(3'' + 3'') +$	$20''$	$+ 11'']$	$= 100'' - 37'' = 63$ ins.

Therefore the shuttle must travel the full distance of 63 ins. in 140° of the crank's revolution. If the speed of the loom is 150 revolutions or picks per minute, the total time occupied by the shuttle from the time it leaves one box until it comes to rest in the opposite box will be :—

$$\frac{60 \text{ seconds}}{150 \text{ picks}} \times \frac{140°}{360°} = \frac{7}{45} \text{ of a second.}$$

Therefore the average velocity of the shuttle over the full distance of its travel is :—

$$\frac{63 \text{ inches}}{12'' \text{ per foot}} \div \frac{7}{45} \text{ of a second,}$$

or

$$\frac{63}{12} \times \frac{45}{7} = 33{\cdot}75 \text{ feet per second.}$$

In the first edition of this work we based our estimate of the maximum velocity of the shuttle on its average velocity for its full travel, but it will be evident that greater accuracy in this direction will be obtained by basing the necessary calculation on the average velocity of the shuttle for that restricted time during which it is crossing the warp, for, immediately it comes into contact with the box front or swell, its velocity is rapidly diminished. From recent experiments conducted personally and under our supervision we are able to state that the shuttle in the above loom travels approximately 42 inches in 90 degrees of movement or one quarter of a revolution of the crankshaft. The average velocity of the shuttle on this basis is therefore :—

$$\frac{60 \text{ secs.}}{150 \text{ picks}} \times \frac{90^\circ}{360^\circ} = \frac{1}{10} \text{ second for 42 ins. travel,}$$

and

$$\frac{42 \text{ ins.}}{12 \text{ ins.}} \times \frac{10}{1} = 35 \text{ feet per second.}$$

The problem, therefore, is to construct a picking wyper which will act upon the stud C in such a manner that the arm F, in conjuction with other parts, will convey to the shuttle a maximum velocity sufficiently greater than the average velocity ultimately to overcome the resistances of friction, etc., which are presented to it in its passage from box to box. It is not our intention to attempt to deduce

the force which must be developed to accomplish this, nor to discuss the particular distribution of metal contained in the loom frame, or the weight and dimensions of the parts employed, but it is naturally essential that all parts should have sufficient margin of strength to enable them to meet the force, and also to withstand the resistances due to the action of the swell upon the shuttle at rest in the shuttle-box.

We may now try to determine what the maximum or initial velocity of the shuttle must at least be in order that it may attain an average velocity of 35 feet per second. To do this, however, the following points should receive due consideration :—

1. The frictional resistances offered to the progress of the shuttle by the warp yarn, the reed, and the lay.
2. The retardation due to various changes of direction in the shuttle.
3. The retardation due to the pull of the weft.
4. The resistance of the air.

Of these the two latter are the least important, and a sufficiently close approximation to the value of the first one may be ascertained. The coefficient of friction due to this resistance, when starting the shuttle from a position of rest was originally determined by the authors as varying from 0·27 to 0·43 under normal conditions, but reaching as high as 0·53 in exceptionally adverse circumstances. In other words, when using a shuttle weighing 2 lbs., it would be necessary, under normal conditions, to exert a constant force varying from $2 \times 16 \times 0{\cdot}27 = 8{\cdot}64$ ozs. to $2 \times 16 \times 0{\cdot}43 = 13{\cdot}76$ ozs., or

$$\text{an average of } \frac{8{\cdot}64 + 13{\cdot}76}{2} = 11{\cdot}20 \text{ ozs. to keep the}$$

shuttle moving through the shed, such variations depending upon the position of the lay, as well as upon the state of the shed, and the quality and weight of the warp. Facilities are not yet available for the due determination of the value of resistances 2, 3, and 4, and, in further consideration of the subject their value and influence have been neglected.

All moving bodies have, in virtue of their weight and motion, a certain quantity of kinetic energy stored in them which is represented by the formula :—

$$\text{K E} = \frac{\text{W}v^2}{2g}$$

where K E = kinetic energy ; W = weight of the body in lbs. ; v = velocity in feet per second ; and g = gravitational attraction, 32·2. Therefore the energy stored in the shuttle of 2 lbs. weight calculated upon the average velocity of 35 feet per second will be :—

$$\text{K E} = \frac{\text{W}v^2}{2g} = \frac{2 \text{ lbs.} \times 35^2}{2 \times 32{\cdot}2} = 38{\cdot}04 \text{ foot lbs.}$$

But, since friction acts to reduce the velocity, the above average energy will be less than the initial energy by the equivalent of half the frictional resistance, that is by

$$\frac{3{\cdot}5 \text{ feet}}{2} \times 2 \text{ lbs.} \times 0{\cdot}4$$ (the coefficient of friction, which we purpose using, and which is greater than the average of normal conditions) = 1·4 foot lbs.

Taking the average energy as above, *i.e.*, 38·04 foot lbs., and the average velocity as 35 feet per sec., the initial or rather maximum velocity of the shuttle may be found as follows :—

$$\frac{V+\mu}{2} = v \text{ where } V = \text{maximum velocity}$$

v = average ,,

μ = velocity when the shuttle has travelled $3\frac{1}{2}$ feet.

Now $V^2 = \mu^2 + 2\,as$ where a = acceleration

s = distance travelled

and acceleration : gravity = frictional resistance : weight,

$$\therefore\ a\ :\ 32{\cdot}2\ =\ (0{\cdot}4 \times 2 \text{ lbs.}) : 2 \text{ lbs.}$$

$$\text{hence } a = \frac{32{\cdot}2 \times 0{\cdot}8}{2 \text{ lbs.}} = 12{\cdot}88$$

$$2\,as = V^2 - \mu^2 \qquad (1)$$

$$v = \frac{V+\mu}{2} \qquad (2)$$

divide (1) by (2)

$$\frac{2\,as}{v} = \frac{2(V+\mu)(V-\mu)}{V+\mu}$$

$$\text{hence } \frac{as}{v} = V - \mu$$

Substituting values already found we have :—

$$V + \mu \text{ or } 2v = 2 \times 35 = 70$$

$$V - \mu \text{ or } \frac{as}{v} = \frac{12{\cdot}88 \times 3{\cdot}5}{35} = 1{\cdot}288,$$

$\therefore$ by addition we get

$$2V = 71{\cdot}288$$

or $$V = 35{\cdot}644 \text{ feet per second,}$$

and by subtraction

$$2\mu = 68{\cdot}712$$

or $$\mu = 34{\cdot}356 \text{ feet per second.}$$

It must be remembered that while the average velocity of 35 feet per second has been determined by experiment, the maximum and final velocities have been calculated,

as already indicated, without consideration of the influences of the resistances alluded to in items 2, 3, and 4.

We shall now explain the construction of a picking wyper, the outline of which is very similar to many of those in actual use in looms for jute weaving, and will then endeavour to show how the combination of parts and power may develop the necessary maximum velocity which the shuttle must attain in the loom. Data necessary: distance from centre of vertical shaft D, Fig. 174 to centre of wyper shaft B = $6\frac{1}{8}$ ins. (see A to B in Fig. 177). Centre C of cone stud L over or under the level of shaft B, say $1\frac{7}{8}$ ins., see J to K, Fig. 177 (in looms with an upward beat this centre is above the wyper shaft, but in looms with a downward beat the centre is below the shaft). Distance from the centre of picking shaft A to the plane of centre of wyper = $5\frac{1}{4}$ ins. Angle described by the cone stud L = 37°, 30° of which are for the development of the pick, and 7° for rounding off the nose of the wyper. Acceleration to be given to the cone stud L, and therefore to the picking arm F (see Fig. 174) in the ratio of 1.2.4.6.10.18 for the first 30° of movement in six equal portions of time. Length of arm F from the centre of picking shaft D to point of connection with picking band, say $24\frac{1}{2}$ ins. Time for development of pick = 60° of the wyper shaft, and 10° for rounding off the nose. Approximately 40° of the first 60°, or 80° of the crankshaft, *i.e.*, from the time the lay is full forward, or about 10° above the true front centre until it reaches the top centre, are occupied in drawing up the band or strap, the other 20° of the wyper shaft or 40° of the crankshaft being occupied for driving the shuttle out of the box.

From any line, say B J in Fig. 177, which represents the line of the wyper shaft, set off B A at right angles

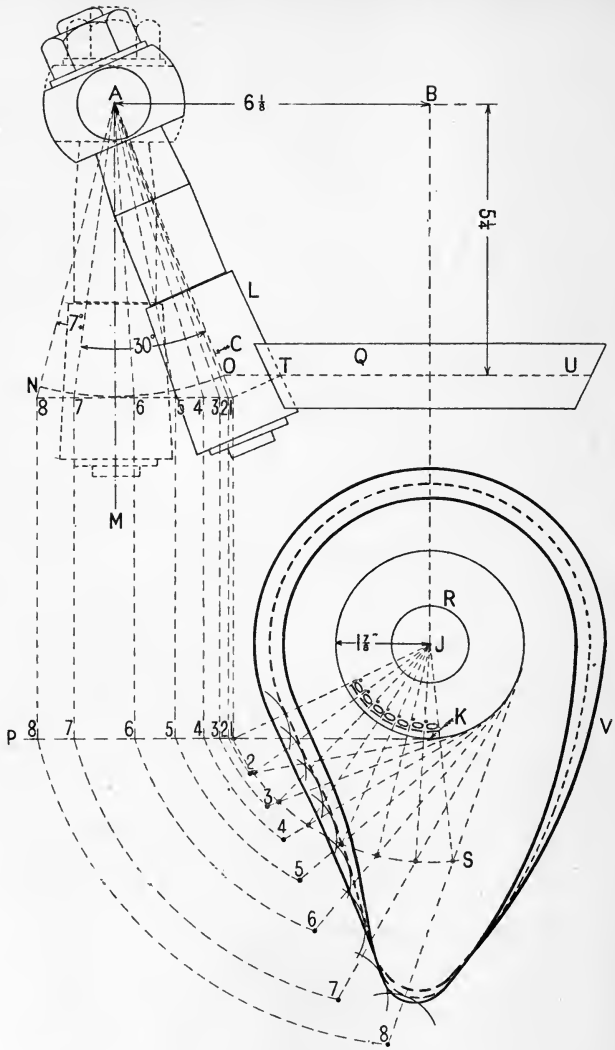

Fig. 177.

to B J and $6\frac{1}{8}$ ins. long. At right angles to A B draw A M parallel to B J. With A as centre and a radius of $5\frac{1}{4}$ ins. describe the arc N O so that the angle A N O equals 37° Divide the first 30° into six spaces in the ratio of 1.2.4.6.10. and 18. From centre A and through the points on this arc draw lines to meet the horizontal tangent to the arc at points 1.2.3.4.5.6.7. and 8. Project these points to line P K, parallel to A B, and sufficiently removed from the plane of the wyper Q to enable the elevation of the wyper to be drawn without interfering with the other parts of the drawing; or having chosen the centre J of wyper, draw line P K at a distance of $1\frac{7}{8}$ ins. below centre J. With J as centre describe circle R to represent the wyper shaft, and circle K to touch line P K, and join J to point 1 on line P K. With J as centre and J 1 as radius describe the arc 1 S. From point 1 on this arc set off 7 divisions of 10° each, or 70° in all; six divisions of 10° each are for the development of the pick, and one division of 10° for rounding off the nose. These points are represented by the small circles.

Since P K, the plane of movement of the cone stud L, is $1\frac{7}{8}$ ins. below point J, the centre of the wyper shaft, it follows that further lines representing this plane must be drawn tangentially to circle K. Seven further lines are therefore drawn tangent to circle K, passing through the circles on arc 1 S, and continued until they meet the corresponding arcs drawn from 1.2.3.4.5.6.7. and 8 on line P K and terminating at similar numbers 1 to 8. The points thus obtained represent the generating curve of the wyper and would be parallel to the face of the wyper if the same size of circle were drawn to represent the cone at these points. It will be quite clear, however, that the radii for the representation of the cone at the various

points will be of different values, since the effective diameter of the cone is constantly changing. Further, on neither side of the central line A M can any two radii be of equal length. When the wyper is at the commencement of its stroke, the effective radius of the cone is O T, but as the stroke is developed, the cone is moved outwards, or to the left in the drawing, and the effective radius decreases until the cone and the wyper shaft are parallel, when the radius of the cone is at a minimum; while beyond the central line A M, the working radius gradually increases, but remains less than the corresponding radius on the right of the central line. Also since the central line of the wyper is only at one point perpendicular to the axis of the cone, it is necessary, at all places except this one point, to use the major axis of an ellipse instead of the diameter of a circle to form the primary curve. The primary curve of the wyper, shown in dotted lines in Fig. 177, has been obtained by using the proper radii as found by the position of the cone at points 1.2.3.4.5.6.7.8. on the arc NO. The major diameters of the ellipses coincide in each case with the tangential lines, and the major radius is the distance from the central line of the cone stud to the outside of the cone along a line in the same plane as the central line T U of the wyper.

Such a wyper, even if it were drawn geometrically correctly and cast and finished accurately, would work properly only in one position on the wyper shaft—that indicated in the figure. All wypers of this type are capable of being adjusted on the wyper shaft in order that they may move the cone through a greater or a lesser arc for the important purpose of imparting a harder or a weaker pick, but such changes should only be made when it is impossible to obtain the desired result from other sources. If a change

of position on the wyper shaft is absolutely necessary, it is clear that the radii of the various ellipses on the drawing would not suit the changed conditions, and the face of the cone would not touch the face of the wyper at all points. It is therefore impossible to construct a wyper geometrically correct for more than one position, and for this reason the primary curve is often obtained by drawing circles at the points 1.2.3.4.5.6.7.8. instead of the major axes of ellipses. In rounding off the nose, circles of different radii are used in order to obtain the correct shape, and to leave sufficient metal for trimming up when it is worn. Although the actual sizes of these circles are more or less unimportant, it is very desirable that every point across the nose should be in contact with the cone until the last moment, so that the stroke will be as perfect as possible, and that the wear and tear of the two parts in contact shall be at a minimum. If only a part of the face of the wyper bear on the cone, grooves will soon be cut into the latter, or the part of the wyper which is bearing on the cone will be worn away, and imperfect picking will result. When the cone stud reaches its maximum velocity it flies entirely clear of the wyper, and in its backward movement impinges against the back of the wyper about point V. The back of the wyper from the nose to a point a little above V is drawn with a radius of about 11 ins.

In so far as the construction of a picking wyper is concerned, there are three distinct methods by which a harder pick may be obtained for wide looms and for other slowly running looms: (1) The arc of effective travel of the cone may be increased by using a larger nose; several different noses are made for this purpose; (2) The ratio of acceleration may be increased; (3) The time of development of the pick may be reduced.

To determine the velocity of the picking arm due to the mechanical contact between the picking wyper and the cone, we proceed as follows:—Determine by calculation the measurement of the chord of the arc described by the cone stud, and therefore of the picking arm, during the last period of acceleration. It will be noticed from Fig. 177 that, during this last period of acceleration, between points 6 and 7, that particular part of the arc is little removed from the horizontal line, and, in adjusting the various parts of the picking arm, it is desirable that during this same period of acceleration the end of the picking arm should travel approximately parallel to the line of the picking spindle in order that the movement of the arm will be conveyed unimpaired to the picker. The 30° in Fig. 177 are divided into 41 equal parts, of which 18 parts are allotted to the last period of acceleration, *i.e.*, $\frac{18}{41}$ of $30° = 13° 10'$. For further explanation these positions are indicated in Fig. 178, where the arc A C of 30° represents the effective travel

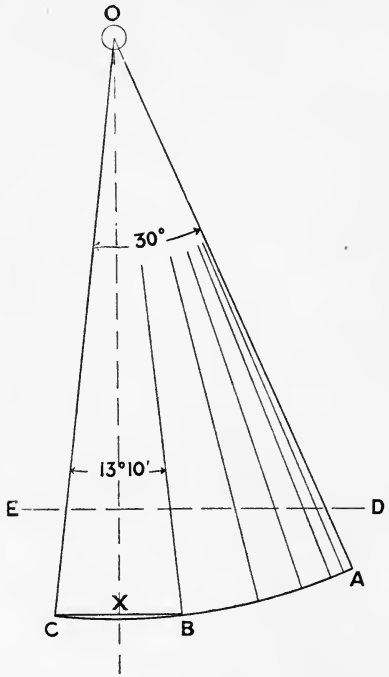

FIG. 178.

of the arm due to the action of the wyper alone. This arc is divided into six parts in the ratio 1.2.4.6.10.18, the last of which (13° 10′) is so arranged that the chord of its arc B C is practically parallel to the line of the picking spindle represented by the dotted line D E. Now B X and C X are each the sine of an angle of 6° 35′, so that the chord B C = 2 sin 6° 35′. From a table of natural sines we find that sin 6° 35′ for one-inch radius is 0·1146, and therefore for 24½-in. radius is $0{\cdot}1146 \times 24{\cdot}5 = 2{\cdot}8077$. Consequently B C, the effective travel of the 24½-in. arm during its last period of acceleration through the action of the wyper is $2{\cdot}8077 + 2{\cdot}8077 = 5{\cdot}6154$ ins. According to our construction this distance is covered in one-sixth part of 60°, or $\frac{1}{36}$th. part of a revolution of the wyper shaft. Assuming the speed of the loom to be 150 picks per minute, or 75 revolutions per minute of the wyper shaft, the time occupied in travelling this distance will be :—

$$\frac{60 \text{ seconds}}{75 \text{ revolutions}} \times \frac{1}{36} = \frac{1}{45} \text{ of a second,}$$

and

$$\frac{5{\cdot}6154 \text{ ins.}}{12'' \text{ per foot}} \times \frac{45}{1} = 21{\cdot}058 \text{ ft. per second}$$

as the average velocity of the extremity of the picking arm during the last period of acceleration. Since the acceleration over the whole pick is in the ratio of 1.2.4.6.10.18. the average velocities during the various previous periods will be in proportion to the last in the above ratio, and may be determined by calculation to be as follows :—

Ratio of acceleration	1	2	4	6	10	18
Period of acceleration	1	2	3	4	5	6
Average velocity	1·176″	2·352″	4·704″	7·056″	11·948″	21·058″

These, however, are only average velocities, and to determine the ultimate velocity of the picking arm at the

end of the 6th or last period, or at the end of the stroke of the wyper, it is necessary to estimate the average velocity of the arm for a further period of acceleration in the same ratio, and then to plot out a velocity curve to scale using the various average velocities as ordinates, and any convenient distance as abscissa. A sufficiently close approximation to the result obtained by the method suggested above may be got by taking the mean of the average velocity of the last period of acceleration and the estimated average velocity of a further period of acceleration. Now since the differences between the last four periods of the ratio of acceleration chosen are 2, 4, and 8 respectively, and therefore in geometrical ratio, it may be assumed that the succeeding difference will be in the same ratio, and therefore equal to 16 ; hence the further period of the original ratio will be $18+16=34$. From this the average velocity is found to be :–

$$21{\cdot}058 \times \frac{34}{18} = 39{\cdot}776 \text{ feet per second,}$$

and the velocity of the picking arm at the end of the 6th period of acceleration is therefore :—

$$\frac{21{\cdot}058 + 39{\cdot}776}{2} = 30{\cdot}417 \text{ feet per second.}$$

This velocity, however, is still considerably lower than the average velocity of the shuttle already determined at 35 feet per second, and is therefore necessarily less than the maximum velocity which the shuttle must attain. As pointed out in our First Edition, the picker in many cases travels 11 ins. while the arm travels 9 ins., this increase being due to the relative movements of the picking spindle and the picker, and the end of the picking arm. As the lay moves backwards, the spindle and picker are further

removed from the end of the picking arm as the latter is travelling towards the cloth, and hence an increased movement is imparted to the picker. It therefore follows that the velocity of the picker is considerably in excess of that of the picking arm. Then again, at this particular time the shuttle gets clear of the swell, and the pressure on the arm and straps is more or less removed, with the result that the arm springs forward a certain distance. All these conditions tend to increase that velocity which is a positive result of the mechanical movements of the wyper, cone and picking arm, but as we have not been able to bring our investigations in this direction to a mutually satisfactory conclusion we simply state that there seems to be no doubt that all further increase of velocity which it is necessary to impart to the picker and to the shuttle is obtained as a result of these relative movements of the picker and spindle, and to the elasticity of the picking arm and strap.

Underpick Motions.—A general idea of the ordinary underpick motion, or what is sometimes termed the lever pick, will be gathered from Figs. 179 and 180, which show respectively the side and front elevations of one of these motions as made by Messrs. Robert Hall and Sons (Bury) Limited. On the end of the wyper shaft A a boss or truck B is keyed, which carries, bolted in a concentric slot, the picking bowl C. This arrangement permits of the adjustment of the bowl C as to the time of action on the picking plate D as the shaft A revolves. The plate D is bolted to the horizontal picking lever E fulcrumed at F on a bracket bolted to the framework. Slots are sometimes provided in the plate D to permit of its vertical adjustment for regulating the strength of the pick, although this is usually done by raising or lowering the fulcrum F to the necessary extent. The end of the lever E is made to project over

the short arm G of the bracket H, to which is bolted the picking stick J, all moving about the fulcrum K. The extreme end of the lever E passes through and is guided

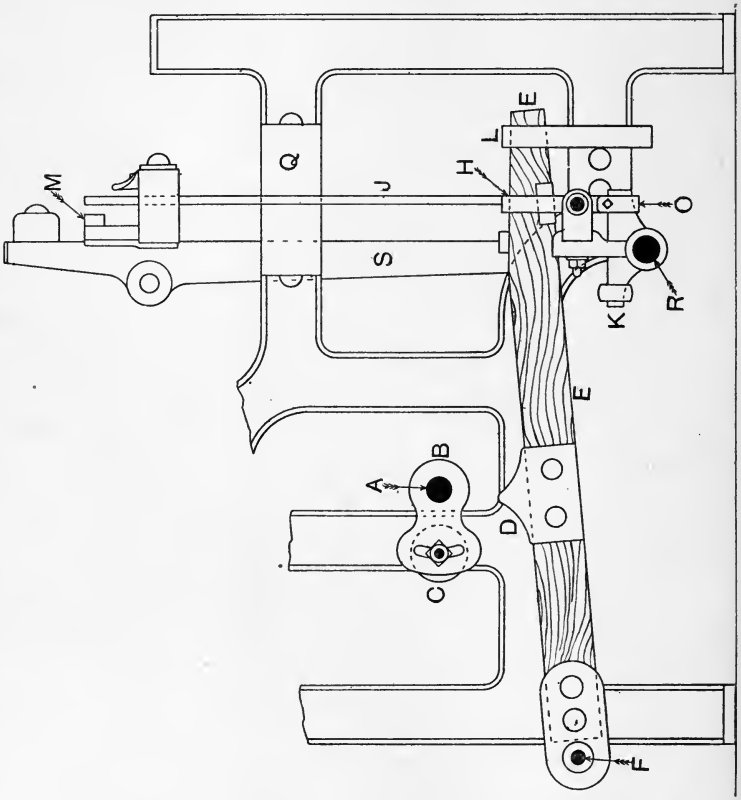

FIG. 179.

by a bracket or grate L. The bottom of the shuttle-box is slotted for the passage of the upper end of J, over which a leather or raw-hide picker is dropped and kept from rising from its position by a wooden slip M. The position

of rest or inaction is that shown in the figures, but it is obvious that as the shaft A revolves, the bowl C will depress the lever E, which in turn will force G downwards,

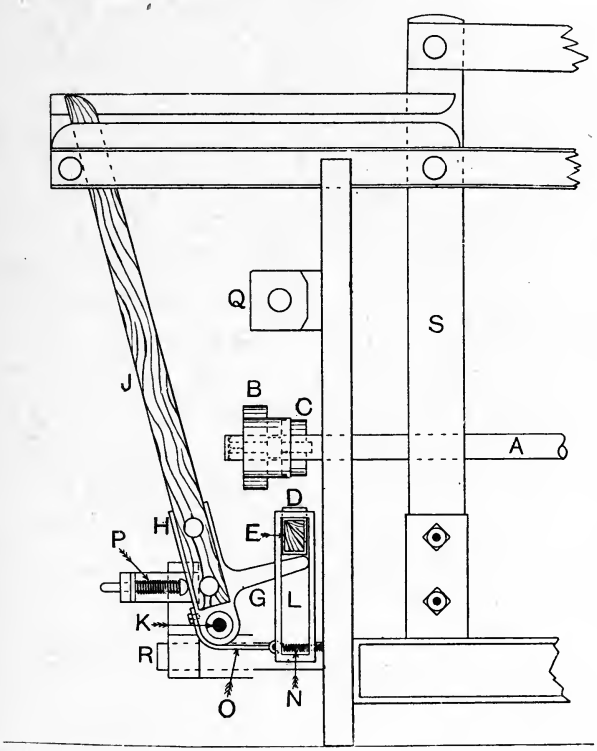

FIG. 180.

at the same time compelling the upper end of J to travel rapidly inwards, and thus propel the shuttle. The stick J is returned to the position shown by means of the spring N and the strap O attached to the bracket H. The spring

P serves as a buffer to J when the latter is returning. A buffer or check strap Q is also provided for the inward motion of J. The bracket H—and all that it supports—is keyed upon and rocks with the rocking shaft R in unison with the lay sword S. The character of the action of this picking motion and the acceleration of movement conveyed to the shuttle will, of course, depend upon the shape of the picking plate D, the proper curvature of which might be determined by a process somewhat analogous to that thoroughly gone into in the case of the cone overpick.

Underpick motions of this type have all the advantages of cleanliness to recommend them—a most desirable element in the production of some classes of linen goods, —and it is probably mostly due to this that the cone overpick has not entirely displaced them, as it has done in the case of jute weaving. Although possessing the above-named advantage, these motions are by no means perfect. The reader will easily see that, in common with all negative picking motions, the end of the picking stick describes an arc while moving, instead of travelling in a straight line, and the stick in this case being in direct communication with the picker, it follows that were it not for the presence of the guides the picker would move along the same path as the end of the stick. Notwithstanding the fact that the guides to a certain extent prevent this, the tendency is for the picker to rise as it approaches the centre of the box, and to fall as it moves towards either end, thus creating a certain amount of unnecessary friction between the picker and the top guide, and also between the picker and the stick, as the latter, in approaching the vertical position, forces its way through the slot in the former. There must of necessity be a certain amount of clearance to allow the picker to move from one end of the box to

the other, and consequently there always exists a slight tendency for the rear end of the shuttle to be depressed, and the forward end elevated, during the picking action. This in many cases results in the shuttle being thrown out, and especially is this so when the shuttle tip is pretty high. In any case, the motion of the shuttle partakes more or less of a wave-like movement instead of a steady transitional one.

Several methods of imparting a perfectly horizontal movement to the end of the picker stick have been tried, one of the latest being that of Messrs. Hollingworth and Knowles, represented in Fig. 181. Here the picking stick A passes as usual through the slot in the bottom of the box, and the picker may be either dropped over the end or fixed to the front of the stick. The lower end of the stick is fulcrumed at the end of lever B, which in turn has its fulcrum on the stud C (detached figure), the latter connecting the parts D and E, and the whole, together with the lay sword F, rocking on the shaft or pin G. The picking stick A is connected to the upper end of E by means of the link H. Motion is imparted to the stick from a bowl and picking shoe—to be described later—through the rocking shaft J, lever K, link L, and straps M. It is at once evident that since the part E is bolted firmly to D, the link H will gradually draw down the stick A as it passes from X or Y to the vertical position, thus imparting a horizontal movement to the picker, and of course to the shuttle. To make sure that the two extreme positions of the stick make equal angles with the vertical, a ready means of adjustment is provided between the parts D and E. A set-screw N passes through the lug at the upper end of D and abuts against the projecting piece O on the face of the part E; the upper end of E may thus be made to

move backwards or forwards as required. When once in proper position it is firmly bolted to D by the bolt S. The flat spring P rests on a projecting part of B and acts

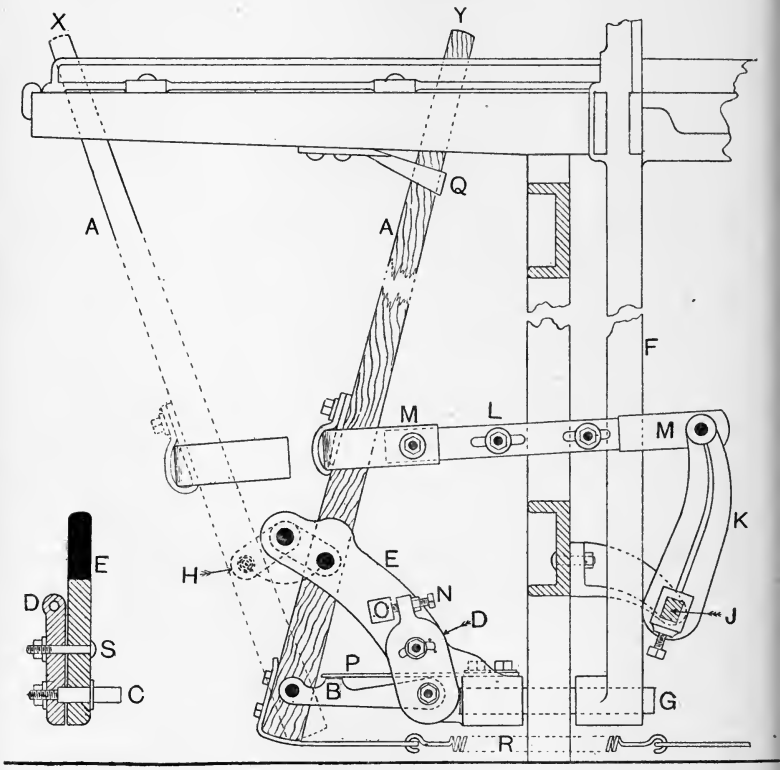

FIG. 181.

partly as a check to the incoming shuttle, and partly as a check to the forward motion of the picking stick. The strap Q performs a similar function when the stick reaches its extreme forward position. After the pick has been

delivered, the stick is returned to its normal position by the strap and spiral spring R, the end of which may be fixed to some convenient part of the loom or coupled with the corresponding spring for the opposite side.

Another method of obtaining the parallel motion of the picking stick is that illustrated in Fig. 182 (front elevation and plan). A is the rocking shaft or stud, upon which is set-screwed the bracket B. The picking stick C is secured to the rocking shoe D, the lower end of the stick and part E passing through a slot in B. A similar slot is made in D, through which passes the tongue F. Projecting from B is a bracket which supports the rotating shell G, inside of which is a strong helical spring, and on its periphery is fixed the connecting strap H. Immediately the picking stick reaches its vertical position the end J commences to rise, raising the picking stick bodily and counteracting the tendency of the head to fall. The shoe D thus acts as a kind of lever with its fulcrum about K, and causes the head of the picking stick C to move in a plane parallel to the race of the lay. After the pick has been delivered, the picking stick is returned to its normal position by means of the afore-mentioned spring inside the shell G. This motion is adopted in the Northrop automatic loom.

Underpicks similar to that illustrated in Figs. 179 and 180 may with little trouble be converted into the so-called pick-at-will motions, or motions which pick as desired from either end of the lay. Pick-at-will motions are, of course, fitted to those looms only which have either drop or revolving boxes at both sides, the "under" pick-at-will being fitted on drop box looms only. An "over" pick-at-will is suitable for either drop or revolving box looms. In certain cases special mechanisms are found by which a limited number of single picks are inserted,

but, in general, when it is necessary to insert single picks of one colour, a pick-at-will motion is essential. One of

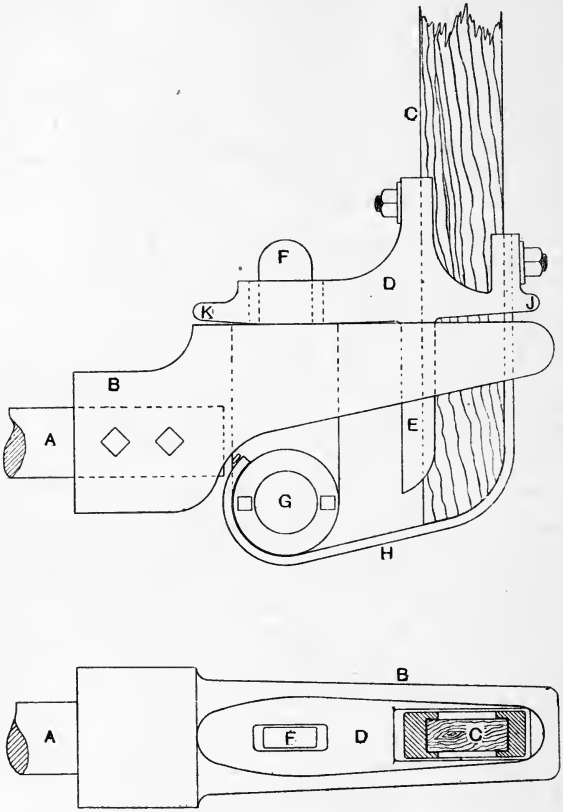

FIG. 182.

the simplest and at the same time most certain of these motions is that of Messrs. William Smith and Brothers Limited, Heywood, shown in Figs. 183, 184, and 185.

Here the picking plate or shoe A, instead of being a fixture on the horizontal lever B, is considerably lengthened and is supported on two brackets C and D, which are bolted to B. Near one end of A a hole is drilled to receive the fulcrum pin E, which also passes through and is set-screwed in the upper portion of bracket D. The plate A is prolonged behind pin E in order that both picking shoes, one at each side of the loom, may be connected together by rods F and studs G. This

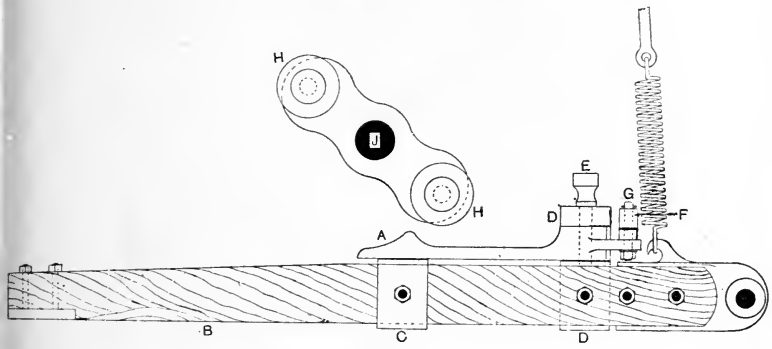

FIG. 183.

arrangement enables either shoe to be withdrawn at will from the vertical plane of action of the picking bowls H, two of which are fixed diametrically opposite each other at each end of the wyper shaft J (see Figs. 183 and 184, which show respectively elevation and plan of the arrangement). From the plan view it is seen that rod F, in absence of any other force, is controlled by a spiral spring K, fixed to the loom frame; this spring continually tends to place shoe A in position under the line of the picking bowls H and to withdraw shoe A^1. In Fig. 184 the opposite position is shown; this is obtained in the

following manner:—The elliptical cam L (see Figs. 184 and 185) is set-screwed on and rotates with the wyper

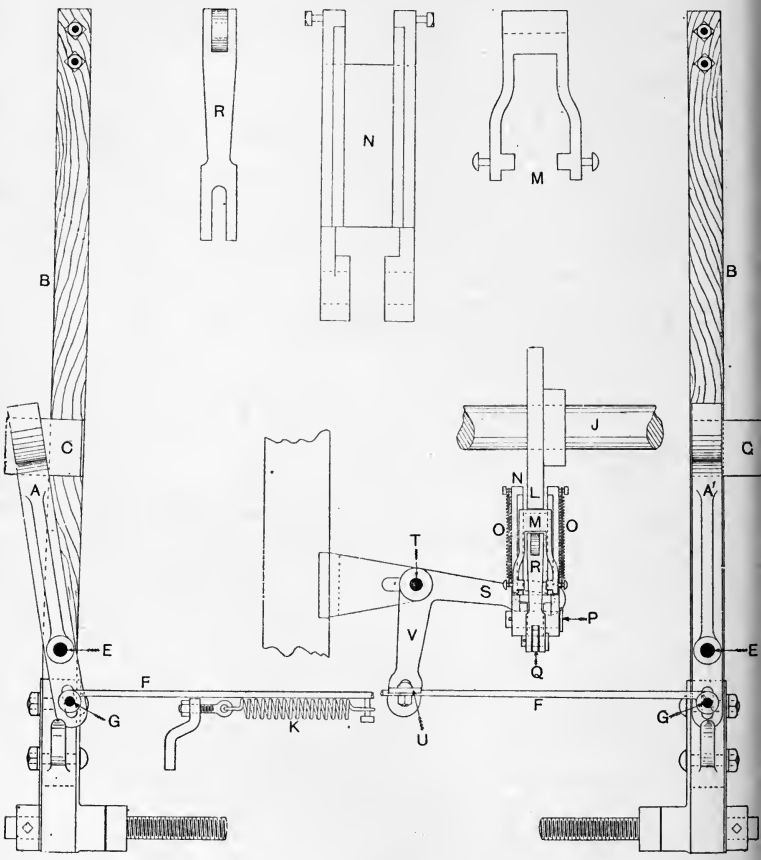

FIG. 184.

shaft J; twice, therefore, in each revolution of the wyper shaft, or once in each revolution of the crankshaft, this

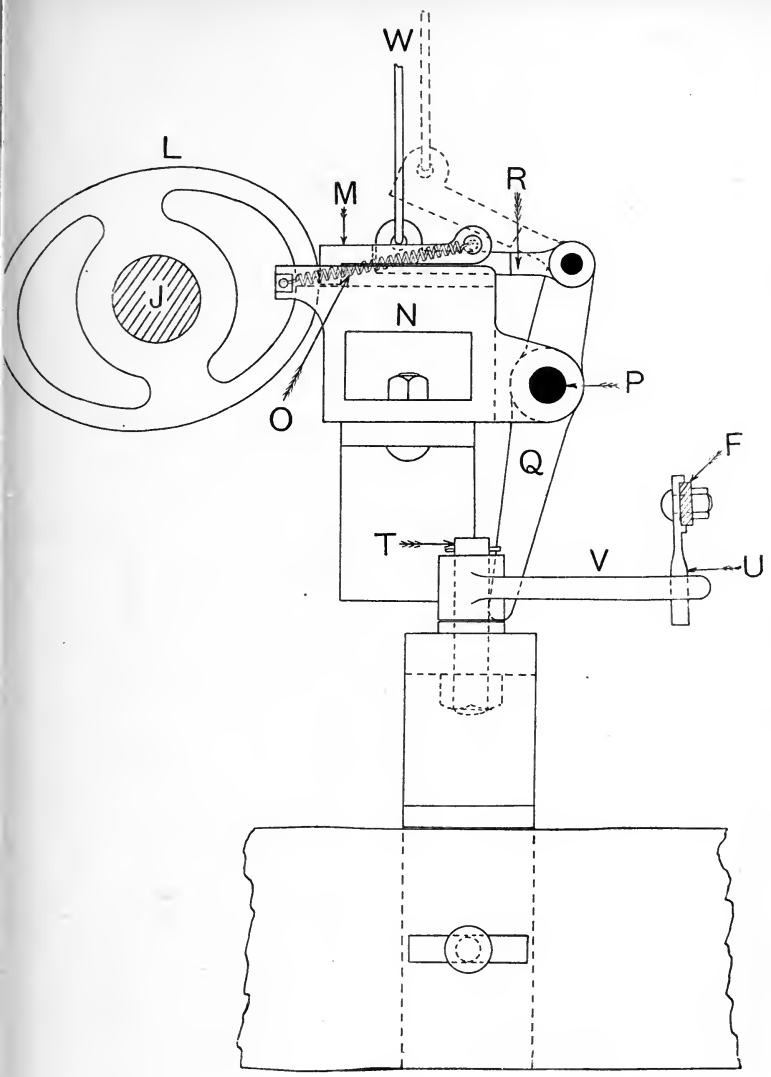

FIG. 185.

cam pushes outwards the sliding piece M (see detached view Fig. 184), supported on box N and kept in touch with the face of cam L by springs O. Fulcrumed at P in box N is a lever Q which carries at its upper end a hinged piece R, while its lower end enters the slot of arm S of a bell-crank lever fulcrumed at T. Finger U bolted to rod F projects into the slot of the arm V of the same lever, which thus controls the positions of the picking shoes A and A^1. The hinged piece R may be connected by wire W either to a hook of the dobby or the jacquard machine, or to one of the needles of the box motion. In any case R may be left down, for any pick, in the path of the sliding piece M, or raised clear of it as shown by the dotted position, when M passes freely underneath. Should R be interposed in the path of M it is pushed backwards as the latter advances, the upper arm of lever Q recedes, the lower arm advances, and bell-crank lever S V is rotated, taking with it finger U and rod F. Shoe A^1 is thus placed in position and shoe A withdrawn. If piece R be lifted out of the path of sliding piece M, spiral spring K places shoe A in position and withdraws shoe A^1.

Another, but particular, type of underpick motion is that found in the Hollingworth and Knowles loom, and illustrated in Figs. 186 and 187. From the latter figure—which shows a back elevation of the shuttle-box frame A—it will be seen that the picking stick B passes up entirely behind the box frame, but between the latter and the spindle C, which, along with a slot in the box frame, guides the picker D, the latter being thus held horizontally. The picking stick B is supported, as shown, by a pin in the bracket E secured to the rocking shaft, and is actuated by a strap F and link G from the picking arm

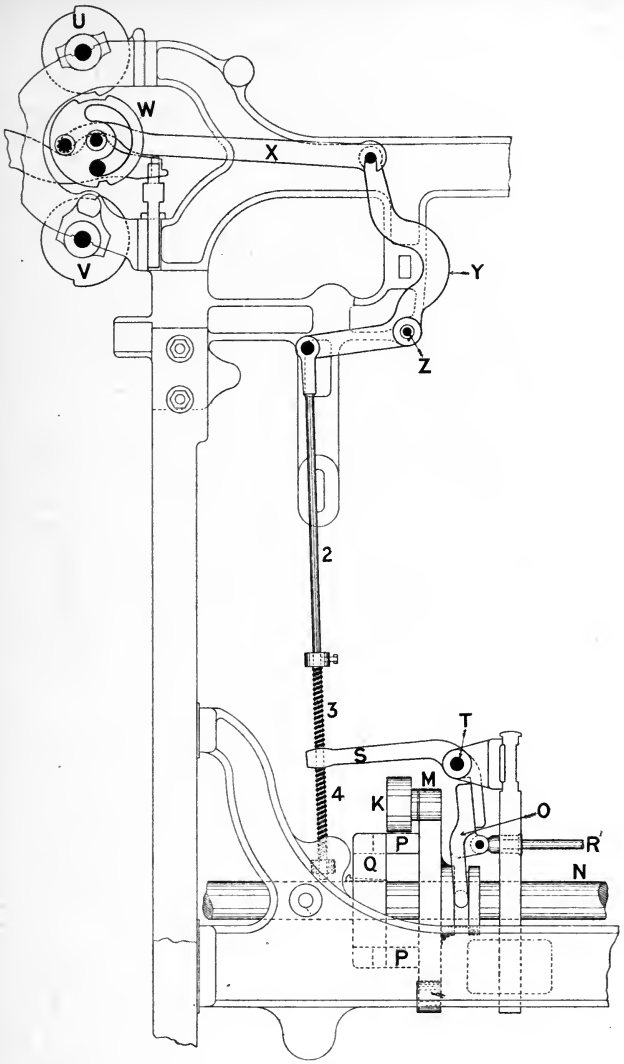

FIG. 186.

H set-screwed on the horizontal picking or rocking shaft J. This shaft J is caused to rock by the action of the picking bowl K on the picking shoe L, also set-screwed on the shaft J. (The picking shoe L is now made in two

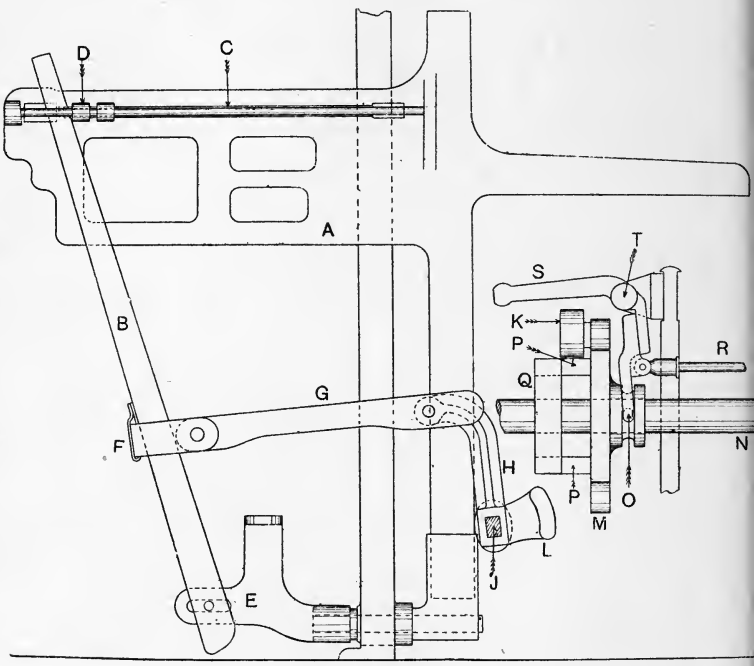

FIG. 187.

parts and bolted together, this arrangement permitting of the rapid replacement of a broken or worn shoe.) The bowl K is carried on a stud bolted in the plate M, the boss of which is extended along the wyper shaft N to form a clutch with the clutch fork O. The plate M is loose upon and may slide freely along the shaft N. The

pins P project from the face of the plate M into slots of the picking block Q keyed upon the wyper shaft, and thus keep the plate M and the bowl K rotating with Q.

From the position of the parts in the figures it is evident that as K revolves with the shaft N it passes clear of the picking shoe L. But it must be remembered that the shaft N in this loom revolves at the same speed as the crankshaft, and that at a corresponding position on the shaft N near the other side of the loom there is a similar arrangement of parts, all connected by the rod R and a similar clutch fork O, and that by means of this connection the plate M and bowl K at the other side are in such positions that as the shaft N revolves the bowl strikes the picking shoe, and the shuttle is propelled from the opposite end of the lay. So long as the parts remain in their present position the loom continues to pick from the same side. To bring about a change of position of the parts, and to bring the bowl K over the shoe L so that the loom will pick from the end shown, the bell-crank lever S fulcrumed at T is caused to act upon the clutch fork O; when this occurs plate M is moved towards the boss Q, while the corresponding plate at the opposite end is withdrawn. It is therefore obvious that by the movement of the lever S the loom may be caused to pick at will from either end. The method of actuating the lever S will be understood by reference to Fig. 186. U and V are the two fluted or toothed cylinders already referred to in connection with Figs. 117 to 124, and they impart motion to the gear wheel W and connecter X in the same manner as that indicated in connection with the figures mentioned. The connecter X is attached, as shown, to the vertical arm of the bell-crank lever Y fulcrumed at Z, the horizontal arm of this lever in turn being connected

by the rod 2 and springs 3 and 4 to the extremity of the lever S. By means of a small chain built of bowls and bushes, as required, which controls the movements of the box and picking levers, the picking bowl K may be brought at will into position over the picking shoe at either side of the loom.

Messrs. G. Hattersley and Sons' method of operating an over pick-at-will mechanism in connection with their revolving box motion is illustrated in Figs. 188 and 189. The former of these views shows an end elevation and part plan of the selecting and operating parts, while Fig. 189 shows a back elevation of the picking apparatus and connections. Eccentric A, Fig. 188, is mounted on the crankshaft B, and performs the usual functions of a similar eccentric in the revolving box motion, *i.e.*, it raises the bell crank levers C, and their pins D, clear of the card cylinder E, just before the latter commences to make a partial revolution; it then lowers the same parts so that the pins D may rest upon the card, or enter the cylinder E through the card, should the latter be cut for this purpose; these two motions take place every revolution of the crankshaft. Naturally, there are two similar levers C side by side, to correspond with, and to act upon, the two vertical hooks F F^1, which are connected to corresponding levers G G^1 fulcrumed on stud H. See also same parts in Fig. 189. Both hooks F F^1 pass through slots in the end of lever J, and are normally retained in the back position, see F^1, by means of springs K, so that the lever J may rise and fall without operating upon the hooks. The free ends of levers G G^1 are bent outwards sharply at right angles till they are about eight inches apart, see detached plan view, so that the extremity of each lever may enter a corresponding slot in the three-armed lever O fulcrumed on stud P, see Fig.

189. Should a card be perforated, and a pin D enter the cylinder E, the lower end of the corresponding lever C will press forward the head of the hook on which it operates

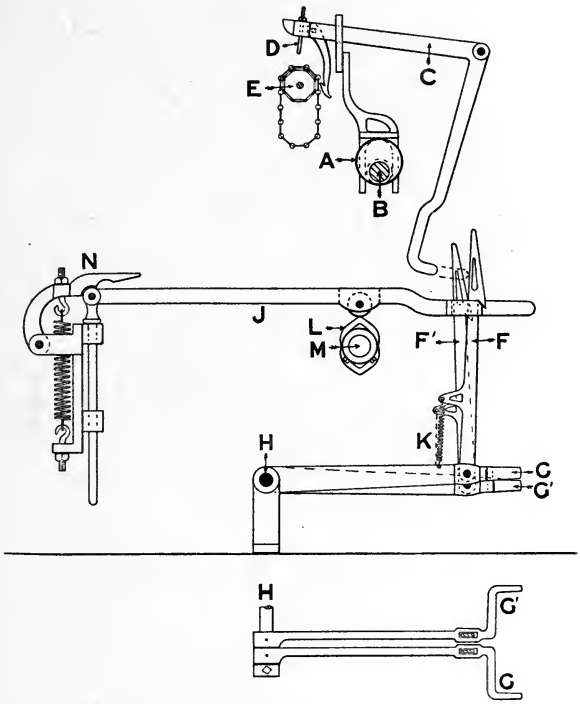

FIG. 188.

(see hook F in Fig. 188), with the result that as bent lever J rises, hook F and lever G will rise with it, and the vertical arm of lever O, Fig. 189, will be rocked to the right as shown. At the same time lever G^1 and hook F^1, Fig. 188 will descend in a corresponding degree. Now lever O, Fig.

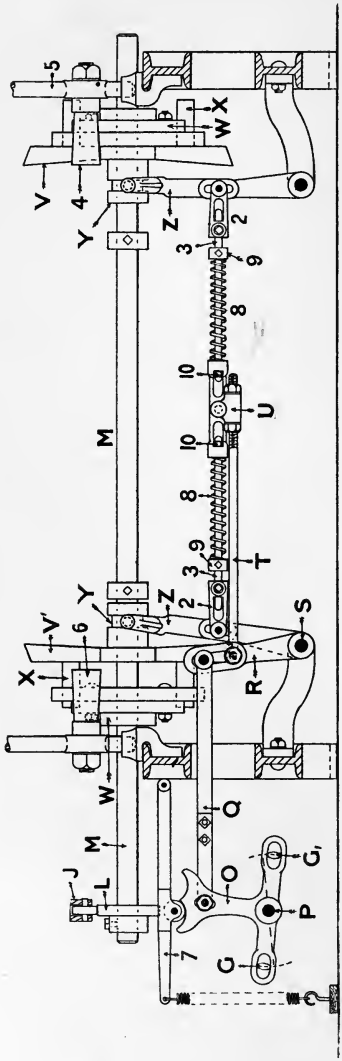

Fig. 189

189, is connected by arm Q to lever R, fulcrumed on stud S, and through lever R to rod T and coupling U, all of which necessarily move to the right with lever O. Picking plates V^1 and V are double-nosed as shown so that each may, if desired, act twice in one revolution of the wyper shaft M. Each picking boss or truck W is keyed to the wyper shaft, and controls its corresponding plate by means of rectangular slots and projections X, which are free to move in, but never entirely leave, the slots in the boss W. Each picking plate is free upon the wyper shaft, and is compounded with a clutch Y, which is in turn controlled by a clutch fork lever Z. Both levers Z are then so connected through couplings 2 and rods 3 to coupling U that, as the latter is moved to the right, picking plate V is moved hard into contact with its corresponding boss, while

plate V^1 is simultaneously removed from contact. In these positions it is evident that the pick will be delivered by V through cone 4 and shaft 5, and that cone 6 will remain undisturbed. Should lever G^1 be raised, however, all parts to the right of O will move to the left, and the pick will then be delivered from that side of the loom. Spring hammer 7 steadies lever O after it has changed to one or other of its extreme positions. The connections between the coupling U and the coupling 2 are so arranged that the closing of either picking plate upon its boss is accomplished through the medium of the strong helical spring 8 and collar 9, the former of which yields should there be any obstruction in the way of the plate closing. On the other hand, the plates are withdrawn positively by means of a set screw 10 in the extremity of each coupling rod 3. The revolving boxes are, of course, controlled in the usual manner, all six indicating levers C, Fig. 188, being mounted upon the same stud, and selected by the cards as the latter pass round the cylinder E.

CHAPTER XIV

BEATING UP

BEATING up, as the driving home of the weft thread by the reed is invariably termed, is generally considered as being one of the three chief actions in the operation of weaving. Of these actions, two—viz. shedding and picking—have already been discussed so far as they are generally found to apply in jute and linen weaving, whilst the third, which

is generally taken as following picking, now falls to be considered.

The mere act of beating up is in itself a simple matter, but under this heading it is usual to consider not only this single action, but in general the whole movement of the lay for one revolution of the crankshaft; and in particular to discuss the position of the centre of this shaft in relation to the parts which it actuates through the medium of the connecting arm—or, rather, the effect of such position and relationship.

Without entering into the history of the development of the present practically universal arrangement, which is illustrated in Fig. 190, we may state that the lay A, a heavy beam of well-seasoned wood, is supported on brackets cast upon the lay swords or arms B, and is bolted to the latter as shown. To the upper side of A a thin raceboard, also of wood, is fixed. In some cases a longitudinal groove is cut at the back of A to receive the lower rib of the reed C, whilst the upper rib is held in position by a heavy wooden or cast-iron cap D grooved on the underside and bolted at each end to the head of the swords B. In all looms for jute weaving, however, instead of the lay A being simply grooved to receive the lower rib of the reed, the latter is securely fixed to the lay by means of a special wooden clamp E, bolted to the lay at regular intervals by means of bolts F, which pass entirely through the lay. The swords B are centred upon the rocking shaft G, and are fixed to the latter by means of friction keys or set screws. In the majority of cases the shaft G extends from side to side of the loom, and is supported there either in a fixed position or in adjustable brackets. In some few cases the part of the rocking shaft is fulfilled by two short studs suitably supported at each side of the

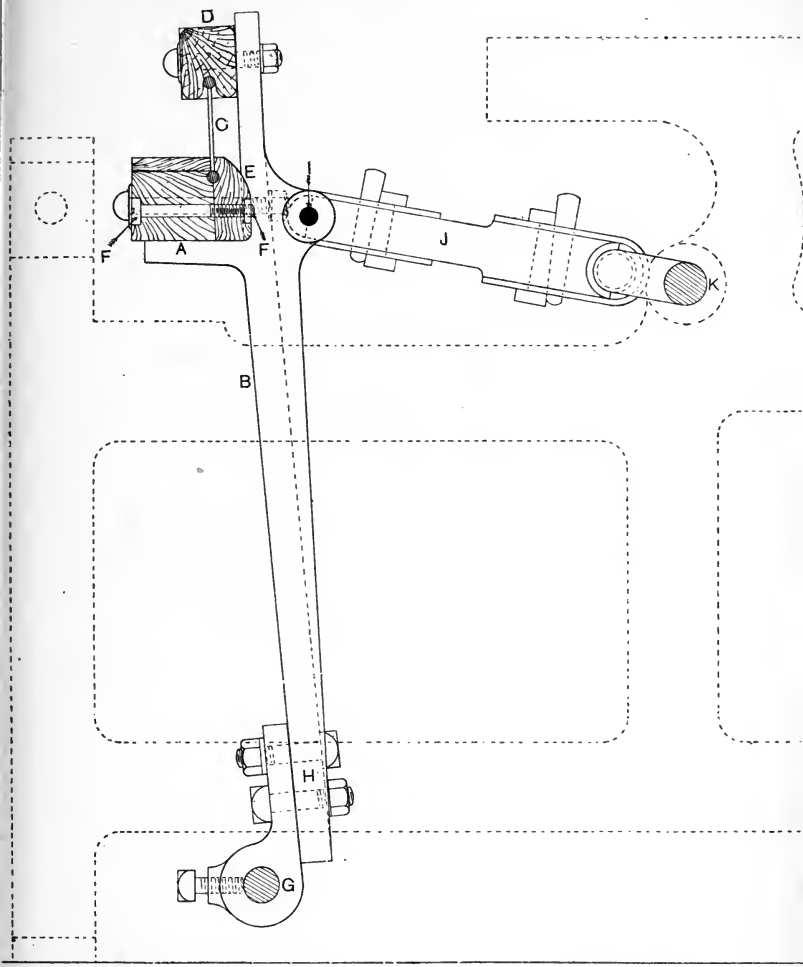

FIG. 190.

loom. In all looms for jute and coarse linen weaving the

swords B are practically in one piece from the rocking shaft up, and in these the lower shed line has to be adjusted to the level of the race ; but in looms for fine linens, and in general where harness work is anticipated, the swords are made in two portions, as at H, to permit, where necessary,

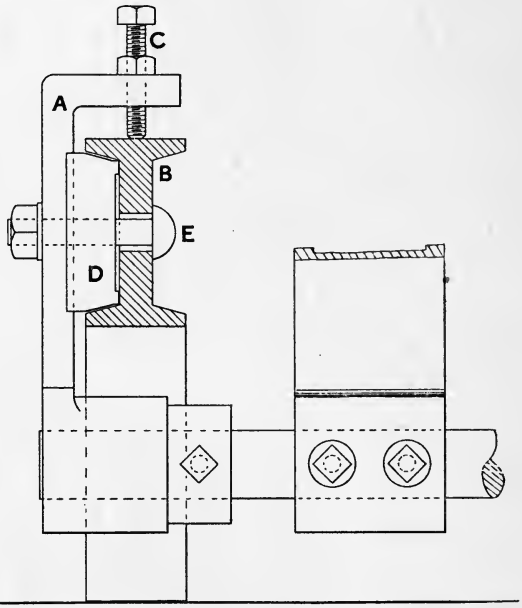

FIG. 191.

of the vertical adjustment of the race to the under shed line.

Another method by which the race of the lay may be adjusted to the proper height in harness looms is illustrated in Fig. 191. Besides being more simple, more easy of access, and more accurate than the former method, it also

permits of the swords being made in one part instead of two. In this method, the rocking-shaft bracket A is extended upwards, and turned inwards over the loom frame B, so that it may be tapped and provided with a set screw C, which abuts against the frame, and by which the height of the bracket and rocking shaft may be finely adjusted. A making-up piece D engages with the bracket A, keeps it clear of the frame B, and ensures that it will move vertically. After adjustment, the whole arrangement is bolted rigidly to the loom frame by the bolt E.

Swords B are usually of cast iron to ensure rigidity or stiffness in the support of the lay while the shuttle is travelling, as well as during the beating-up process; but the liability of such swords to snap under the sudden shock of "knocking off" and under the repeated blows, or rather stresses, of beating up is well known. To obviate this as much as possible, and to impart a greater amount of resilience or spring to that part of the mechanism, sword arms of ash or hickory with cast malleable iron supports have been recently introduced in looms for the manufacture of the heavier classes of linoleum backing cloths. In other cases the whole of the sword is of cast malleable iron, or cast steel in T or ⊓ section.

On the swords B, and usually at a point immediately behind the lower portion of the lay A, lugs are cast to receive the ends of the connecting pin I at the one end of the connecting arm J; the other end of this arm is connected to the crank or sweep of the crankshaft K. Connections between the arm J, the pin I, and the crankshaft are usually made by means of straps, gibs, and cotters, to permit of the correction of play caused by the wear and tear of the bushes on the crank and arm.

The three points, the relative positions of which more

immediately concern us, are the centres of the rocking shaft G, the connecting pin I, and the crankshaft K. It is almost needless to say to those who have any knowledge of the loom in detail that there are nearly as many positions for each of these three points as there are loom makers. Why this should be so is difficult to understand, unless we assume that loom makers have as yet not decided upon that relationship which should uniformly be adopted for a given type of loom, or that they have each decided upon a different relationship between these points as being the best.

As regards the relative position of the first two—that of the rocking shaft G and the pin I—it is now a generally accepted rule that the pin I shall not, in its forward movement, pass the vertical plane of the centre of the shaft G, and on this account the full forward position of the pin is usually found to be about $1\frac{1}{2}$ to 2 ins. behind this plane. In most narrow looms it is usual to find the lay at least 2 or 3 ins. in front of the connecting pin, and it is therefore evident that the great mass of the lay will, in moving forward, pass the vertical plane of the shaft G, and begin to fall. Nevertheless, the arrangement is almost universal, and is to be found working satisfactorily in looms of all widths up to 130-in. reed space. In wide looms, however, the connecting pin is frequently found at a much greater distance behind the lay, so as to permit shorter connecting arms being used in order to increase the eccentricity of the movement of the lay.

With regard to the lateral position of the rocking shaft being fixed or adjustable in any one loom, we are of the opinion that the former method is preferable, since, if due consideration be given to this position to begin with, there should never be any necessity to change it; and in looms

where it is fixed, the necessity never arises. Any alteration in this point invariably necessitates an alteration in the lift of the tongue of the warp protector, and sometimes in its length; it changes the inclination of the race of the lay to the shed line, necessitating an alteration in the raceboard or other parts, for no matter what the position of other things may be, the under shed line must be at the same inclination as the raceboard, and touching it during the passage of the shuttle. Another point in connection with the race worthy of attention is that it should never dip forward at any point when the shuttle is out of the box, otherwise it is clear that the tendency for the shuttle to fly out will be increased; indeed it should not dip forward at any point. A simple means of helping to prevent flying shuttles is to make the raceboard level from front to back when the lay is full forward. This arrangement gives a maximum dip of the race and of the under shed line when the lay is full back; but, to compensate for this, the back beam or rail over which the yarn passes may occupy a lower position than in the case of those looms where this arrangement does not hold good.

In proceeding to consider the relative positions of the connecting pin and the crankshaft, we would beg to point out that it has been usual in works on weaving to consider that the chord of the arc of travel of the connecting pin I is always twice the throw of the crank, or, in other words, the same length as the diameter of the crank circle, no matter what position the centre of the crankshaft occupies with relation to that of the connecting pin. This assumption is slightly inaccurate, and we now wish to draw the reader's attention to the fact that it is only when these two points bear a certain relationship, only when the centre of the crankshaft is in one definite position with relation to

the travel of the pin, that the assumption is correct. Any deviation from this position, either up or down (assuming the dimensions of the crank and connecting arm to remain constant), will result in an increase of travel being conveyed to the connecting pin I. Further, only when the position to which we refer is adhered to will exactly half a revolution of the crankshaft be occupied in the backward movement of pin I, and exactly half a revolution in the forward movement.

Before proceeding further, let us make our position clear as to the direction in which the crank revolves. In practically all looms for jute weaving, and in a number of those for flax canvas and coarse linens, the crank revolves so as to beat up when rising, or to pick on the top centre as already indicated in Fig. 58 (page 114), whilst in nearly all other looms, the most noteworthy exceptions being those for Brussels and Wilton carpets, and the Hollingworth and Knowles' and similar looms for woollen goods, as well as other looms of American origin, the crank revolves so as to beat up when falling, or to pick about the bottom centre, as indicated in Fig. 59 (page 115). In the further explanation of this point we shall assume that the crank revolves as indicated by the latter method. Generally speaking, therefore, any explanation with regard to the points under discussion will require to be applied conversely if intended to be read in connection with the former method of rotation.

To raise the crankshaft above the position which we shall shortly define will increase the time taken in the backward movement of the pin, and therefore of the lay. It will also correspondingly decrease the time taken in the forward movement. To lower the shaft below the position indicated will have exactly the opposite effect—*i.e.*, will

decrease the time taken in the backward movement, and correspondingly increase the time taken in the forward movement.

In order that the travel of the connecting pin may be

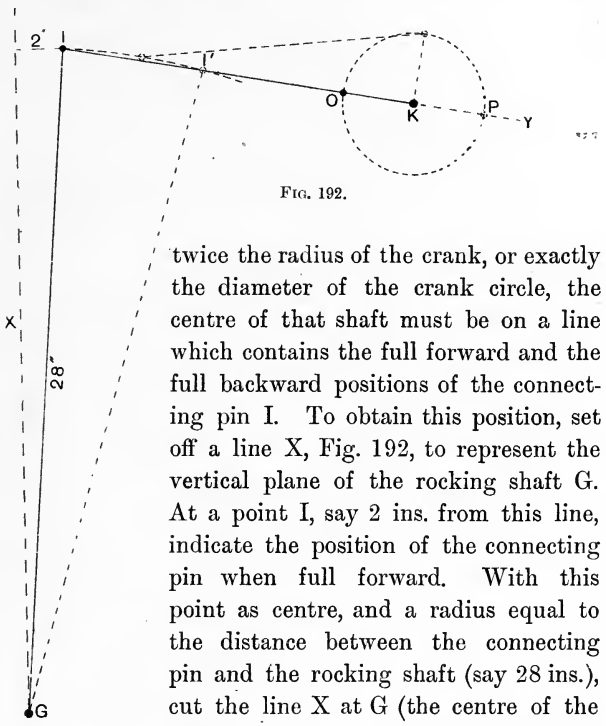

FIG. 192.

twice the radius of the crank, or exactly the diameter of the crank circle, the centre of that shaft must be on a line which contains the full forward and the full backward positions of the connecting pin I. To obtain this position, set off a line X, Fig. 192, to represent the vertical plane of the rocking shaft G. At a point I, say 2 ins. from this line, indicate the position of the connecting pin when full forward. With this point as centre, and a radius equal to the distance between the connecting pin and the rocking shaft (say 28 ins.), cut the line X at G (the centre of the rocking shaft). With G as centre and radius G I, describe an arc. Cut off I to I^1 (6 ins.) equal to twice the radius of the crank. From I, and passing through I^1, draw the line I Y. With I as centre and radius equal to the length of the connecting arm (12 ins.), plus the radius of the crank (3 ins.)—*i.e.*, with a radius of 15 ins.,—

cut the line I Y at K, then K is the centre of the crank-shaft.

From the method of construction it is evident that the pin I will be farthest forward when the crank is at the point O on the crank circle, since at that point the crank and the arm are in one straight line. It is also evident that the pin I will be full back at I^1 when the crank is at the point P on the circle, since at this point the crank and the arm coincide; but as these two points (O and P) are diametrically opposite to each other on the crank circle, or 180° apart, it follows that the chord of the arc I I^1 will be exactly the diameter of that circle, and that exactly one-half of a revolution of the crank will cause the pin to travel backwards from I to I^1, and that the other half will move it forwards from I^1 to I. Although the pin I moves through the part of a circle, the effect of such movement is for all practical purposes along the chord of the arc described—*i.e.*, along the line I Y.

It now remains to discuss the eccentricity of this movement, the term eccentricity being invariably used to indicate the varying velocity of the pin as it travels between its two extreme positions I and I^1. Generally speaking, the eccentricity or variation of velocity, which is not only unavoidable, but is really necessary, is due to the fact that it is the conversion of a circular motion into a rectilinear motion by means of a crank and a finite connecting rod. Were the connecting rod of infinite length, the movement of the pin for a given angle of the crank's rotation from the line I Y would in all cases be the versed sine of that angle, or, in other words, the whole movement would be that of a simple harmonic motion. As a matter of fact, however, the connecting arms are comparatively short, usually varying in length from two to six times the radius of the crank,

or from 8 ins. to 14 ins. long, with cranks of from 4 ins. to 2 ins. radius. It is due, therefore, to the fact that the motion to the pin is imparted through a connecting arm of finite and in some cases relatively short length that this eccentricity of velocity is increased in a great measure to the benefit of the weaving process, particularly that of the time allowed for the passage of the shuttle through the shed. As the crank revolves from the position indicated by the point O, the connecting arm assumes a position more or less inclined to the line I Y, and is thus, as it were, reduced in its effective length. The angle of inclination increases until an angle of 90° has been traversed by the crank, at which time the pin I (due to the oblique position of the connecting arm) will have covered a distance considerably more than the versed sine of that angle—*i.e.*, will have travelled more than the radius of the crank. Beyond 90° the angle of inclination becomes gradually less, or the effective length of the arm gradually increases until point P is reached, or when 180° have been traversed, when the arm again coincides with the line I Y. Then the full travel of the pin will be, as already stated, equal to the diameter of the crank circle. It is therefore obvious that if during the first 90° of the revolution the pin travels more than half the diameter of the circle it must travel less than half the diameter of the circle by a similar amount during the second 90° of revolution; and it follows that a similar but opposite action will take place during the further 180° of the full revolution of the crankshaft.

The actual amount of travel of the connecting pin for any angle of the crank's movement may be calculated by the following formulæ, and the use of a table of natural sines. The problem is in reality the solution of a triangle of which two sides (the crank and the connecting arm) and

the angle opposite one of them (that angle opposite the connecting arm) are known.

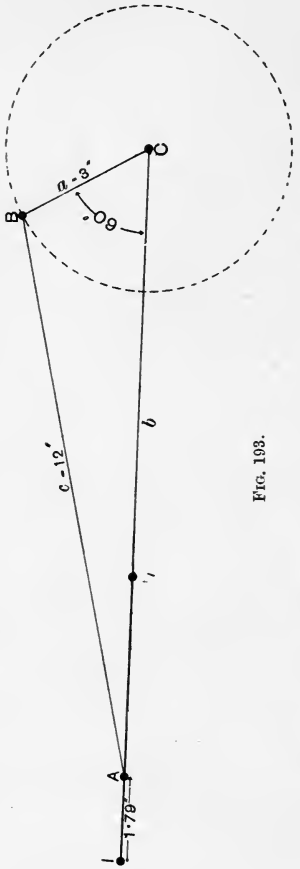

FIG. 193.

In the triangle A B C (Fig. 193) we shall assume the letters A, B, C to represent the angles at the points mentioned above, and the small letters *a*, *b*, *c* to indicate the measurement of the sides opposite the respective angles A, B, C. Thus A = the angle made by the connecting arm ($c = 12$ ins.) with the line I Y when the crank ($a = 3$ ins.) has rotated through the angle C (say 60°), traversing the pin from I to A. The line I C will of course be equal to the crank plus the connecting arm—*i.e.*, $3 + 12 = 15$ ins.,—and the distance travelled by the pin will be 15 ins. minus the length of the line A C (or *b*), which has to be found. Given the angle C and the two sides *a* and *c*, we must first find the value of the angle A. Now the sides of any triangle are proportional to the sines of the opposite angles—*i.e.*,

$$\frac{a}{\sin A} = \frac{b}{\sin B} = \frac{c}{\sin C}.$$

$$\therefore \frac{a}{\sin A} = \frac{c}{\sin C}.$$

and $$\sin A \times c = \sin C \times a\ ;$$

whence $$\sin A = \frac{\sin C \times a}{c}.$$

Substituting the known values in the right-hand side of the equation we obtain—

$$\sin A = \frac{0{\cdot}866 \times 3 \text{ ins.}}{12 \text{ ins.}}$$
$$= 0{\cdot}2165 \text{ of an inch,}$$

which is the sine of an angle of $12\frac{1}{2}°$; hence the angle $A = 12\frac{1}{2}°$. The sum of the three angles of any triangle equals 180°.

$$\therefore \text{angle B} = 180° - (\text{angle A} + \text{angle C})$$
$$= 180° - (60° + 12\tfrac{1}{2}°)$$
$$= 107\tfrac{1}{2}°\ ;$$

and since the sine of an angle is equal to the sine of its supplement—

$$\therefore \sin 107\tfrac{1}{2}° = \sin (180° - 107\tfrac{1}{2}°)$$
$$= \sin 72\tfrac{1}{2}°$$

and $$\sin 72\tfrac{1}{2}° = 0{\cdot}9537.$$

But by above $$\frac{b}{\sin B} = \frac{c}{\sin C}\ ;$$

hence $$b = \frac{\sin B \times c}{\sin C}.$$

Again substituting, we have—

$$b = \frac{0{\cdot}9537 \times 12 \text{ ins.}}{0{\cdot}8660}$$
$$= 13{\cdot}215 \text{ ins.}$$

The same result may be obtained, after having found the angle B, as follows :—

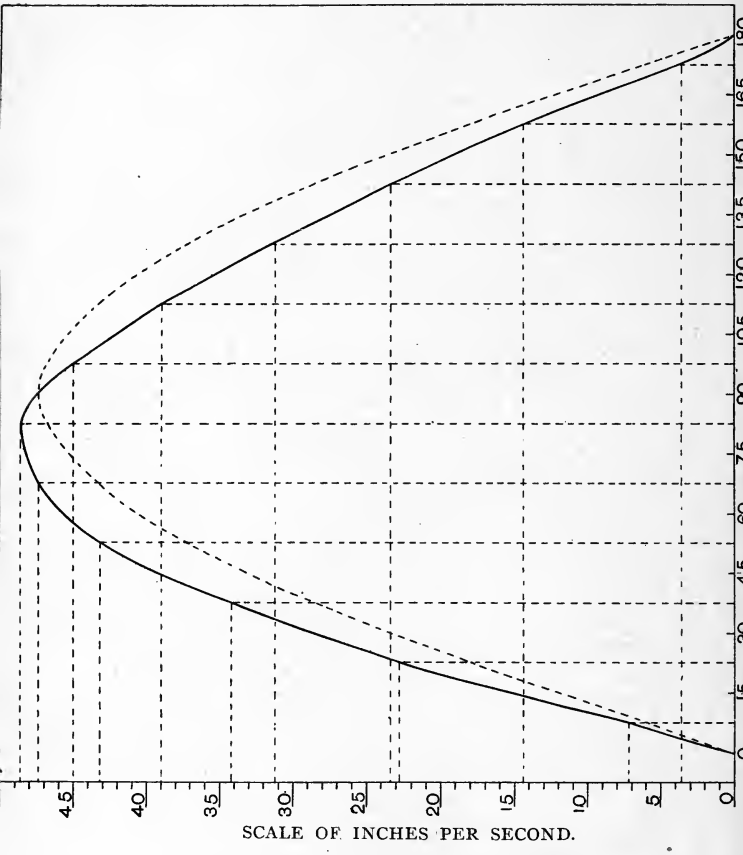

FIG. 194.

$$b^2 = a^2 + c^2 - 2 \times ac \times \cos B$$
$$= 3^2 + 12^2 - 2 \times 3 \times 12 \times \cos 107\tfrac{1}{2}^\circ$$
$$= 9 + 144 + 21{\cdot}6504$$
$$= 174{\cdot}6504$$

hence $b = \pm 13{\cdot}215$ ins.
Then 15 ins. $- 13{\cdot}215$ ins. $= 1{\cdot}785$ ins.

as the amount of travel conveyed to the pin I for 60° of the crank's movement.

In a similar manner the travel of pin I may be calculated for any number of degrees of the crank's rotation. In the following table, which has been calculated in the above manner, we give the travel of the pin I for every 15° of the crank's rotation in one direction—*i.e.*, going backwards; when going forwards a similar but opposite movement will result. We have assumed the crank to be making 150 revolutions per minute, and have included in the table the average velocity of the pin over these different periods. We have also, for comparison, included the average velocities which would obtain in the case of a simple harmonic motion, or with a connecting arm of infinite length; this, to show the difference of effect produced in approximately extreme cases.

In Fig. 194 two curves are plotted out which show graphically the important results noted in the above table, and indicate clearly the eccentricity of the velocity of the pin under ordinary circumstances. The curve in the solid lines shows the actual velocity, while that in dotted lines shows the harmonic motion.

It is of course evident that the actual velocity will change with the speed of the loom; but given the same crank and connecting arm, and provided the centre of the crankshaft remains in the position indicated, the eccentricity of the velocity will not vary.

[TABLE.

Movement of Crank in Degrees.	Total Travel in Inches of Pin I.	Actual Travel in Inches for Period of 15°.	Time for 15°: $\frac{60 \text{ secs.}}{150 \text{ pks.}} \times \frac{15}{360}$.	Average Velocity in Inches per Second for 15°.	Average Velocity in the Case of Harmonic Motion.
15	0·12	0·12	$\frac{1}{60}$ of a second.	7·2	6·0
30	0·50	0·38	,,	22·8	18·0
45	1·07	0·57	,,	34·2	28·6
60	1·79	0·72	,,	43·2	37·2
75	2·58	0·79	,,	47·4	43·4
90	3·39	0·81	,,	48·6	46·8
105	4·14	0·75	,,	45·0	46·8
120	4·79	0·65	,,	39·0	43·4
135	5·31	0·52	,,	31·2	37·2
150	5·70	0·39	,,	23·4	28·6
165	5·94	0·24	,,	14·4	18·0
180	6·00	0·06	,,	3·6	6·0

Variation of the eccentricity, or, as it might fitly be termed, the ratio of acceleration and retardation of the pin's movement, can only be obtained by changing the length of the connecting arm or the radius of the crank, or by altering the relative position of the crank and connecting arm from that indicated in Fig. 192. By increasing the length of the arm the ratio of acceleration will be reduced—that is, the acceleration will more nearly approach a harmonic one,—while by reducing the length of the arm the ratio will be increased. Similar results will be obtained by decreasing or increasing respectively the radius of the crank. It is therefore evident that in changing any one loom an increase of the crank will not be accompanied by an increase of the arm, but by a retention of the same arm or the introduction of a shorter one. It is also obvious that an increase in the length of the crank will not only affect the eccentricity of the pin's movement, but will also increase its travel. In some instances the latter point only

is aimed at, chiefly in cases where a shuttle of larger cross section is to be used; but in general an increase of the crank's radius is accompanied by a reduction of the length of the arm. Where it becomes necessary to reduce the length of the arm it is usual, as already indicated, to cast ears of sufficient dimensions on the back of the lay swords, in order that the lay and reed may be retained in their original positions when full forward; but in order to retain the relative positions of the crank and connecting pin I, the centre of the pin must still be retained on the line I Y (Fig. 192), although at the necessary distance nearer the centre of the crankshaft. The centre of the rocking shaft must be moved backwards a corresponding distance on a line drawn parallel to the line I Y, and by adopting this method the relative positions of all three points remain unchanged. Should it be necessary to increase the radius of the crank as well as to reduce the length of the arm, the new position of the pin when full forward must still be on the line I Y at a point whose distance from the centre of the crankshaft is equal to the new radius of the crank plus the length of the new arm. The new position of the rocking shaft will now be farther back than the original position on the line parallel to I Y by a distance equal to the difference between the length of the original crank and arm and the new crank and arm, plus the increase in the radius of the crank—*e.g.*, given the original crank and arm = 3 + 12 = 15 ins.; the new crank and arm = 4 + 8 = 12 ins.; the new position of the rocking shaft will be (15 − 12) + (4 − 3) = 3 + 1 = 4 ins. back from the old position on a line parallel to I Y.

In the numerical example it is evident that in the new position, the pin—when full forward—will be nearer the vertical plane of the rocking-shaft centre by the increase

in the radius of the crank, but if the original position be chosen 2 ins. behind the vertical plane, it is evident that the radius of the crank may be increased by 2 ins. before this plane is reached.

Various alterations due to a change of position of the rocking shaft have already been indicated, but this change of position, while retaining the lay in approximately the same position, may result in the race of the lay being caused to dip forward too much, and for reasons already indicated care must be taken not to overdo this.

We should now like to draw attention to the fact that it has been usual to believe that for the beating up of the weft a smart blow of the lay or reed is necessary, and that for the passage of the shuttle a protracted movement is desirable. We are entirely in accord with the latter opinion, but as regards the former we should like to make a few observations. Firstly, in the great majority of cloths it might be doubted whether the actual beating up of the weft is necessary. We think it is not, and that the action simply consists of placing it in position. Nothing really of the nature of a blow takes place—nothing but a pushing forward of the weft by the reed; and not only is this the case, but the pushing forward comes on gradually. If the loom is in proper order, the moving shuttle enters the box before the lay is half-way forward, and therefore the reed and the weft are in contact long before the cloth is reached. Under these circumstances we think it scarcely correct to speak of the lay as travelling forward at a high velocity, and imparting a heavy blow to the weft thread at the fell of the cloth; nor do we think it possible for the reed to do this with the ordinary type of crank and connecting arm. In some few exceptional cases it may be an

advantage to have an increased speed of the reed as it approaches the cloth, but in most cases it is undesirable. It must be remembered that the lay, when travelling, is, unlike the shuttle, not a free agent; that it is governed by the crank; and that as it approaches the full forward point it is rapidly decreasing in velocity until it ultimately comes to a dead stop, and then begins to recede. Anything, therefore, of the semblance of a blow which it does impart is due to the thickness and the hardness of the weft and the opposition which it may offer to the forward motion of the reed, together with the resistance of the warp when the fell of the cloth is reached.

In negative uptake looms we admit that all the movement which the uptake motion can make is due to the pressure which the reed imparts to the fell of the cloth as it approaches, and when it reaches, the full forward position. But this, we hold, will be more efficiently performed, and will be easier upon the loom and the warp, if done slowly rather than rapidly. In positive uptake looms, where the motion is actuated by a pawl and ratchet (and this type forms the majority), the uptake motion acts either when the lay is receding or advancing, and therefore between the recurrence of the beating up; this statement naturally ignores the comparatively few looms in which the uptake motion is either continuous, or is intermittently actuated from the wyper shaft, and therefore only every second pick. If, therefore, the reed, when full forward, has pressed home the weft thread, that thread will (in virtue of the uptake motion) have moved forward a distance equal at least to its own diameter plus a small fraction (depending upon the weave and other considerations) before the reed again approaches to place in position the next shot of weft. We are well aware

that with certain shedding mechanisms, and some classes of weaves, the fell of the cloth does not occupy a constant position, but surges backwards and forwards less or more with every advance and retreat of the lay and the formation of the new shed. In one extreme case observed in this connection the actual movement was $\frac{1}{16}^{5}$" every time the lay pressed against the weft, but the movement was far from desirable, was unnecessary for the proper production of the cloth, and was indeed only practicable in that particular case by using the best of warp yarns. In such a case beating up is certainly of the nature of a shock or blow, because the reed and weft are in contact comparatively early, but it cannot be contended that such a shock is productive of good either to the warp yarn or to the cloth produced. In by far the majority of fabrics no such movement takes place to any great extent, although something analogous is observable in $\frac{1}{1}$ plain weaving due to the slackness of the warp in the upper part of the shed. On this account the last two or three picks inserted in a plain cloth are not really incorporated in the fabric until a pick or two later in the weaving process, but are simply bunched up at the fell of the cloth, over and under it, as the reed comes forward. These threads are partially withdrawn as the reed recedes, to be again pressed into position on its return. But the resistance offered by them to the advance of the reed is more or less elastic; it is indeed a frictional resistance generated between them and the part of the warp under tension, and is distinctly most readily and gently overcome by a relatively slow movement of the reed. Let us, however, assume that the uptake motion has not acted, and that when the reed comes forward a second time the first weft thread is in exactly the position in which it was

left by the reed when forward the first time; then the distance through which the reed will require to move the cloth (assuming it to be a plain weave) will be approximately the diameter of the weft thread plus the diameter of the warp thread. These we shall assume to be 8 lb. jute (equal to 6 lea flax), with an approximately equal diameter of $\frac{1}{32}$ in. each. The maximum distance, then, through which the reed actually forces the cloth is $\frac{1}{32}+\frac{1}{32}=\frac{1}{16}$ in.; or the velocity at which the reed is travelling when it meets the cloth will be its velocity when at a point $\frac{1}{16}$ in. from the full forward point of its travel. In order to calculate this velocity accurately, we should trace the motion from the reed to the connecting pin, since the latter, being nearer the centre of motion (the rocking shaft), will receive a correspondingly reduced movement. It would be also necessary, however, after having found the velocity of the pin, to increase it proportionately again to the reed. To avoid this complication, we shall assume the motion at the reed to be that conveyed to the pin, and that the pin I, Fig. 190, is $\frac{1}{16}$ in. back from the full forward position when the reed and the cloth come into contact. Due to the fact that the acceleration of the pin is not uniform, it is a difficult matter to determine its actual velocity at any one point; we shall assume, therefore, that it is uniformly but negatively accelerated during the last 15 degrees of the crank's revolution before reaching the full forward point, and that the average velocity of the pin during that time will be its actual velocity at the middle position. But from the table already given we find that for 15 degrees of rotation from the full forward point the pin travels 0·12 in.—practically $\frac{1}{8}$ in.,—and that its average speed during that time (if the crankshaft be making 150

revolutions per minute with a 3-in. crank and a 12-in. connecting arm) is 7·2 ins. per second. This, therefore, according to our assumption—which, due to the acceleration not being uniform, acts adversely towards our contention rather than otherwise—is the actual speed of the pin when at a point $\frac{1}{16}$ in. back from the full forward position—namely, 7·2 ins. per second, less than half a mile per hour: rather a low velocity with which to impart a smart blow.

If, therefore, we cannot consider the lay as a free agent striking against the weft and cloth at a certain high velocity with a definite store of kinetic energy, we must search for another solution of the problem, and the matter seems to us to be rather a question of overcoming a certain resistance (that offered by the friction generated between the warp and the weft threads) by a given uniform force. Now, it is a well-known law in mechanics that if resistance be overcome slowly, less power is developed than if it be overcome rapidly; in other words, that power developed is proportional to the rate at which the resistance is overcome or inversely proportional to the time taken. We therefore hold that a slowly-moving lay, having a uniform force actuating it, is capable of overcoming a given resistance more easily than a quickly-moving lay with the same force actuating it. From this point of view, then, as well as from that of the fact that the warp will bear the strain of beating up better if it is brought on gradually rather than suddenly, we consider that a slow movement when nearing the full forward position is, in most cases, more of a benefit than otherwise.

One point in beating up which is probably of more importance than the speed of the reed, is its rigidity or

stiffness, and this more especially in wide looms. To obtain this rigidity in these looms it is a common practice to make cap D, Fig. 190 (page 357), when of wood, of great breadth; yet notwithstanding this increase of breadth it is not unusual to see the cap bending in the centre like a bow, if the work be anything heavy. In certain classes of work this exceptional breadth of the cap is objected to because of the light it obstructs and the shadow it throws on the yarn in the shed, and on this account cast-iron caps of smaller cross section, but of great rigidity, are often used. For similar reasons it is not unusual to find the lay stiffened underneath or at the back by the addition of an angle or a T iron bar.

After considering the foregoing contentions, therefore, it seems that any change of the length of the connecting arm, of the radius of the crank, or of the position of the crankshaft itself, having for its intention the modification of the eccentricity of the lay's movement in regard to beating up, should be with the object of decreasing rather than increasing its speed when nearing the full forward position.

It is not, however, from the point of view of beating up that the eccentricity of the lay's movement should chiefly concern us, but rather from that of the time allowed for the passage of the shuttle, or the portion of a revolution of the crankshaft which is occupied in moving the connecting pin from a given point on the line of its travel (that point at which time the shuttle just enters the shed, or when the pick is fully developed) backwards to the full back position, and forward again to the same point, at which time the shuttle should leave the shed. This is an object of importance even in tappet looms, where, in general, any amount of dwell can be given to the shedding wyper, and

the shed therefore retained in the full open position for any reasonable degree of time; but more especially is it of importance in looms in which the shed is formed by a jacquard or a dobby machine, where the only approach to a dwell in the shed is that imparted as the actuating crank passes the dead centres of its revolution. In order to obtain the greatest advantage of this semi-dwell, the cranks which operate the dobby or jacquard should be so set that they will be on the dead centre, with the shed full open, when the connecting pin I is at the full back position, or when the crank and the connecting arm coincide. The best results will be obtained when the picking is so timed that the shuttle will be in the centre or slightly beyond the centre of its travel from box to box at the same time. By adopting this arrangement, and assuming that the shuttle takes the same time to travel to and from the centre of the shed, we shall have the reed, when the shuttle leaves the shed, at exactly the same position as it was at when the shuttle entered the shed, and a maximum opening of the shed will therefore be presented to the shuttle at both times.

As already indicated (page 324), the maximum amount, *i.e.*, 140° of the crank's revolution, is sometimes occupied by the shuttle in passing across the lay from the time the pick is fully developed until the shuttle is dead in the opposite box. If from this we deduct 20 degrees as being the time taken in coming to rest in the box, we are left with 120 degrees as the time during which the shuttle is in the shed. Now we think it will be generally conceded that it is not desirable to impart any greater travel to the connecting pin I, and, therefore, to the race, than is necessary or is intended (*i.e.*, the diameter of the crank circle); also that it is desirable, as already indicated, that

during the passage of the shuttle the pin I, and, therefore, the lay, shall be as far back as possible, presenting to the shuttle during that time a maximum opening of the shed; and that the travel backwards of the pin I during the 60 degrees of the revolution of the crank immediately preceding the full back position of the pin, shall be exactly the same as that forwards during the 60 degrees immediately succeeding this position.

In order, therefore, to fulfil these two conditions—viz. to ensure that the travel of the pin will be no more than that intended, or that it be exactly the diameter of the crank circle, and that the lay will be as far back as possible during the passage of the shuttle—we would submit that only one relative position of the crankshaft K and the connecting pin I—that position which we have indicated—is possible. In Fig. 196, the original of which was drawn full size in order to avoid inaccuracy, and which has been introduced in proof of our contention that any deviation from the relative position shown in Fig. 192 will result in an increase of travel to the pin I, the position we have already indicated is shown in solid lines, while two other positions, chosen 3 ins. above and 3 ins. under the first position, are shown respectively in dot and dash lines and in dotted lines. We may at once state that we have not found either of these two latter positions obtaining in any loom, but from data of different looms before us—looms sent out by makers of repute in both England and Scotland—we find a variation in the relative position of the crankshaft of from 1 in. above to $1\frac{1}{8}$ ins. under the position shown in solid lines. The two dotted positions were chosen intentionally exaggerated in order that our contentions might be more easily shown. In each case the connecting arm and the crank radius are the same.

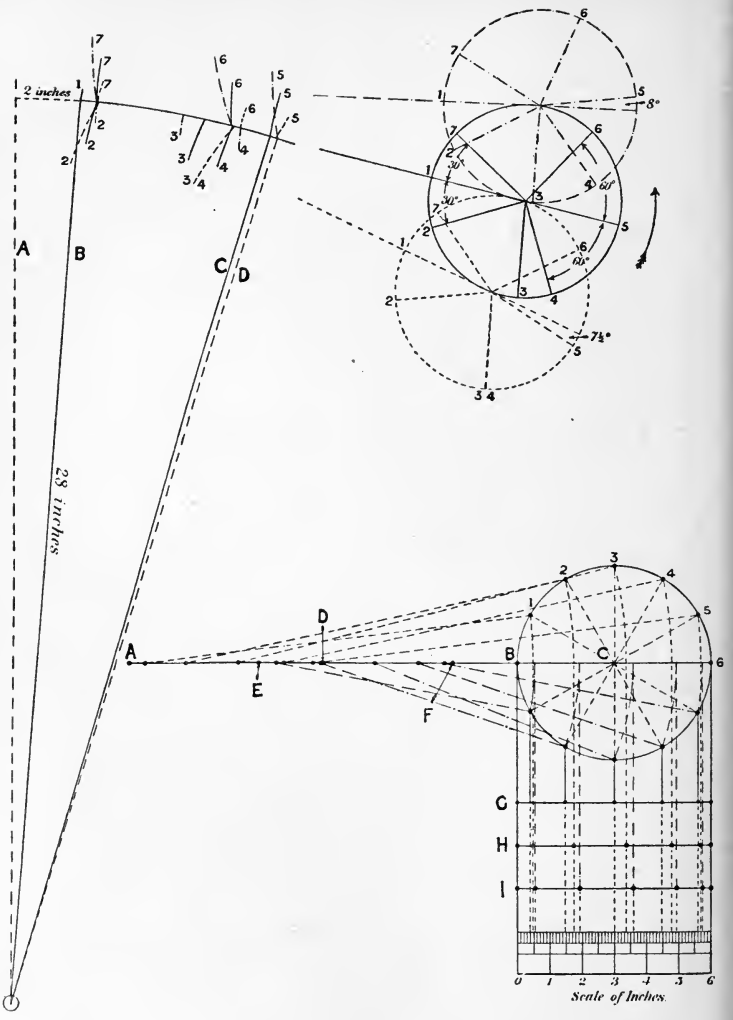

FIG. 195

FIG. 196.

In regard to the increase of travel conveyed to the pin due to the raising or lowering of the crankshaft centre, this increase is indicated by the distance between the lines C and D on the arc described by the travel of the sword pin. It measures, in the cases given, about $\frac{2}{9}$ in., and is obtained by taking the compasses with a radius equal to the length of the connecting arm and passing one point round the dotted circles, at the same time retaining the other point on the arc described by the connecting pin. The exact point on the crank circle when the lay is full back is obtained by drawing a line from the point 5, thus found on the arc, through the centre of the crankshaft to cut the circle. From the figure it might be imagined that the increase of travel conveyed to the pin is the same in each extreme case. This is not so, but the difference between the increases is so small that it is impossible to reproduce it in the figure. By raising the crankshaft centre, the increase of travel is approximately 0·23 in., whilst by lowering the shaft centre the increase of travel is approximately 0·20 in. In the former case, if, as we assumed, the crank travels backwards by the bottom centre, approximately 8 degrees more than half a revolution of the crank's movement is taken to traverse the pin backwards, and 8 degrees less than half a revolution to move it forwards, or 188 degrees for the backward movement and 172 degrees for the forward movement. In the latter case—*i.e.*, when the crankshaft occupies the low position—the opposite holds good, $7\frac{1}{2}$ degrees more than half a revolution being necessary to move the pin forwards, and $7\frac{1}{2}$ degrees less to move it backwards.

One point that attention might be drawn to here is the fact that, in adjusting the loom for picking, while it is customary to do so with the crank in one definite position

—say the bottom centre,—it is necessary to observe that the position of the connecting pin, and therefore of the reed, when the crank is on the bottom centre, will vary according as the centre of the crankshaft is raised or lowered. In this figure we have indicated, by corresponding numbers on the arc of travel and on the crank circles, the positions which the connecting pin would occupy when the crank is on the bottom centre with the crankshaft in the three different positions.

Then, as regards the position of the pin when the shuttle enters the shed and when it leaves it: On each crank circle we have marked off 60 degrees before and after the full back position, and have indicated the positions of the pin upon the arc of its travel with the crank in these positions. It will be observed in the case of the solid or centre circle that these positions of the pin are practically coincident. In the case of the upper dot-and-dash circle the pin, and therefore the reed, are farther forward at 60 degrees after the full back position than at 60 degrees before it. With the lower dotted circle the opposite is the case, the pin in this instance being farther back at 60 degrees after the full back position than at 60 degrees before that position. It may be urged that in no case are any of these positions farther forward than in the case of the solid circle, and that the movement of the crankshaft out of that position is therefore advantageous. But any advantage gained in this respect is nullified by the fact that an increase of friction is conveyed to the warp by the increase of travel, beyond that which is necessary or desirable, which is imparted to the reed.

The effect of the movement of the crankshaft into either of the dotted positions, so far as the velocity of the pin when beating up is concerned, is practically nil, as the

position of the pin when the crank is yet 30 degrees on either side of the full forward position is practically identical in each case.

Numbers.	Positions.
1	Crank full forward.
2	,, rotated 30 degrees backwards.
3	,, on bottom centre.
4	,, 60 degrees from full back position.
5	,, at full back position.
6	,, 60 degrees after full back position.
7	,, 30 degrees from full forward position.

The above table, in which the numbers given refer to similar numbers on the crankshaft circles and to the lines indicating the position of the connecting pin at these times, will assist materially in reading the diagram.

We do not think, however, that change of the position of the crankshaft is ever resorted to for the modification of the eccentricity of the movement of the connecting pin, as the variation in actual practice which is made on either side of the position which we have indicated should obtain, is indicative rather of a want of knowledge of the results obtainable from such variation of position than of a desire to obtain them. Modification of the eccentricity of the movement of the pin is best obtained by the reduction of the length of the connecting arm, and the increase of the radius of the crank, and is usually resorted to for one consideration only—that of the time allowed for the passage of the shuttle, or the reduction of the travel of the connecting pin for a given portion of the crank's revolution round the full back position. As a result of thus decreasing the velocity of the lay about the back centre, an increase of its velocity when about the front centre is obtained; and because of this unavoidable result of the

change, it has been customary to argue that it was one of the objects aimed at.

The actual travel of the pin with any given crank and arm and for any portion of the crank's revolution can be calculated from the formula already given; but it can also be readily shown graphically by a diagram such as Fig. 196, which is introduced to demonstrate principally the reduction in the velocity of the pin, or, in other words, the decrease of its travel for a given movement by the crank when approaching the full back position, which is due to the shortening of the arm. Let the line A B represent a connecting arm 12 ins. long, B C a crank of 3-in. radius; C 1 to C 6 six further positions of the crank B C, with 30 degrees interval between each; and A D the travel of the connecting pin $3 \times 2 = 6$ ins. By taking a radius of 12 ins. (the length of the arm), and the points 1 to 5, as centres in succession, the position of the connecting pin on the line A D when the crank is in these positions can at once be determined. Then, by taking the points on the line A D as centres, their respective positions can be readily transferred to the diameter line B 6 of the crank circle, and from there projected to the parallel line H. In a similar manner let E B represent a connecting arm 8 ins. long, B C the crank radius, and C 7 to C 6 other six positions of the crank of 30 degrees interval; while E F is the travel of the pin (6 ins.) actuated by the reduced connecting arm. By a process similar to that just stated, the new positions of the pin on the diameter B 6 of the crank circle are again found and projected to the parallel line I. The line G, as will be seen, contains the positions due to an arm of infinite length or a true harmonic motion. By a comparison of the three lines G, H, and I, the effect, first of the connecting arm of finite length, and then that of the short or reduced arm, is

at once obvious. From a careful measurement of actual-size drawings, and also by calculation, it is found that the difference or reduction in the travel of the pin, for 120 degrees of the crank's revolution, from point 10 to point 4 in the direction of the arrow, due to the introduction of the 8-in. arm as compared with the 12-in. arm, is 0·3 in. We have further projected each point on the three parallel lines to a scale of inches in order that the travel of the pin for any period represented may be roughly approximated.

Before leaving the question of beating up, it may be well to draw attention to the bad effects resulting from the reed being allowed to pass the vertical plane of the rocking shaft too far when full forward. In ordinary circumstances, where no reduced connecting arm has been introduced (and, as already stated, looms are to-day working satisfactorily with connecting arms and cranks of the same dimensions in looms of all widths up to 130-in. reed space), it is usual to find the reed at least 2 to 3 ins. in front of the connecting pin, with the latter, say, 2 ins. behind the vertical plane of the rocking shaft when the reed and the cloth are in contact. Even with these conditions obtaining, it is evident that the reed will pass the vertical plane of the rocking shaft by about 1 in., and begin to fall slightly when full forward. Here, however, the fall is so slight that no evil effects result. It is not unusual, however, especially in looms where the position of the rocking shaft is adjustable, to find it so placed that it is in the same vertical plane as the connecting pin when the latter is full forward and the reed therefore 2 to 3 ins. in front. Here it is evident that the reed will fall considerably before reaching the full forward position, and instead of meeting the cloth at a little less than a right angle, the two form a comparatively acute angle. Now in

all looms, and more particularly in looms where the shedding is performed by a single-lift jacquard, the cloth and the warp threads form a gentle decline from the breast beam to the harness when beating up takes place. But the reed and the weft are in contact when the former has yet approximately 2 ins. to travel forward, while the latter has to travel up an inclined plane; and it is evident that the weft will be most gently treated if actuated by a body moving in the same plane as itself—*i.e.*, by a body moving in the straight line formed by the warp. Seeing that the reed is travelling in the arc of a circle, it is obvious that it is impossible to arrange this absolutely correctly; but a sufficiently near approximation to this movement is obtained when the position of the rocking shaft is so arranged that the reed in its forward movement is not allowed to fall. Where it is allowed to pass the vertical plane of the rocking shaft for any considerable distance, the reed, while moving the weft up an inclined plane, is itself actually falling, and in so doing is acting like a knife upon the weft. Further, due to the inclination at which the reed now is when it reaches the cloth, it presses on the cloth from above and causes the latter to run down the reed and to accentuate the objection referred to.

On page 361 we drew attention to the fact that the race of the lay should not be allowed to dip forward at any time, and suggested, as a means of preventing this, that the race should be made level when full forward. It will be observed that in the accompanying Fig. 190 this condition has been observed—the reed is inclined slightly towards the race, and the angle contained between the race and the reed is approximately 87 degrees. This condition of things is the most satisfactory for all classes of leaf work (dobby and tappet looms) where the leaves, as

they recede from the fell of the cloth, have an increased travel or "shed" imparted to them, and so preserve the angle of the under-shed line. In damask or harness weaving, however, the harness is almost invariably mounted so that the mails will be on a dead level from the front to the back when in their lowest position, and it is evident that the warp threads from the front mails and those from the back mails will form different angles with the horizontal. The average angle thus formed is a little less than in the case of leaf work, and on this account it will be found that the same inclination of the race of the lay will will not be suitable in both cases. In some districts the difficulty is overcome by drawing back the rocking shaft until the race of the lay is tilted forward to the proper inclination; but this results in the objectionable falling of the reed when beating up. The angle of the race ought to be corrected, not by interfering with the position of the rocking shaft or with the inclination of the reed, but rather by simply altering the race of the lay itself. By doing so the angle between the race and the reed is increased until an angle of approximately 92 degrees is reached.

Although we shall now begin to treat of what might be called the subsidiary or secondary movements of the power loom, it must not be concluded that the three primary motions have in any way been exhausted, or that the last word has by any means been said about the principles underlying the present method adopted for picking and for beating up. In picking, when due attention is paid by loom-makers to the proper formation of the picking wypers, and by tenters to their adjustment, we have in the cone overpick a motion that, although negative in principle, gives comparatively little trouble to the tenter, and, relatively, is productive of but a minimum expenditure of

power. In certain districts, however, we find that wypers are still being made of a most absurd and antiquated form, and tenters are sometimes left with little option in the matter of their adjustment.

In beating up—or, rather, in the method of actuating the lay—it is the exception to find any departure from the standard cranked shaft and connecting arm, this arrangement being in use in its usual form in looms of at least 200-in. reed space. There are several devices—one or other of which is occasionally resorted to in looms of exceptional width—employed in order to produce a more protracted movement on the part of the lay while the shuttle is passing from box to box than would be obtained by the ordinary method. One of the simplest, and probably the most common, of these devices is the use of elliptical and eccentrically-set wheels, the driving one of which is so geared with the driven one (which is fast on the crankshaft) that the speed of the latter wheel, and therefore of the shaft, varies during one revolution, being slow while passing round the back centres, and quick while passing round the front centres. A further advantage of this reduction of the speed of the crank shaft at the proper moment is that in the case of the shed being formed by a crank on the crank or wyper shafts, a corresponding reduction of motion will be imparted to the movement of the shed at the same time. In shedding mechanisms we think those types have been treated which are usually met with in the weaving industry.

In special types of looms, such as those for weaving Brussels and Wilton carpets, certain kinds of hose-piping, etc., it has been found advisable to give a double beat of the lay and reed to every shot of weft, and the necessary modification of parts for this purpose as applied to looms

for Brussels and Wilton carpet-weaving is illustrated in Fig. 197. The crank A rotates as usual around the centre

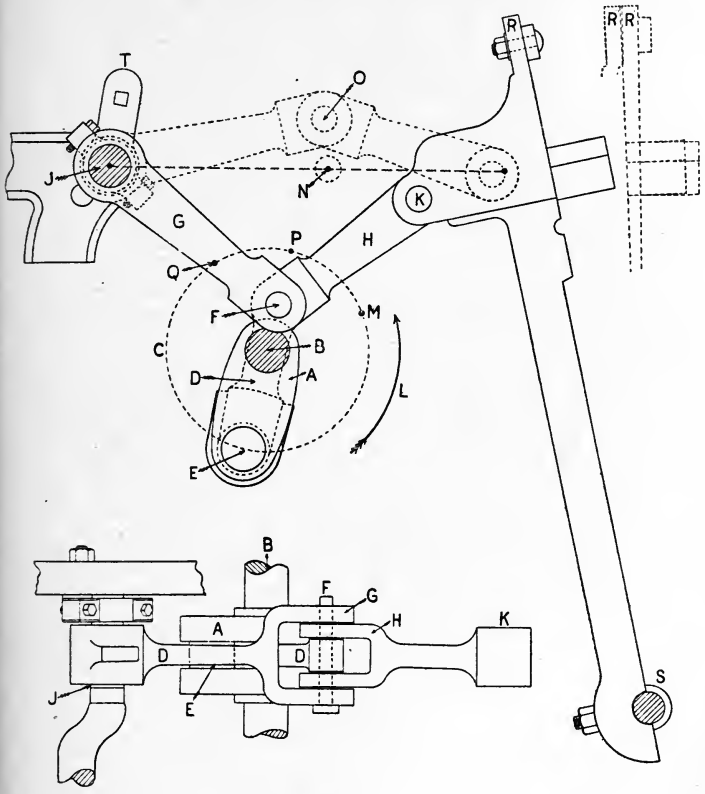

Fig. 197.

of the crankshaft B, and describes a path C as shown by the dotted circle. The usual strap, gib and cotter are employed to attach the connecting arm D to the crank arm A at E, while at the other end of the connecting arm E

a pin F passes through E and also through the forked ends of connecting arms G and H. The opposite ends of G and H are fulcrumed respectively on a fixed centre at J, and on the sword pin K. The direction of motion is indicated by the arrow L. When the centre of crank arm E reaches the point M, the arms G and H are in one straight line, with the pin F at point N; the reed will therefore be in contact with the cloth. Further rotation of centre E beyond point M results in point F being raised from point N to a maximum height at O, at which time point E will have reached P. The crank arm continues to rotate, and when the crank E reaches Q, the two arms G and H will again appear in the same straight line with the reed touching the cloth. As the crank E moves from M to P, the reed recedes about $\frac{3}{4}''$ from the cloth, and then comes to again, the top R of the sword, during the oscillation of the latter about S, moving back from R′ to R″, and then forward again to R′. From the position of the parts it will be seen that the double beat is obtained by a minimum movement of the reed, thereby imparting the least possible amount of friction to the yarn. It will also be seen that a comparatively short stroke of the sword pin results from a large crank; indeed the stroke is less than the radius of the circle C described by the crank, whereas in the ordinary looms, as indicated in Fig 195, the stroke equals the diameter of the path described by the crank. In Fig. 197 the lay is full back, and the shuttle would, naturally, be crossing the shed at this time. The plan of the various arms and crank indicates the positions when arms G and H are in one straight line. The small projecting arm T is used for operating the let-off motion for the stuffer warp.

CHAPTER XV

LET-OFF MOTIONS

Let-off motions consist of the mechanical parts which determine the rate at which the yarn shall be drawn from or given off by the yarn beam. In conjunction with the uptake motion they regulate the travel or "pace" of the yarn, and, due to this fact, are sometimes termed pacing motions. These let-off motions may be roughly divided into two classes, negative and positive, the former of which simply exert a certain braking power over the yarn beam, the movement of the beam being in general due to the action of the uptake and the shedding motions, the first-mentioned motion taking away a certain portion of the woven cloth, and the shedding pulling a further supply of yarn from the beam. In some few cases the action of the reed in beating up is partly instrumental in withdrawing warp from the yarn beam. Negative let-off motions have no connection whatever with the uptake motion, and from a purely theoretical point of view might be considered makeshifts; nevertheless they are simple and effective, and for most classes of work may be said to give satisfaction. Indeed, amongst all the looms which are used for cotton, linen, jute, and silk weaving, there is probably not one loom in a thousand that is not fitted with one or other form of negative let-off motion.

In Figs. 198 and 199 end and back elevations respectively are given of a common arrangement of this type for light fabrics. The yarn beam A is supported

in position by its arbors B being caught or held in suitable

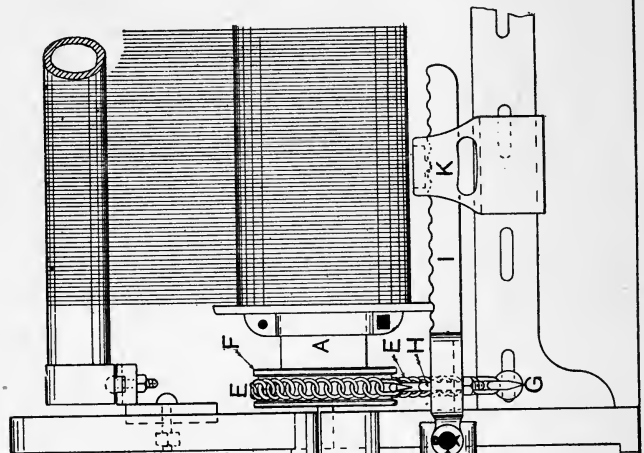

FIG. 199.

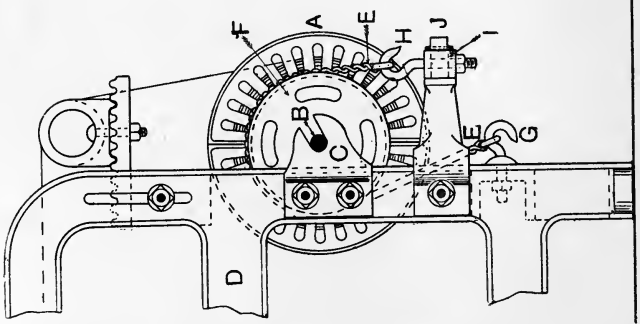

FIG. 198.

brackets C bolted to the loom frame D. The friction

necessary to retain the beam is generated between the arbor B and the supporting bracket C and by the chain or rope E, which is passed either partially or wholly round the beam head F, and is attached by one end to a fixed hook G, and by the other end to a hook H bolted in the lever I. The latter is fulcrumed on the stud J and has the necessary force imparted by means of a weight or weights K. As the beam A empties, the weights K require to be moved nearer to the fulcrum J, due to the reduced leverage with which the yarn is pulling round the beam. This motion is widely adopted, and for light fabrics is sufficiently powerful, but it is not suitable for heavy fabrics, nor can it be said to be highly satisfactory from the weaver's point of view, as the levers I and the weights K (and of the latter there are sometimes a considerable number) require to be lifted to relieve the beam every time the latter from any cause requires to be turned backwards.

To obviate the use of many and heavy weights, the beam head or drag head F is often made wide enough to permit of chain E being passed round a second time; and for the same reason the brackets C are sometimes enlarged sufficiently to take the outside diameter of the tubular yarn beam A. In such cases the arbor B is dispensed with, and the wrought iron tube A continued for a few inches beyond the drag head F to provide a larger frictional bearing surface than is possible with the arbor B.

Different motions have been introduced from time to time with the object of eliminating the cumbrous and clumsy lever and weight method of pacing. One of the most recent of these arrangements, Hempseed's patent, is illustrated in Fig. 200. Levers A are fulcrumed on

studs B, suitably situated immediately behind the beam drag heads C, and are provided with two pins D which engage with the two ends of the hoop iron band E which passes round the drag head. The long arm of lever A is continued to the front of the loom, and there supported and controlled by a strong helical spring F, and a strap G, the latter being fixed to the periphery of roller H of about $2\frac{1}{2}$ ins. diameter, keyed on shaft J. In some looms the shaft J is most conveniently situated just under the

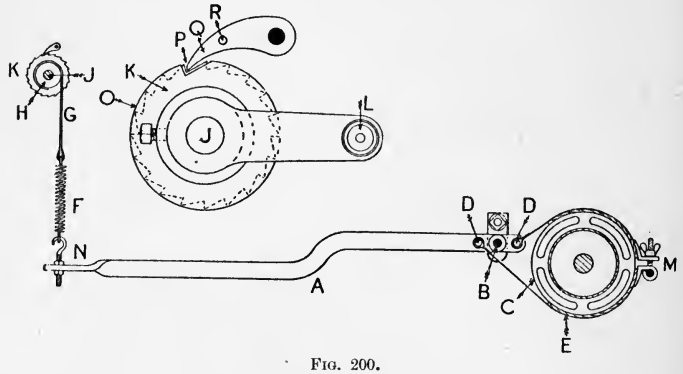

FIG. 200.

breast beam. The larger detached figure shows that at the ratchet wheel end of shaft J a handle L is provided, by means of which the shaft may be partially rotated, thereby lowering lever A, and removing the pressure from the drag head. Naturally any downward movement of the long arm of the lever A will cause both pins D to slacken band E, since the two pins are on opposite sides of the fulcrum B.

The hoop band E is leather lined to secure a true working surface on the drag head, and its continuity may be readily broken at M by means of a hinged bolt, so

that a change of pace, or a removal or replacement of a beam may be accomplished quickly. If desired the band E may be continuous, although this makes the change of beams more difficult, and, besides, causes all changes of pace to be made at the front of the loom at N. A shell O compounded with ratchet wheel K, see detached figure, enables the weaver to bring back the ratchet wheel exactly to its original position before restarting the loom. The shell O masks all the teeth of the ratchet K except one as shown at P. Retaining pawl Q, which may be lifted out of gear by means of pin R, is of such a breadth that it extends over the surface of the shell O as well as over the teeth of the ratchet; it will therefore retain the ratchet wheel by that tooth only which is exposed by the recess in the shell or mask O. The latter is of course set in its correct position by the tenter.

The motion is simple and inexpensive, and may be easily fitted to most looms which work with a negative let-off motion. It deals more gently with the drag heads of the beam than do chains; it is easily manipulated by the weaver, and does away entirely with the use of weights. It is essential, however, that the beam drag heads should be perfectly circular and not irregular as is the case with many. Spring F partially compensates for this defect in the drag head, but it is much better to turn up the drag heads to a true circle in order that the grip of band E or the pacing of the beam may be perfectly regular.

For the heavier linens and for most classes of jute fabrics it is essential that a powerful arrangement be adopted. Fig. 201 illustrates one of the most modern and successful types. It will be seen that the yarn beam is supported in position by resting the heads of the beam

upon hard wooden blocks A, the upper sides of which are concaved to fit the curve of the beam head, and the whole

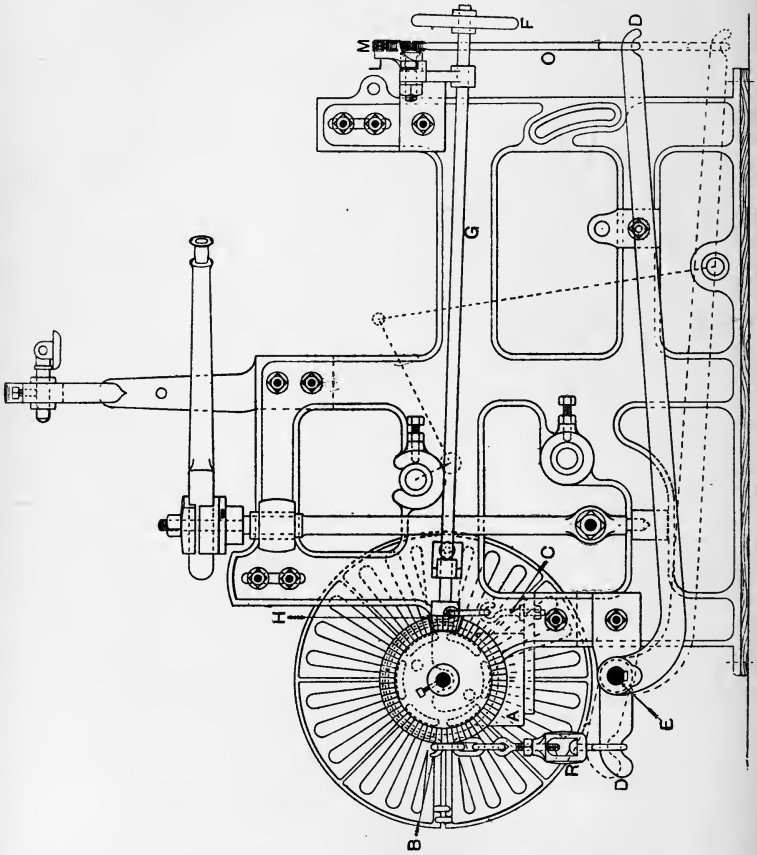

Fig. 201.

placed upon suitable brackets bolted to the framework. The beam itself is usually a malleable-iron or mild steel tube of about $5\frac{1}{2}$ ins. outside diameter, the heads being

shrunk on at either end and then turned down to standard dimensions. Passing about half-way round the heads and on the upper side is a wrought-iron band B (preferably leather lined on the under side), one end of which is linked, as shown, to a fixed hook C in the bracket, while the other end is attached by a chain and an adjustable screw to the short arm of the lever D fulcrumed at E. The lever D, as shown, is in two portions, each keyed to the shaft E, which extends across the loom and carries a similar short arm only, at the other end, for pacing that end of the beam. Since the long arm of the lever D is a fixture in ordinary circumstances, it is obvious that by the proper adjustment of the screw R practically any desired pressure may be made to bear upon the beam head. The long arm of the lever D is represented in its normal position by solid lines, but when through any cause the weaver wishes to turn back the yarn beam, this arm is allowed to fall to the dotted position, while the short arm rises in a corresponding degree and relieves the beam of all pressure. Under these circumstances the beam itself may be rotated in either direction by means of the hand-wheel F, the shaft G, and the bevel pinion H, which gears with a bevel wheel set-screwed on the beam arbor outside the loom frame.

The method of retaining the lever D in the normal position, and of relieving it when necessary, is seen in detail in Figs. 202 and 203, which show respectively the side and front elevations of the relieving motion. Centred on a stud J—which is supported in a bracket bolted to the framework—is the relieving lever K, which carries, cast near its fulcrum, a curved piece L round which the chain M is passed and fixed to L at N. The other end

of the chain and the lever D are connected as shown by the link O. From the position of the centre of the stud J and the vertical plane in which the long arm of the lever D works, it is evident that any upward pull on the short arm, or downward pull on the long arm, will but serve to

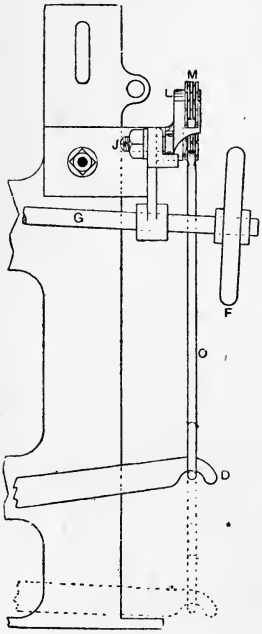

FIG. 202.

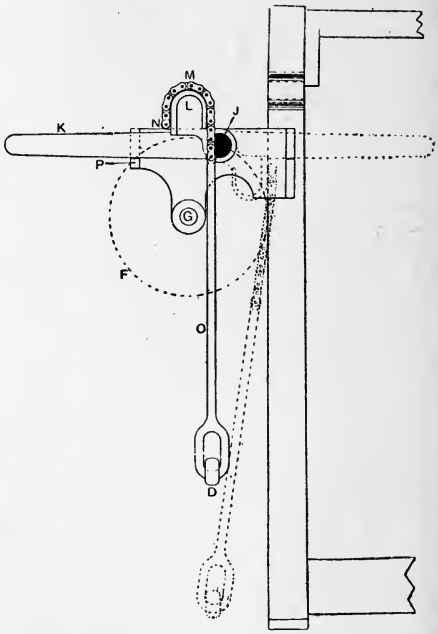

FIG. 203.

hold the lever K more firmly in its normal or proper position (*i.e.*, resting upon the projecting part P of the bracket) and make it impossible for any accidental relief to be given to the beam. This fact constitutes the great advantage of this method of arranging the relieving bracket over that of the common quadrant type, which,

not unusually, through worn parts and a defective spring, fails to keep its proper grip of the beam. A further advantage of this arrangement is the increased amount of relief which it gives. The dotted positions in both figures show the parts in their respective positions when the pressure upon the beam heads has been removed.

The two main objections to the foregoing negative let-off arrangements are: Firstly, the fact that the pressure imparted to the beam by weight or by screw has to be adjusted manually, and therefore somewhat irregularly, from the full to the empty beam; and secondly, that the yarn has to be forcibly pulled off the beam, and is thus subjected to a greater stress than is necessary for the sole process of weaving.

It is also sometimes urged as an essential feature of a let-off motion that it shall maintain the yarn at an equal tension whether the shed be closed or open; but as this condition is only possible in the case of certain shed formations, such as plain weaving and centre shedding, it is obviously absurd to make it a condition upon which a let-off motion shall be judged. In the cases mentioned it is possible to maintain an approximately equal strain upon the yarn whether the shed be closed or open, by causing the back rail of the loom to vibrate to the necessary extent in unison with the shedding mechanism, or by introducing a similarly actuated supplementary rail over which the yarn in the shed is caused to pass. But this may be, and is in many cases, done independently of the let-off motion. In open shedding, however, as well as in sheds of other types where a portion of the warp may be in tension for two or more picks in succession whilst another portion is changing, it is obvious, we think, that anything of this nature which is done to take up the slack of that portion of the yarn in

motion will but increase the strain upon that portion at rest, unless, as is the case with the pile warp in Brussels and Wilton carpet weaving, each thread of the warp be paced individually.

To overcome the former of the above objections, that of manual adjustment, several devices have from time to time been introduced, but all of them have had but meagre support. These devices have been chiefly based upon the utilisation of the decreasing diameter of the warp beam in order either to shift the weights K (Fig. 198 and 199) proportionately nearer to the fulcrum of the lever I, or to allow the long arm of the lever D (Fig. 201) to fall gradually and the short arm to rise, and thus to reduce automatically the pressure upon the beam. The number of parts added, however, and the complications arising from their addition, have, as already indicated, prevented anything like even a fair adoption of any of those automatic arrangements.

Positive let-off motions have been introduced in which the central idea consists of drawing the warp positively from the yarn beam by means of a measuring and a pressing roller, and in this manner delivering it at a fixed rate to the further processes. This measuring roller is driven by gearing from the wyper shaft, the gearing being so arranged that one of the wheels of the train represents the picks desired per quarter, half, or one inch. In this motion the measuring and the taking up rollers are exactly alike in circumference, and a continuation of the gearing mentioned drives the latter roller practically in unison with the former, a simple mechanical means being available for slightly reducing the speed of the taking-up roller in conformity with any predetermined percentage of allowance for the contraction between the warp and the cloth lengths. The

warp beam in this motion requires to be "paced" only sufficiently to prevent too rapid unwinding of the yarn. Whilst an arrangement of this kind may make a certainty of the regular delivery of the warp, it is open to question whether the principle of so connecting the let-off and uptake motions that a given quantity of warp will always turn out a definite length of cloth will be beneficial to the weaving process, especially in the case of weak or inelastic fibres.

A positive let-off motion which is automatic in its character is much to be preferred to one of the type just described. The usual feature in these automatic motions is a sensitive back beam or rail which responds to the tension or stress in the warp yarn passing over it; while the difference between the various motions of this type lies in the method of taking advantage of and applying any degree of movement imparted to this sensitive rail in virtue of the increase or decrease of tension upon the warp due to the action of the uptake motion and the weaving process generally.

In Fig. 204 the general arrangement of a motion of this character as found in the Hollingworth and Knowles' loom is shown. Fixed to one end of the yarn beam A is a worm wheel B, which gears with and is driven by a worm C on the shaft D. About midway on this shaft a ratchet wheel E is fixed, the ratchet and shaft being rotated by the alternate action of the pawls F and G, while motion to the latter is obtained from the lay swords H by means of the rod I and the lever J. The shaft D is prevented from revolving too freely by means of a strap which partly encircles the brake pulley K, and is weighted at L.

Evidently, if the shaft D were to be rotated continuously at one fixed rate, the wheel B, and therefore the yarn beam A, would revolve likewise, and a continuous, although a

slightly varying, supply of warp (due to the varying diameter of the beam) would be given off whether the cloth required it or not. In order to avoid this, and to ensure a steady and efficient supply of warp, a shield M (seen in

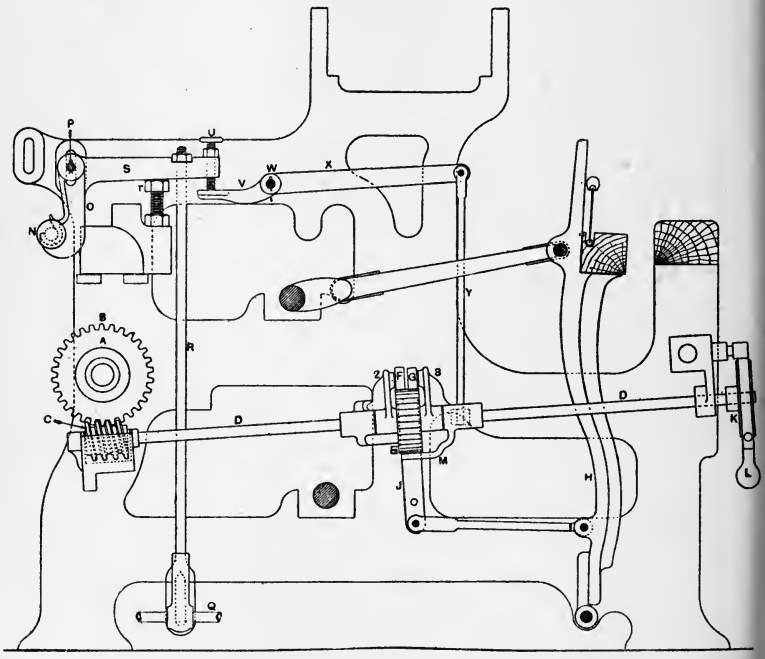

FIG. 204.

detail in Fig. 206) is mounted loosely on the shaft D and is caused to interpose between the teeth of the ratchet wheel E and the pawls F and G, preventing contact of the latter with the former, and therefore preventing the rotation of the shaft D and of the yarn beam when the yarn is slack; and, on the other hand, when the yarn is in tension, the

shield is caused to withdraw from between the ratchet and the pawls, and so permit the shaft D to be further rotated and the yarn to be given off. The shield M is controlled in the following manner: the back beam or roller N, Fig. 204, over which the warp passes, is supported in the swing bearer O, fulcrumed at P, and is continually pressed outwards and upwards against the warp by means of a weighted lever (not shown) fulcrumed on the shaft Q, and by the link rod R, and the arm S of the swing bearer. The adjustable screw T regulates the maximum extent to which this can be done. At the extremity of the arm S another screw U is adjusted, which, when the yarn slackens and the arm S falls, rests upon and depresses the arm V of the lever fulcrumed at W; the arm X of the same lever rises in a proportionate degree, and, by means of the rod Y and a bell-crank lever fulcrumed on the shaft D, raises the shield M and causes it to interpose between the ratchet wheel E and the pawls F and G. The further rotation of the shaft D, and therefore of the yarn beam A, is thus temporarily prevented or reduced in proportion to the extent to which the shield M is made to interpose. When tension upon the yarn increases, the roller N is drawn inwards, the arms S and V rise, while the arm X and the rod Y fall and withdraw the shield M, allowing further engagement of the pawls with the ratchet wheel.

From the foregoing description it will be seen that this let-off motion, while being perfectly positive in its delivery of the warp, is also entirely automatic in its action as to the quantity delivered, depending as it does wholly upon the slackness or tightness of the warp and the pressure which the latter exercises upon the back rail. The pressure necessary to cause the back rail N to swing inwards so that

the shield M can fall is regulated by means of the weights upon the lever fulcrumed on the shaft Q.

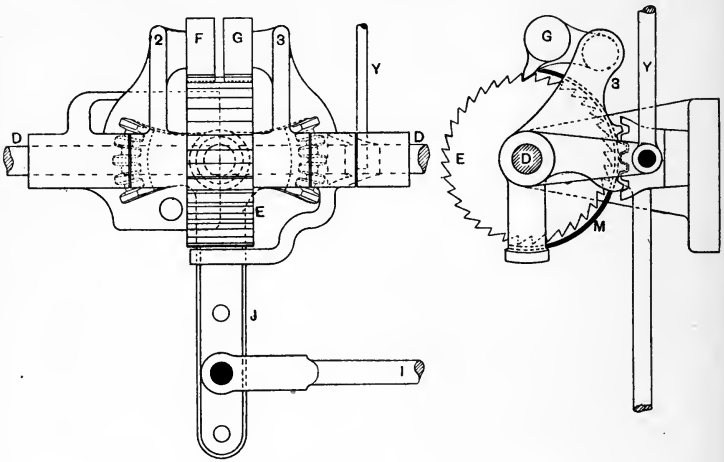

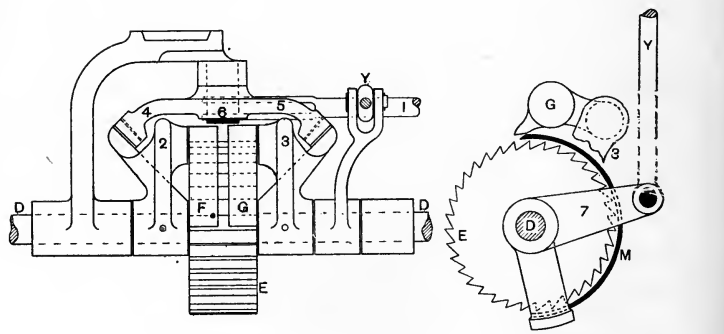

FIG. 205. FIG. 206.

Detail views of the method of actuating the ratchet wheel E and the shield M are given in Figs. 205 and 206, the former showing a plan and elevation of the ratchet

wheel, while two positions of the shield, but only one pawl, are shown in the latter. Mounted loosely on the shaft D (Fig. 205), and on either side of the ratchet wheel E, are two semi-bell-crank levers 2 and 3 which carry respectively on one arm pawls F and G, while the extremity of the other arm of each lever carries a segment of a bevel wheel. Corresponding segments on the end of each arm 4 and 5 of the T lever J, fulcrumed on a stud 6, impart the necessary oscillating movement to levers 2 and 3, and therefore to the pawls F and G. Motion to the lever J is, as already stated, conveyed from the lay swords by means of the connecting rod I.

In the upper view of Fig. 206 the shield M is represented in its position of inaction, or that of allowing contact between the pawl G and the ratchet wheel E; while in the lower view, by the slackening of the warp yarn, the rod Y has been raised, and has, by means of the bell-crank lever 7, rotated the shield M until it has interposed between the pawl G and the ratchet E, preventing contact between them, or at least exposing fewer teeth of the ratchet to the action of the pawl.

About the only condition which it is necessary to impose upon this motion is that it shall be able to drive the yarn beam A at a sufficient velocity when at its smallest diameter. A notable feature of the motion is the ease with which slack yarn can be taken up by the yarn beam when picking back is necessary. Immediately the yarn is slackened, the shield M will interpose between the pawls and the ratchet, permitting the weaver, by means of the brake pulley K, to rotate the shaft D and the yarn beam in the required direction.

Fig. 207 shows the same motion applied in the case of a two-beam warp. All parts of the motion are duplicated with the exception of the connecting rod I.

A let-off motion of the above character is probably of most value for, and is most easily applied in, cases where the weave of the fabric is such that a more or less constant

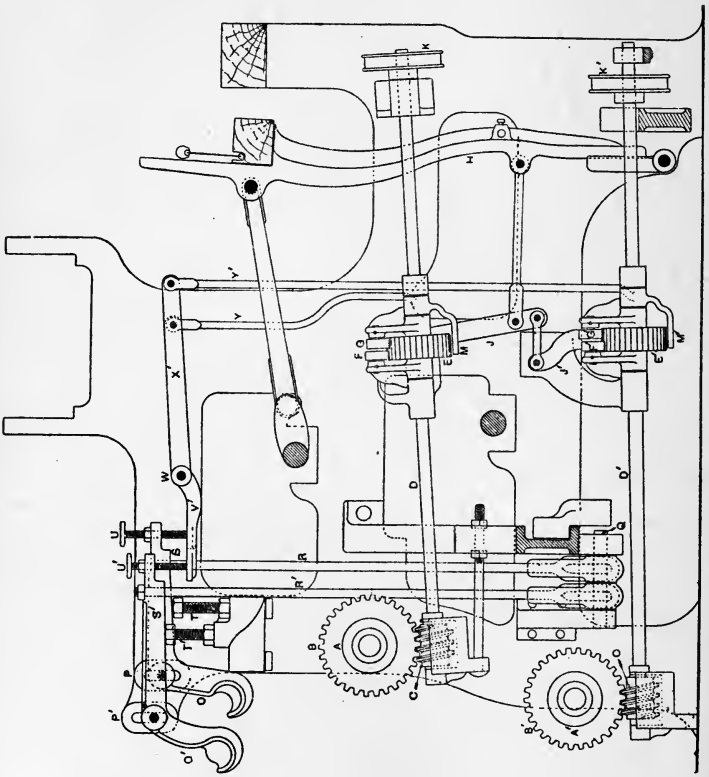

FIG. 207.

pressure will be exerted by the yarn on the sensitive back beam or rail. In other weaves, as for example the $\frac{1}{1}$ plain, or with a centre shedding mechanism, where the warp slackens considerably during the changing of each shed,

more trouble is experienced in the adjusting and working of such an arrangement. It is therefore generally advisable in such cases to introduce a second vibrating back rest, which will take up the slack referred to, and thus reduce the otherwise excessive vibration which would take place in the sensitive back rest which is employed for controlling the let-off motion. By this means also the pressure of the yarn upon the latter is kept more nearly at a constant value.

A motion of this type, frequently used in looms for plain linen weaving, is illustrated in Figs. 208, 209, and 210. Fig. 208 shows *inter alia* an end elevation of the yarn beam A, the sensitive back rail B, and the vibrating back rail C; Fig. 209 is a plan view of the continuation of the worm shaft D to the front of the loom with the connections at that end of the shaft; while Fig. 210 is a front elevation of shaft D and the same connections.

The yarn beam A is a heavy wrought-iron tube, open at the ends, and suitably supported in brackets, not shown; it is provided with a worm wheel E which gears with, and is slowly and intermittently rotated by, the strong worm F fixed on shaft D. Worm shaft D extends to the front of the loom, and is provided near that position with a ratchet wheel G, which is capable of being advanced one tooth or more every pick by means of the pawl H. The latter is mounted upon a lever J which is loose upon the shaft D, and which is always depressed to the same extent by means of the stud K, bolted in arm L, and therefore rocking with the rocking shaft M. As the lay comes forward, stud K is depressed, and, although it is loose in the vertical slot N of the connecting rod O, it ultimately reaches the bottom of the slot, and pulls down the pawl H partially every pick. Pawl H is, however, not

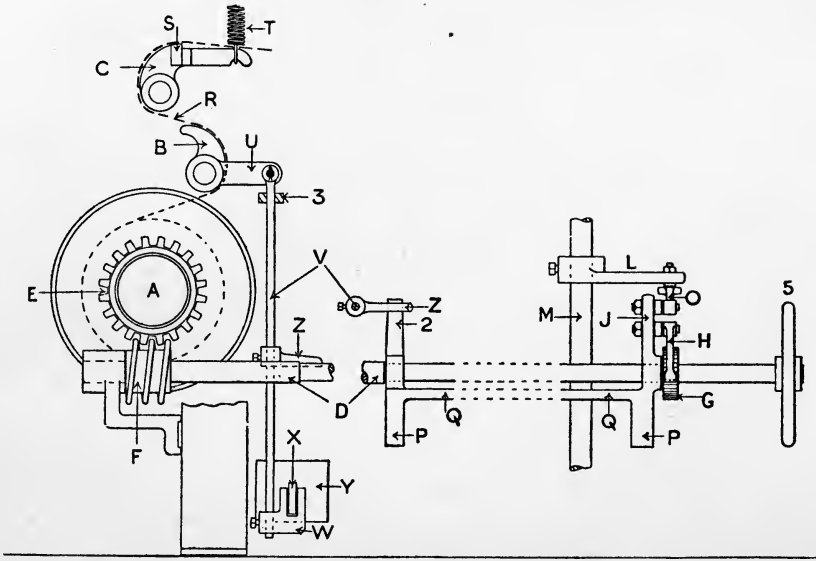

FIG. 208. FIG. 209. FIG. 210.

raised by the stud K, since the latter is free to rise in the slot N without interfering with the position of the pawl. Lever J, on which the pawl is mounted, is continued to the other side of shaft D, where it is heavily weighted by the two parts P and the bar Q which connects them; consequently as stud K rises, lever J is raised along with the pawl H by the gravitational action of these heavy parts.

The extent to which the pawl H rises, and hence the extent of movement which it will impart to the ratchet wheel G in its next downward movement, is limited by the action of the following parts, which are in turn controlled by the varying degree of tension upon the warp. The path of the warp, after it leaves the yarn beam A, is indicated by the heavy dotted line R to be first round the back of the sensitive back rail B, and then over the front of the vibrating rail C. The ends of both these rails are turned up to form true bearing surfaces, and both rails are supported in suitable brackets. Vibrating rail C is strictly limited in its movement of about half an inch in both directions by fixed stops which act on both sides of projections S at each end of the rail. Spiral spring T requires to be of just sufficient strength to return the rail to its full back position. Projecting from the near end of sensitive rail B is a short lever U, which, through rod V, and a stirrup bracket W, supports the free end of a lever X, the further end of which is fulcrumed in a bracket bolted to the opposite frame of the loom. Heavy weight Y is adjustably fixed upon the lever X, and through rod V, tends to pull lever U downwards and rail B inwards against the tension of the warp yarn. Adjustably fixed on rod V is a finger X, which projects over, and limits the upward movement of the part 2; since the latter is cast in one piece with the pawl lever J, the upward movement of the

pawl H is also restricted by the position of this finger Z. Now it is evident that any increase of tension on the warp beyond the normal will move the sensitive rail B outwards, and rod V and finger Z upwards, with the result that the pawl H will rise higher upon the ratchet wheel G; that more downward movement of the latter will take place, and that, therefore, more warp will be given off. Similarly, it is clear that an unusual slackening of the warp will permit rail B to move inwards, and rod V and finger Z downwards, until lever U might rest upon the adjustable bracket 3. In such a case, finger Z should be set so as to restrict the upward movement of the pawl at that time to such an extent that no further movement of the ratchet wheel G is possible until the warp is again more or less under tension, and the lever U raised clear of bracket 3.

A simple brake arrangement is provided at 4, Fig. 210, to prevent the overrunning of the worm shaft D, and hand wheel 5 serves admirably when it is necessary to take back the slack warp due to picking back. Although perhaps more difficult to set and adjust than an ordinary negative let-off, when once correctly adjusted, such a motion will work from beginning to end of a beam without alteration.

CHAPTER XVI

TAKING-UP MOTIONS

Of taking-up or uptake motions there are, generally speaking, only two kinds, positive and negative—*e.g.*, those in which the periphery of the taking-up roller, round which

the cloth passes, is caused to move positively through a certain fraction of an inch or other measure every revolution of the crank or the wyper shaft by certain gearing or mechanism, and those in which the said roller (which in this case is also the cloth beam) depends upon the pressure of the reed upon the fell of the cloth, as well as upon the pull of a spring in tension, or upon a weighted lever for that portion of movement which it is able to make.

By far the greater majority of looms are fitted with some type of the former class of motion, although in certain districts the impression still exists that for the making of the heavier numbers of flax canvas a negative motion is the best.

A representative arrangement of the negative type is illustrated in Fig. 211. Set-screwed on the arbor of the cloth beam A is a wheel B of 90 teeth, gearing with and driven by a small pinion C of 22 teeth, which is compounded with a ratchet wheel D of 116 teeth. The cloth in this case (represented by the line E) passes directly to the cloth beam without the intermediary of a taking-up roller. Concentric with, and fulcrumed on, the same stud as the ratchet wheel is a three-armed lever F, G, and H, the first arm of which carries a pulling pawl I in contact with the teeth of the ratchet wheel. Bolted to the arm G is a bracket J, to which one end of a strong helical spring K is fixed by an eyebolt and thumbscrews, as shown, while the lower end of the spring is hooked into an adjustable piece L set-screwed on the lever M, keyed to the shaft N. This shaft N extends inside the loom, and carries, keyed upon it, a lever O, which supports at its upper end an anti-friction roller P, the latter being kept in constant contact with the cloth upon the beam A as a result of the pull upon the spring K. Keyed upon the end of the rocking

shaft Q is a slotted lever R, in the slot of which is bolted a stud S carrying an anti-friction roller in contact with the

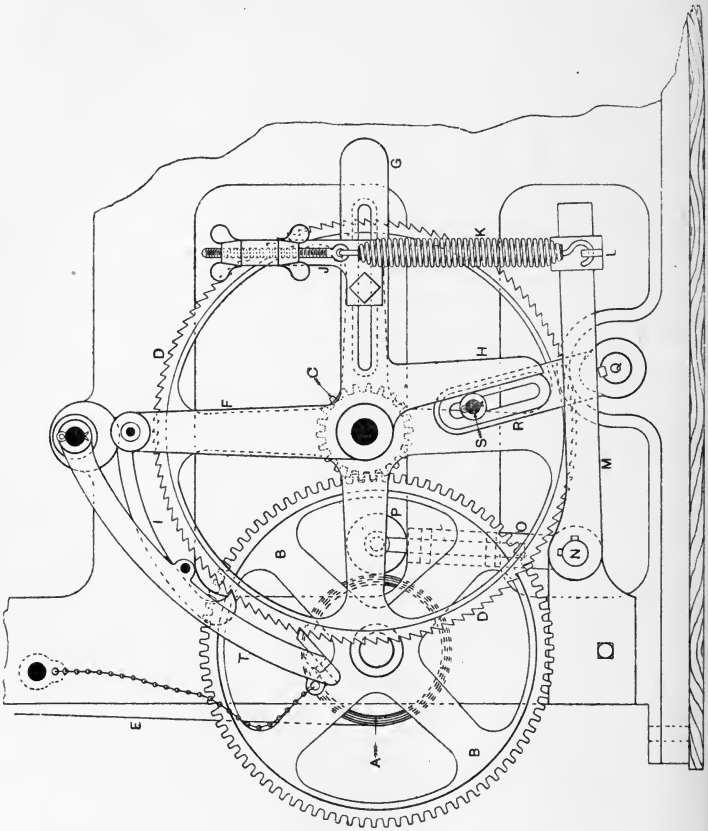

Fig. 211.

arm H of the three-armed lever. The lever R, being attached to the rocking shaft, moves in unison with the lay swords, and as the latter travel backward the stud S pushes the arm H in a similar direction, the arm G is

raised, distending the spring K, while the arm F moves in the forward direction and permits the pawl I to advance over one or more of the teeth of the ratchet wheel D. This continues until the lay swords begin the forward movement, when the stud S recedes from the arm H, leaving it and the other arms stationary with the spring K in tension, until the reed reaches the fell of the cloth. As a result of the pressure of the reed upon the fell of the cloth, the latter is slackened between the reed and the cloth beam A, but because of the pull of the spring K, the arm F and the pawl I rotate the ratchet wheel D, and by means of the pinion C and wheel B the cloth beam A is partly rotated, and the slack of the cloth taken up. The retaining pawl T prevents rotation of the motion in the opposite direction during the time the pawl I is moving forwards. In some cases the pawl T is composed of two or three sections, so that the rotation of ratchet wheel D to the extent of only one-half or one-third of a tooth respectively will be retained.

Eyebolt and thumbscrews in the bracket J permit of the direct adjustment of the strength of the spring K, while the slot in the arm G permits of its adjustment as to leverage. By the adjustment of the stud S in the lever R, the travel of the arms H and G, and therefore the extent of the stretching of the spring K, may be regulated.

In all motions of this kind there are what might be called two opposing forces. In the above case these are represented by what we may call the positive pull of the spring K and the negative pull of the cloth E. If the point L, to which the lower end of the spring is attached, were made practically a fixture (as in many cases it is), it is evident that the greatest pull of the spring would be a constant quantity from full to empty beam, unless an

alteration of the strength of the pull were made by means of the thumbscrews on the bracket J. On the other hand, while the pull of the cloth E would remain constant, the diameter of the beam A would increase as the cloth was wound upon it, giving an increased leverage to the opposing pull of the cloth. It is thus obvious that it is a matter of considerable difficulty to adjust K so that it will cause an equal length of cloth to be taken up every time the motion acts. This fact constitutes the great objection to this negative motion, since with it it is practically impossible to have a consistently-shotted cloth. Fabrics in which the shotting requires to be spaced can scarcely be produced by it, and it is only in the heaviest of fabrics where it is really of any use. One of the various attempts to secure automatic regulation of the strength of the spring is indicated in the figure. As the cloth beam A fills, the anti-friction roller P is pressed outwards, and through the shaft N the lever M is depressed, and the strength of the spring K is gradually increased in proportion to the working diameter of the cloth beam.

Positive taking-up motions might be subdivided into two sections—(*a*) those which are intermittent in their action, and (*b*) those which are continuous. The former motion is practically the only one met with in looms for cotton, linen, and jute weaving, and besides being simple and efficient, may, we think, be considered to have an advantage in being intermittent.

Every other action in weaving is also intermittent, and the action of taking-up is but one of the sequence. Occasionally the motion is found so arranged as to be in action when the lay is receding, and, in taking up the cloth, is further straining the yarn, which is already probably sufficiently strained in the operation of shedding. This,

it may be observed, is a condition of things which it is impossible to avoid if the action be continuous, or if the motion be operated intermittently from the wyper shaft, and, therefore, only every second pick; but where the intermittent motion is so arranged as to be in action when the lay is moving forward, and when the warp is, for some time, slack or slackening, the cloth will be taken up with a minimum of strain upon the warp. It is, of course, impossible to avoid a certain amount of strain with the present arrangements, because the taking-up motion is in action for practically half a revolution of the crankshaft.

Intermittent positive motions usually consist of a train of five wheels (sometimes three or seven), of which the first is a ratchet A, Fig. 212, and the others a pinion B (termed the change pinion), an intermediate wheel C, a pinion D (the latter may also be used as a change pinion), and the roller wheel E. The wheel E is keyed on the arbor of the cloth roller F, which in some of the looms for the finer fabrics occupies a position immediately under the breast beam. For the finer classes of work the surface of the roller F is clothed with perforated strip steel, wound from end to end in spiral form, or from the centre to each end in right and left hand spirals; while for the heavier classes of work and terry towelling it has a series of sharp iron pins projecting from its surface in order in both instances to ensure a sufficiently positive grip between the cloth G and the roller. In some cases it is covered with card clothing. From the figure it will be observed that the cloth does not pass entirely round the roller F, but that it goes off at a tangent on to the cloth beam H, the latter being suitably supported in slide brackets (not shown) bolted to the framework, and driven by frictional contact with the cloth roller F. When the roller F

happens to be made of badly seasoned wood, it generally warps and becomes untrue, with the result that the

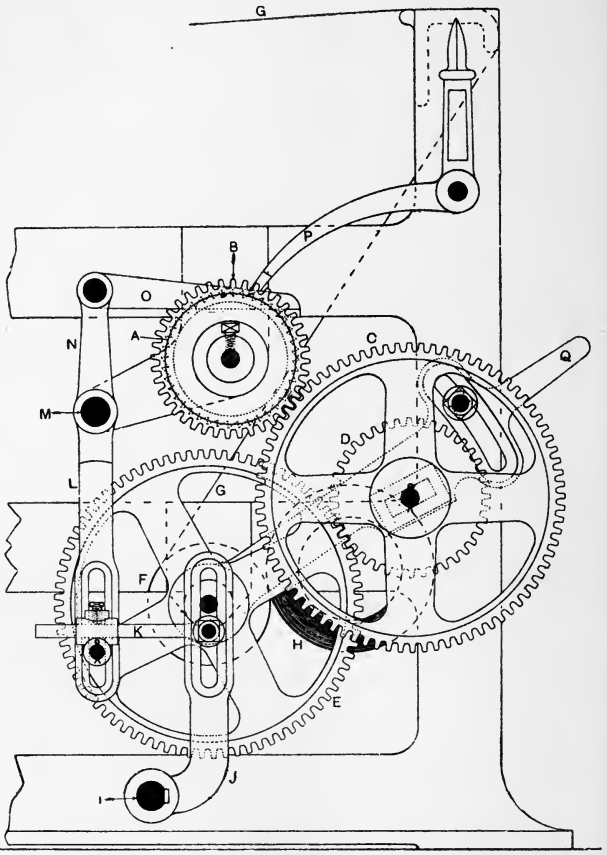

FIG. 212.

shotting of the cloth becomes irregular. To obviate this, and, in addition, to increase its rigidity for heavy work,

and in wide looms, the roller is now frequently a cast-iron tube covered in the same way with spikes.

In motions where only three wheels are used the change pinion B is sometimes geared directly with the roller wheel E. In such cases it is obvious that the direction of rotation of the ratchet wheel A must be reversed, and when the pinion B requires to be changed, it is necessary either to raise or lower the supporting bracket in order that the new pinion may gear properly with the roller wheel E. The unsatisfactory nature of this arrangement is at once obvious, and happily it is fast becoming obsolete. In general, where only three wheels actually comprise the motion, a fourth pinion is introduced between B and E in order to reverse the direction of the motion, and also to obviate the necessity of changing the position of the supporting bracket of pinions A and B when a change of pinion is required. This fourth pinion (termed a "carrier" or "single intermediate") simply conveys the motion from one pinion to another, and changes its direction; it has no effect upon the value of the motion, and therefore must not be included in any calculations.

The motion illustrated is actuated as follows:—Keyed to the rocking shaft I is a slotted lever J, which, through the rod K, imparts a swinging motion to the arm L of the lever fulcrumed on the stud M. To the arm N of this lever a pawl O is attached, which rotates the ratchet wheel A through one or two teeth as desired at each oscillation of the lever. The extent of the movement of the pawl O—as to whether one or two teeth of the ratchet shall be taken—is regulated by the position of the connections of the rod K in the slots of the levers J and L. If the rod K be raised farther from the fulcrum of J, and nearer to that of L, an increase of travel is conveyed to the pawl. The

actual amount of shift necessary when changing the motion from taking one tooth of the ratchet to taking two teeth at a time, is always determined by trial. When adjusting the motion it is necessary to have it so set that the retaining catch P will clear the teeth of the ratchet wheel by about one-eighth of an inch when the lay is full forward. The intermediate wheel and pinion C and D are centred upon a stud in the bracket Q, which is arranged concentrically with the roller E. In some cases the lever L N, the ratchet wheels, and pawls are situated inside the loom framework, and lever L is actuated by a stud which projects from the lay sword; but it is more convenient for the tenter when all the wheels are outside the framework as shown.

If the ratchet wheel A be moving one tooth at a time—*i.e.*, one tooth for each beat of the lay or each shot of weft,—the application of the following formula will give the shotting per inch upon the cloth :—

$$\frac{\left\{\begin{array}{c}\text{Number of}\\ \text{teeth}\\ \text{in ratchet}\\ \text{wheel (A)}\end{array}\right\} \times \left\{\begin{array}{c}\text{Number of}\\ \text{teeth in}\\ \text{intermediate}\\ \text{wheel (C)}\end{array}\right\} \times \left\{\begin{array}{c}\text{Number of}\\ \text{teeth}\\ \text{in roller}\\ \text{wheel (E)}\end{array}\right\}}{\left\{\begin{array}{c}\text{Number of}\\ \text{teeth}\\ \text{in change}\\ \text{pinion (B)}\end{array}\right\} \times \left\{\begin{array}{c}\text{Number of}\\ \text{teeth in}\\ \text{intermediate}\\ \text{pinion (D)}\end{array}\right\} \times \left\{\begin{array}{c}\text{Circumfer-}\\ \text{ence of cloth}\\ \text{roller (F)}\\ \text{in inches}\end{array}\right\}} = \text{shots per inch.}$$

Or generally :—

$$\frac{\text{Product of teeth in driven wheels}}{\text{Product of teeth in driving wheels}} \times \frac{1}{\text{circumference of cloth roller in inches}} = \text{shots per inch.}$$

Substituting common values for the above in the case of certain looms for jute weaving, we have :—

$$\frac{40 \times 80 \times 80}{30 \times 40 \times \underbrace{(5\frac{1}{8} \text{ ins.} \times 3\frac{1}{7})}_{\text{circumference}}} = 13{\cdot}24 \text{ shots per inch ;}$$

and in the case of some looms for linen weaving,

$$\frac{50 \times 90 \times 90}{21 \times 20 \times (5\frac{1}{2} \text{ ins.} \times 3\frac{1}{7})} = 55{\cdot}78 \text{ shots per inch.}$$

If the shots are reckoned by a glass or measure other than one inch, it is necessary to multiply the left-hand side of the equation by the size of the glass or measure, in order to find the number of shots in such unit. Thus :—

$$\frac{\text{Product of teeth in driven wheels}}{\text{Product of teeth in driving wheels}} \times \frac{\text{size of glass or measure}}{\text{circumference of cloth roller in inches}} = \text{shots per glass or measure.}$$

In practice, the approximate constant for any loom may be readily found by multiplying the number of shots per unit measure—inch or otherwise—in the cloth by the number of teeth in the change pinion in work, but, since the accuracy of this method is partially determined by the weight of the fabric being made at the time, and the tension on the warp beam, it is safer to find the constant from the value of the motion. Thus, using the above distinctive letters for the wheels, etc., we have :—

$$\frac{A \times C \times E}{D \times F} = \text{constant number for shots per inch ;}$$

and

$$\frac{A \times C \times E}{D \times F} \times \text{size of glass} = \text{constant number for shots per glass.}$$

The constant number in every case is theoretically and approximately the product of the change pinion in work and the shots per inch, glass or measure.

There are three methods by which the necessary pinion for any required shotting may be found :—

(*a*) By inverse proportion. In the former of the above examples we find that a pinion of 30 teeth gives us 13·24 shots per inch, and we are required to find the pinion for $10\frac{1}{2}$ shots per inch. Since the change pinion is a driver, we shall require to use a pinion with more than 30 teeth, in order that the cloth shall be taken away more rapidly by the roller F, and that the weft threads will be more widely spaced :—

$$10{\cdot}5 : 13\,24 = 30 : x,$$
whence $x = 37{\cdot}83$, or say 38 teeth.

(*b*) By substituting the shotting per inch for the value of the change pinion in the calculation—*e.g.*, required the pinion to give 45 shots per inch with the second motion :—

$$\frac{50 \times 90 \times 90}{45 \text{ shots} \times 20 \times (5\frac{1}{2} \text{ ins.} \times 3\frac{1}{7})} = 26 \text{ teeth for the change pinion.}$$

(*c*) By omitting the change pinion and the shotting from the calculation altogether, and finding by this means the numerical or "constant" value of the remaining parts of the motion as indicated above. This "constant," when divided by the shotting required, gives the change pinion necessary, and conversely, when divided by the value of the pinion, gives the shotting which it will produce. Briefly :—

$$\frac{\text{Constant}}{\text{Shots per inch}} = \text{change pinion ;}$$

or

$$\frac{\text{Constant}}{\text{Change pinion}} = \text{shots per inch.}$$

The constant for each of the given motions is as follows :—

$$\frac{40 \times 80 \times 80}{40 \times (5\frac{1}{8} \times 3\frac{1}{7})} = 397{\cdot}34$$

$$\frac{397{\cdot}34}{13{\cdot}24 \text{ shots}} = \text{pinion of 30 teeth.}$$

$$\frac{50 \times 90 \times 90}{20 \times (5\frac{1}{2} \text{ ins.} \times 3\frac{1}{7})} = 1171{\cdot}49$$

$$\frac{1171{\cdot}49}{21 \text{ pinion}} = 55{\cdot}78 \text{ shots per inch.}$$

In jute weaving it is not uncommon to find the shotting as low as 5 per inch, which would give for the former of the above motions a pinion of practically 80 teeth. As this pinion is too large for the motion, it is usual in these extreme cases to set the pawl O to take 2 teeth of the ratchet wheel A at every oscillation or stroke of the lay. The ratchet wheel is now equal to one of only 20 teeth, as it now makes one full revolution for 20 shots of weft instead of for 40 shots as formerly; hence it must be taken as of 20 teeth in calculating for the change pinion.

In linen weaving, again, the number of picks per inch is often as many as 120, and in such cases the pinion necessary (about 10 teeth) is too small to be workable. A common practice under these circumstances is to disconnect the rod K from the lever J, and to connect it to a crank or eccentric of sufficient throw on the wyper shaft, giving one oscillation of the lever L and the pawl O for every two picks. Since this is equivalent to doubling the size of the ratchet wheel, it now makes one complete revolution for 100 picks, instead of for 50 picks as formerly; the pinion necessary for 60 picks under ordinary circumstances will now give 120 picks per inch.

The necessary parts of a motion of this character are illustrated in Fig. 213, in which the connecting rod K and

lever L are shown as being operated by the eccentric R on the wyper shaft S. Sometimes the eccentric R is replaced by the simple slide motion shown immediately under the eccentric. In this case the block W is fixed to the end of wyper shaft S, while rod K is connected to a pin X on the

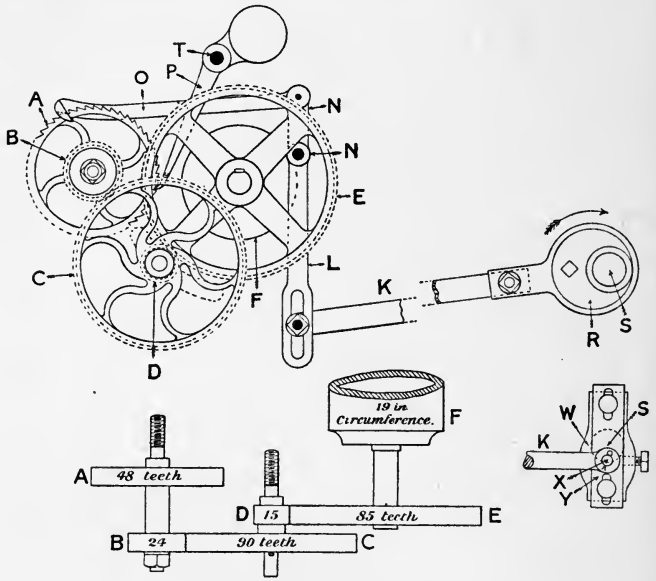

FIG. 213.

sliding block Y. The values of the wheels are different from those given in Fig. 212, but the number of teeth in each wheel is indicated in the distorted plan view of the motion in the lower part of the figure. Theoretically, the practice of connecting rod K with the wyper shaft is objectionable, as the cloth is taken forward only every second pick, but the arrangement is extensively used, and is

found to be quite satisfactory in practice for a large number of shots per inch. One advantage that it has over the above 5-wheel motion driven direct from the lay sword or the rocking shaft is that a greater variation of picks can be obtained. Thus the constant for this motion is

$$\frac{48 \times 90 \times 85}{15 \times 19''} = 1288{\cdot}4, \text{ say } 1288.$$

and it is evident that a pinion of 10 teeth would give $1288 \div 10 = 129$ shots per inch, while a pinion of 11 teeth would give $1288 \div 11 = 117$ shots per inch, if the motion were operated from the lay sword. No theoretical value between 117 and 129 is possible, although in practice certain intermediate values may be obtained in many fabrics by adjusting the weights. By adopting the method of driving indicated in Fig. 213, however, the constant of the motion is doubled, $1288 \times 2 = 2576$, and by using a pinion of 21 teeth it is possible to obtain a mean theoretical value between 117 and 129. Thus, $2576 \div 21 = 123$ shots per inch.

The above benefit derived from using a motion with a high constant is one of the reasons for the introduction of uptake motions with seven wheels, for the introduction of a second pair of intermediate wheels naturally increases the constant, and therefore offers facilities for more variation in the number of shots per inch.

In the 5-wheel motion illustrated in Fig. 213, the retaining pawl P is set-screwed upon rod T which extends across the loom to the weft fork lever. When the latter is pushed forward in the usual manner, on the expiry or breakage of the weft, it causes rod T to oscillate sufficiently, in a counter clockwise direction, to withdraw the retaining pawl P from the ratchet wheel A so that the cloth will not be

drawn forward for the few picks during which the loom may still run.

Some positive uptake motions of the foregoing nature are of the type known as tooth-and-pick ; that is, they are so arranged that the change pinion or wheel in the train is a driven wheel instead of a driver, and that the number of teeth which it contains will represent exactly the number of picks per inch, per half inch, or per quarter inch con-

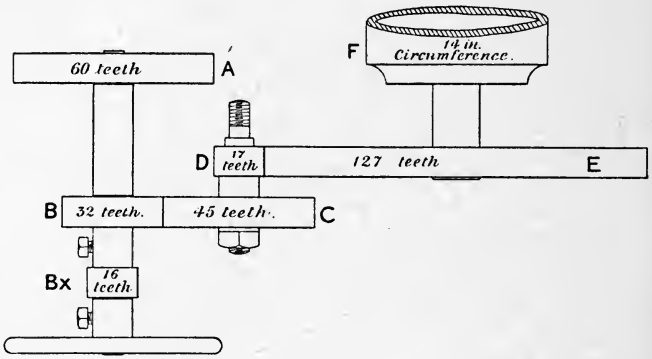

FIG. 214.

tained in the cloth. A distorted plan view of the train of wheels in a motion of this type is given in Fig. 214. The motion is operated in precisely the same manner as an ordinary uptake motion, but changes in the shotting are effected by removing driven wheel C and substituting another wheel containing a different number of teeth. If we introduce into a calculation the number of teeth in the wheels from the ratchet wheel A to the cloth or feed roller wheel E, and also add the circumference of the cloth roller, we obtain the picks per inch ; thus :—

$$\frac{60 \times 45 \times 127}{32 \times 17 \times 14''} = 45 \text{ picks per inch,}$$

and this number is identical with the number of teeth in the change wheel C. In other words, the "constant" value of this motion should be unity, as will be seen by omitting the change wheel and picks from the calculation :—

$$\frac{60 \times 127}{32 \times 17 \times 14''} = \frac{7620}{7616} = \frac{1905}{1904} \text{ or practically unity ;}$$

i.e. $$\frac{60 \times 127}{32 \times 17 \times 14''} = \frac{\text{picks per inch}}{\text{change pinion}}.$$

For fabrics which contain a large number of shots per inch, it is often more convenient to state the shots at so many per half inch : in such cases a pinion B X is substituted for the pinion B, so that the number of teeth in wheel C may represent the picks in half an inch. In a similar manner, the number of teeth in wheel C may represent the number of picks in two inches provided a wheel of 64 teeth be introduced in place of the 32-teeth pinion B.

An example of the continuous type of positive taking-up motion is illustrated in Figs. 215 and 216, this particular arrangement being that adopted in the Hollingworth and Knowles' loom already freely referred to. In order that the motion may be continuous, it is of course necessary that it be actuated from some continually-revolving source by means of toothed gearing or its equivalent. In the case selected for description, motion is conveyed from the vertical shaft A, when the loom is working forward, by the bevel wheels B and C and the clutch D to the horizontal shaft E of the dobby mechanism, the gearing being so arranged that the shaft E makes one revolution for each revolution of the crankshaft, or for every shot of weft. Keyed to the back end of the shaft E is a chain wheel F, of

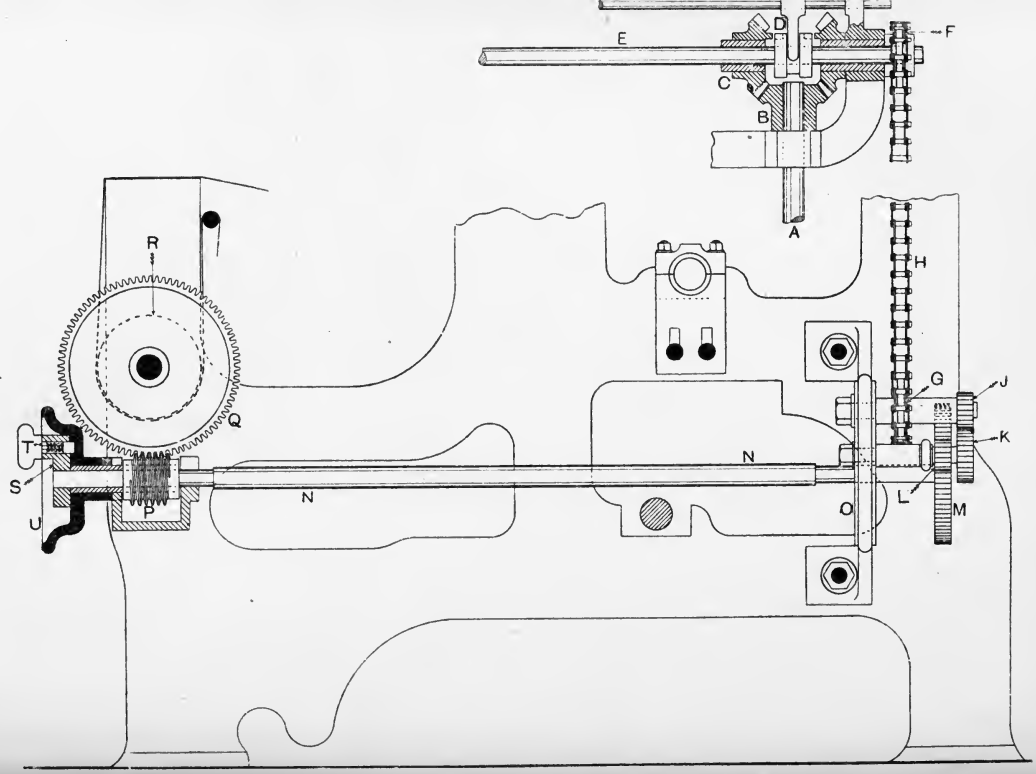

Fig. 215.

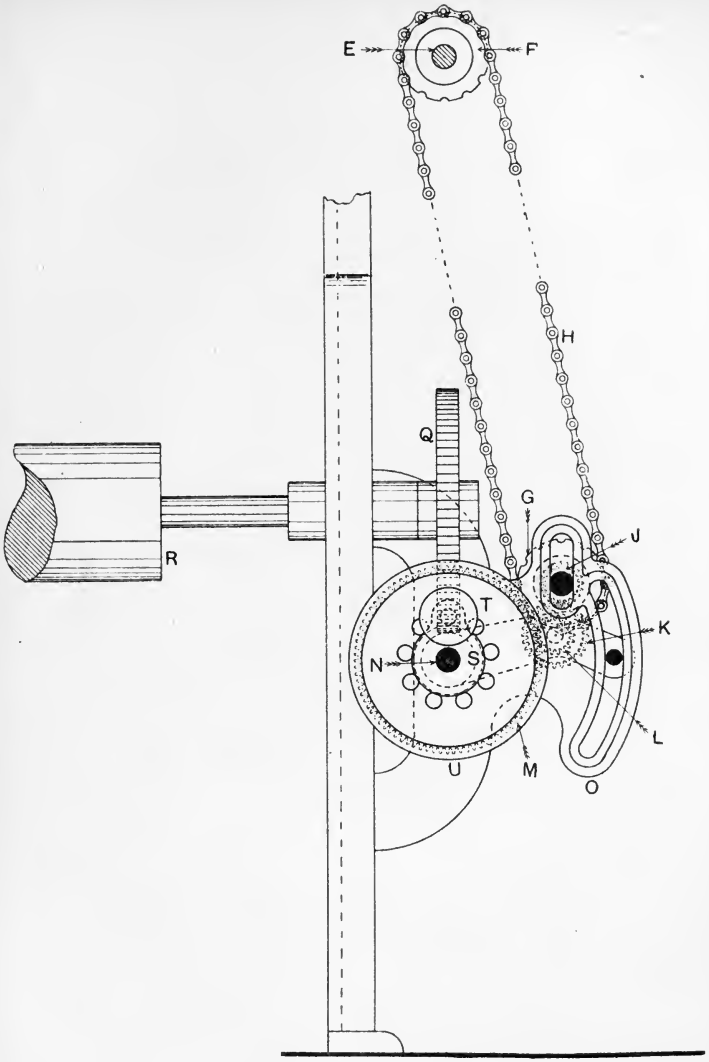

Fig. 216.

8 or 16 teeth, which drives a similar chain wheel G, also 8 or 16 teeth, by means of the pitch chain H. Compounded with the chain wheel G is a pinion J of 20 teeth, which gears with the change wheel K, the number of the teeth of which represents the shots per inch—or a multiple of them—upon the cloth. Compounded with the change wheel K is a pinion L of 18 teeth which drives the wheel M, of 84 teeth, on the horizontal shaft N. The stud supporting the pinions K and L is bolted in the bracket O, which is slotted concentrically with the wheel M to permit of the proper adjustment of larger or smaller change wheels at K. The shaft N extends to the front of the loom and carries near that end a single-thread worm P mounted loosely on the shaft and gearing with the worm wheel Q, 85 or 42 teeth, fixed to the arbor of the taking-up beam R, the latter being about $6\frac{1}{4}$ ins. in diameter. The worm P can be connected with or liberated from the shaft N in the following manner: —Keyed on the extreme end of the shaft N is a cranked piece S, the arm of which is drilled to receive a pin T which enters into one or other of a series of recesses in the face of the crown wheel U, and is held there by the action of a strong helical spring mounted on the shaft of the pin. This crown wheel U, shown in section in solid black in Fig. 220, and in front elevation in Fig. 221, is fixed upon the sleeve of the worm P, which is extended to receive it. Obviously, if the pin T be entered into any one of the recesses of the crown wheel U, the latter, and therefore the worm P, must move together with the shaft N, and the worm wheel Q and the take-up beam R will be rotated. If, however, the pin T be withdrawn from the recess of the wheel U, and rotated a little so that the face of the pin rests against the solid part between any two recesses, the wheel U is disconnected from the shaft N, and may,

with the worm P and the take-up beam R, be rotated at will by hand in either direction. A feature of this motion is that when it is necessary on account of broken weft, or from any other cause, to reverse the shedding mechanism—done manually by the weaver rotating the shaft E in the reverse direction,—the take-up motion is also reversed and cloth is given off at exactly the same rate as it is unwoven.

Since the change pinion K in this motion is a driven wheel, and since the number of teeth in the pinion represents the shotting per inch upon the cloth, when the chain wheels F and G are equal, no calculation is necessary to find the pinion for any required shotting. Assuming, however, that a pinion of 20 teeth is the smallest that can be worked with conveniently, and that it is desired to obtain 15 picks per inch, this can be done by using a pinion of 30 teeth at K and making the chain wheel F double the value, 16 teeth, of chain wheel G, 8 teeth. By this means the speed of the motion will be doubled, as G will make two revolutions for one revolution of F, and the shots per inch upon the cloth will therefore be reduced by half. Or, again, assuming that a pinion of 80 teeth is the maximum that can be worked with at K, and that 160 shots per inch are required, this can be produced by reversing the values of the wheels F and G, making the former 8 teeth and the latter 16 teeth. In this manner the speed of the motion is reduced by one half, and the shots per inch will therefore be doubled, and an 80 pinion will give 160 shots per inch. For certain classes of work, where low shottings rule, the worm wheel Q is made with 42 teeth instead of 85; and, assuming that the chain wheels F and G are equal, this change, which is equivalent to doubling the speed of the take-up roller R, will make the shots per inch equal to only half the number of teeth in the change

wheel K. Any alteration in the size of the chain wheels F or G necessitates an alteration in the length of the chain H, to or from which a few links have to be added or deducted as the case may require.

CHAPTER XVII

BOX MOTIONS

When two or more colours of weft are required in the fabric, it is obvious that the necessary changing of the shuttle may be, and in some cases is, accomplished by hand. But as this primitive method necessitates the stoppage of the loom for every change of colour, production is in consequence materially reduced. Especially is this the case where the changes are of frequent occurrence. In order to obviate this reduced production, and to relieve the weaver of the extra labour and attention, as well as to minimise mistakes in changing, box motions are introduced. These motions are so varied and numerous that it is possible to describe only a selection of the best-known types.

The simplest, and what might be termed the original, drop-box motion for power looms is that shown in Figs. 217 and 218, and is known as the "Diggle's" motion. Movement is imparted from the crankshaft A by means of a spur pinion B of 22 teeth, which gears with the wheel C of 88 teeth. Cast on the inside face of the wheel C is a shell or bead D, which is broken at two points diametrically opposite each other for the insertion of pins E. As the wheel C revolves, the shell D slides on the lobes, and the pins E take into the slots of the star wheel F, and cause it

to be turned intermittently one-eighth of a revolution for

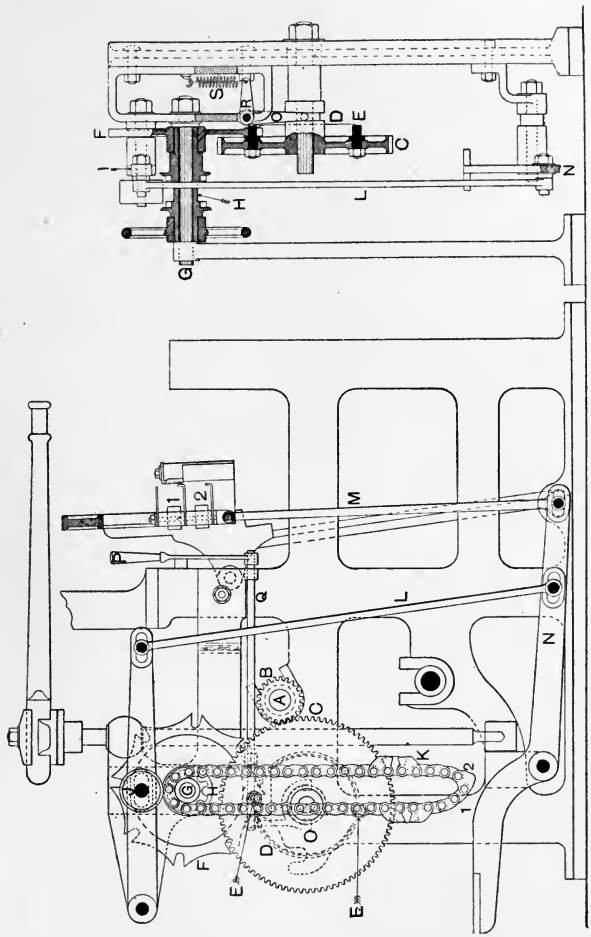

FIG. 218.

FIG. 217.

every two revolutions of the crankshaft. Compounded with the star wheel F is a chain barrel H of eight teeth for

carrying the pattern chain K, the latter being shown only in Fig. 217. This chain is built of links of different heights according to the number of boxes to be actuated. In the example only two boxes are shown, and therefore links of only two different heights are required. As the chain barrel H revolves, the links are brought in regular succession under the anti-friction roller J attached to the lever I. The small links 1 allow the top box 1 to remain at the level of the race of the lay, but when the links 2 are brought under the roller J the second or No. 2 box will be raised to the level of the race by means of the levers and connecting rods I, L, N, and M, as shown. The pegs E are kept in gear with the star wheel F by means of the lever R and spring S, but when necessary they may be withdrawn by means of a handle P and clutch O from the star wheel F, enabling the chain to be turned by hand to any desired position, and retained in the same for any number of successive picks.

This method of producing long patterns necessitates the constant attention of the weaver, and also the frequent stoppage of the loom for the purpose of adjusting the chain. To prevent this loss of time and the constant strain on the weaver, a modification of the above motion has been introduced. This consists principally of a second or auxiliary chain which by means of suitable mechanism permits of the pattern chain K being moved only when a change of box is necessary.

Two views of this motion as made by Messrs. Charles Parker, Sons and Co., Dundee, are shown in Figs. 219 and 220. The mechanism, which directly actuates the shuttle boxes, although differing in detail, is precisely the same in principle as that already described. Thus the star wheel F which carries the pattern chain—the latter is not shown

in these figures—may be rotated intermittently one-eighth of a revolution for every two revolutions of the crankshaft

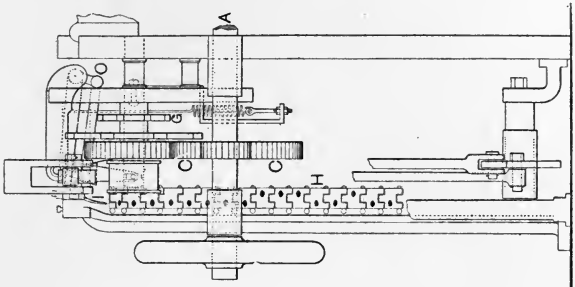

FIG. 220.

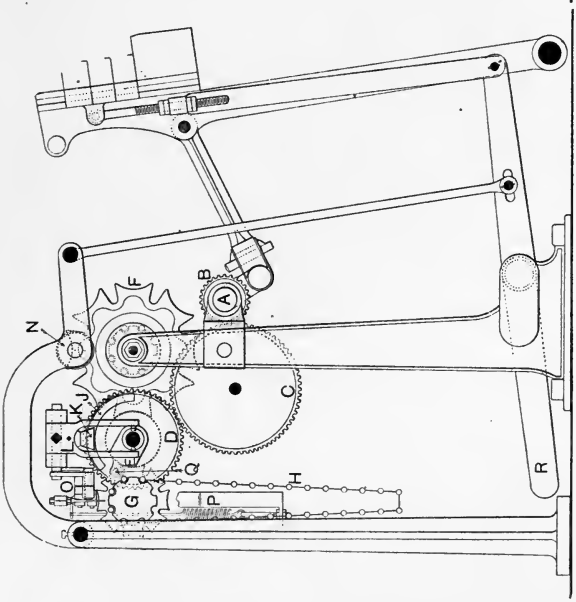

FIG. 219.

A by means of a spur wheel B, carrier wheel C, and pin wheel D. Since the relative values of the wheels B and D

are as 1 to 2, it is obvious that only one pin Q is necessary in the wheel D for the purpose of rotating F. Although the pin Q revolves in unison with the wheel D, it is in this instance capable of being drawn into a recess in D. This is in order to prevent, when necessary, the partial rotation of the star wheel F and the pattern chain. By this means any desired link of the box chain may be retained under the anti-friction roller N for any even number of picks. The method of controlling the movement of the pin Q in the wheel D is as follows :—

The auxiliary chain H, which consists of a series of flat iron links, passes over the chain barrel G, the latter being compounded with a second star wheel. This star wheel is rotated one-eighth of a revolution every two picks by means of a second but fixed pin M attached to the barrel, and the latter bolted to the wheel D. As shown in Fig. 220, the links of chain H may be so arranged as to present either a hole or a blank portion of the link underneath the finger I. This finger is connected by means of the levers O and clutch-fork L to the sliding block E (see Fig. 221), of which the pin Q forms a part. The spring P, Figs. 219 and 220, constantly tends to keep the finger I in its lowest position, and therefore the parts shown in Fig. 221 in the position indicated. When in this position, a portion of the finger I will have passed through the hole in a link of the chain H, and the pin Q will project beyond the inner face of the wheel D, and so engage with and partly rotate the star wheel F. If, however, the solid part of a link in the chain H be presented to the finger I, the latter fails to enter the barrel G, and at the same time the pin Q of the sliding block E is, by means of the levers O and the clutch-fork L, retained in the recess of the wheel D, and the star wheel F remains stationary. It is, of course, necessary that the pin

I be raised above the level of the links of the chain H before the barrel G begins to rotate. This is accomplished through the levers O by means of the bead cam J—cast upon the face of the wheel D—acting upon the anti-friction cone K which is attached to the clutch-fork L. Figs. 222

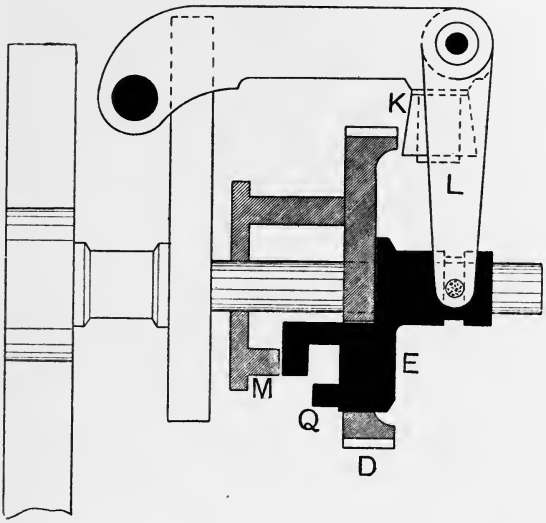

FIG. 221.

and 223 are further views of this motion, while Fig. 224 shows the chief units of it.

Motions of this type are only suitable in cases where the successive shots of each colour are a multiple of two. Since each link of the chain H serves for two shots of weft, it is clear that the number of links employed equals half the number of shots in a round or repeat of a pattern. It will be observed that in the above and similar motions the boxes are raised positively, but fall simply by virtue of

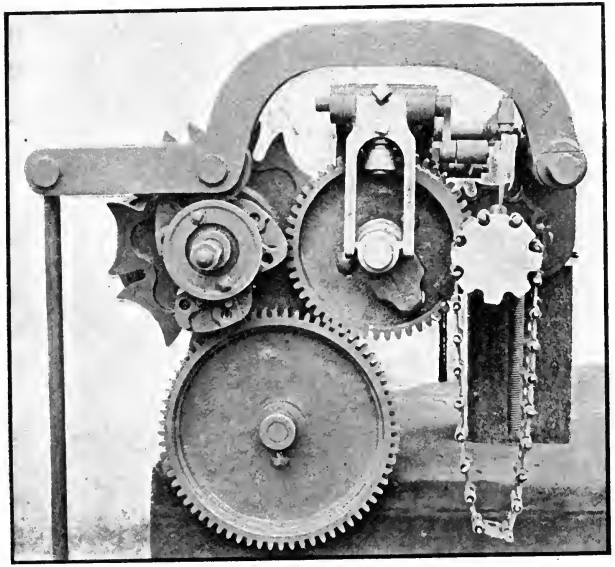

FIG. 222.

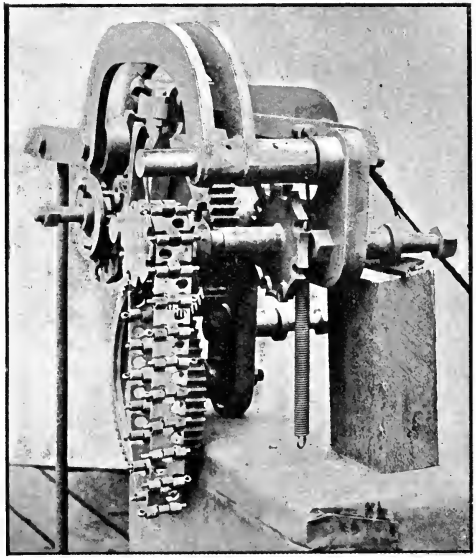

FIG. 223.

their own weight and that of the mechanism attached. This negative method of descent is the great fault of this type of motion, for notwithstanding counterbalance weights added at R, there still remains a tendency on the part of the shuttle boxes to rebound after a fall. When dropping through a distance of three boxes it is practically impossible to prevent this.

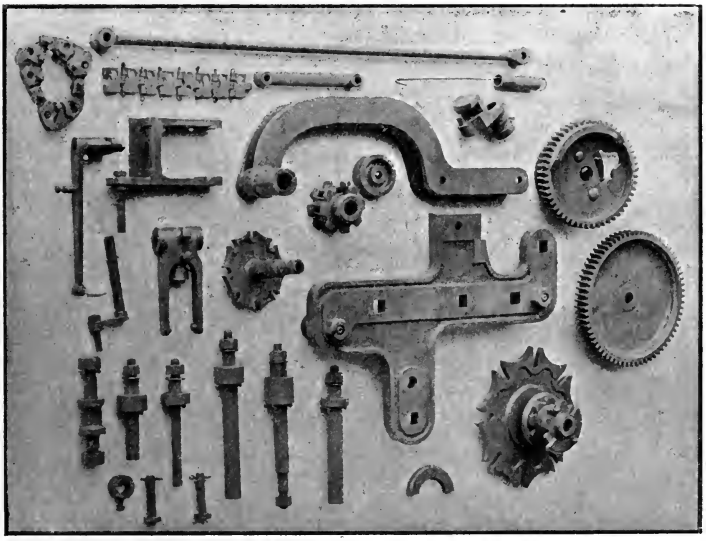

FIG. 224.

As a natural consequence of the tendency of the boxes to rebound when actuated by a motion of the Diggle's-chain type, a high speed in the loom is impossible, and production is therefore kept at a minimum. To obviate these defects it is evident that the boxes must either be positively actuated, or, at least, controlled in their descent as well as in their ascent.

Of purely positive motions there are different types, but that one which seems most worthy of attention is the Whitesmith principle of two or more compounded eccentrics, the one inside the other, each capable of independent movement and of controlling the position of the shuttle boxes proportionately to the extent of its throw. In the case of four boxes, two eccentrics are used, the inner, or smaller, one having a throw equivalent to the lift of one box; and the outer, or larger, one a throw equivalent to the lift of two boxes. By properly operating these eccentrics any one of the four boxes may be brought level with the race of the lay as desired; and due to the fact that the initial mover is an eccentric, the change is accomplished in an ideal manner.

Figs. 225, 226, and 227 show respectively the side elevation, back elevation, and plan of such a drop-box motion as made by Messrs. R. Hall and Sons, Ltd., Bury, while Figs. 228 and 229 illustrate a few details. Motion is carried from the wheel A of 17 teeth on crankshaft B to wheel C of 34 teeth. This ratio of 1 to 2 is necessary owing to the fact that the motion illustrated is arranged for boxes at one side of the loom only. Wheel C, which is keyed to the short shaft D, has two square recesses on one side diametrically opposite to each other, into which fit two corresponding projections E on the disc F. The combination thus effected ensures that disc F will move in unison with the wheel C. Since disc G performs similar functions to disc F and must rotate with it, the nave of F is extended along the shaft D in the form of a clutch to engage with disc G in such a manner that either disc or both may be moved laterally on the shaft without becoming disengaged or ceasing to rotate. A compound eccentric K, consisting of one small eccentric enclosed in a larger eccentric, runs

loosely on stud H. The eccentric strap L, which surrounds the larger eccentric and therefore encloses both, is connected to the shuttle-box lever N, fulcrumed at O, by means of

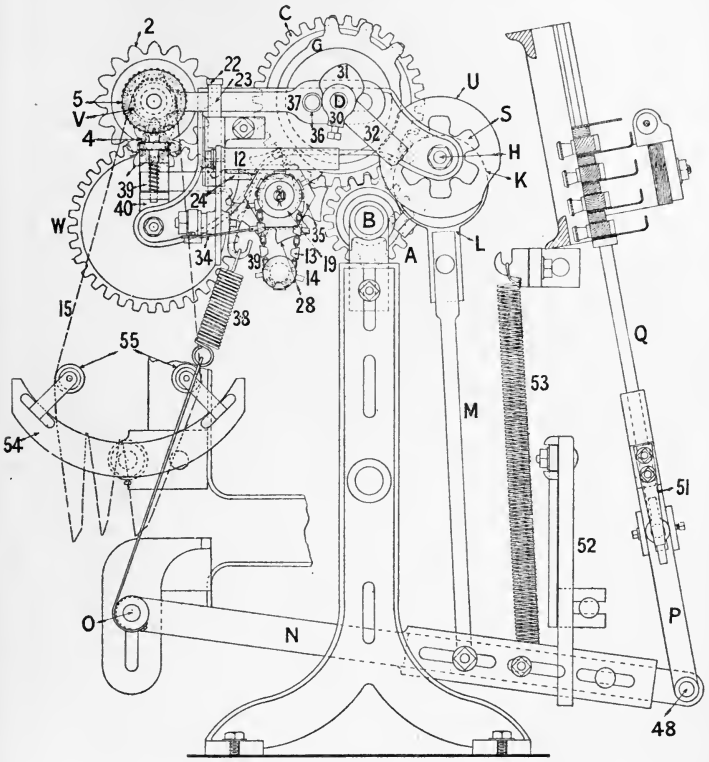

FIG. 225.

rod M, whilst the outer end of lever N is connected to the boxes by means of part P through the safety escapement mechanism and plunger rod Q. The double eccentric K is similar to that illustrated in Fig. 230.

Compounded with the small eccentric is a wheel S of 6 teeth, shown in Figs. 225 and 227; similarly the large eccentric is compounded with wheel R. T and U are the locking plates for R and S respectively, and these locking

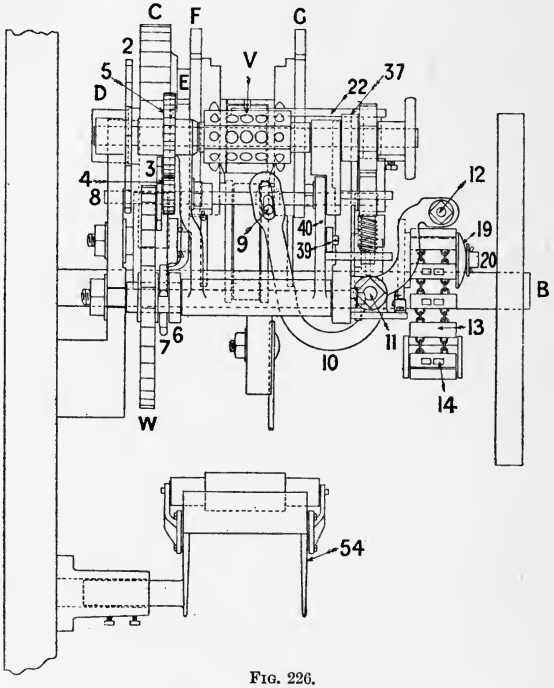

FIG. 226.

plates prevent all motion on the part of the eccentrics except when the teeth of R and S come into contact with the teeth on discs F and G.

V is the pattern card barrel or cylinder, 8-sided as shown, and capable of being driven clockwise or counter-clockwise as desired. It receives its two motions as follows:—The

large spur wheel C drives spur wheel W through intermediate wheel X (shown only in plan, Fig. 227); wheel W contains the same number of teeth as wheel C, and, conse-

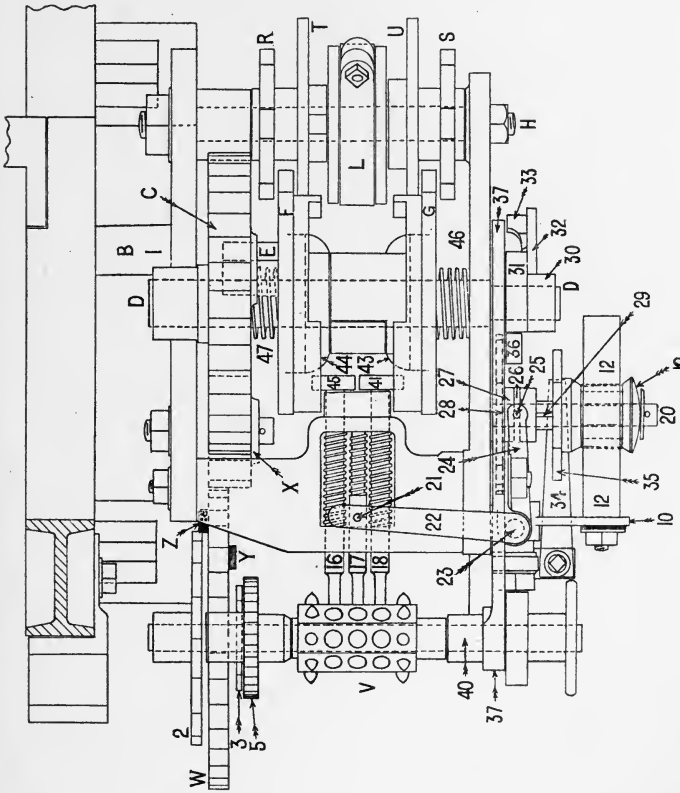

FIG. 227.

quently, makes one revolution for two picks. Projecting from the two faces of wheel W are pins Y and Z; the latter drives cylinder V clockwise directly by means of wheel 2, while the former drives the cylinder counter-clockwise by

means of wheel 3 compounded with pinion 4, which in turn gears with wheel 5 on cylinder shaft. The two directions of motion of the cylinder are resorted to only when it is possible to weave a long pattern with a comparatively short chain, and, of course, in cases where the correct boxes can be brought into line by the reversal of the chains, as for example, in symmetrical patterns and in long lengths of the same colour where a few cards may be rotated forwards and backwards for the necessary number of times. The pegs Y and Z are brought into contact with wheels 2 and 3 by means of clutch (see back elevation Fig. 226), and fork 7 set-screwed on shaft 8. Projecting from shaft 8 is a pin 9 which enters a slot, as shown in the lever 10 fulcrumed at 11, the opposite end of lever 10 carrying a long stud 12 which rests upon, and is governed by, the lags 13 and pegs 14. The normal position of the stud 12 is down, where it remains on the lags in virtue of its own weight and the action of a spiral spring on shaft 8 between the fork 7 and the framework. The stud 12 is lifted from the low position, when desired, by pegs in the lags.

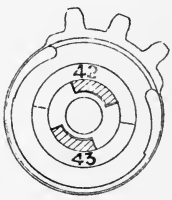

FIG. 228.

Metal cards 15 are formed into a chain, as seen in Fig. 225, and are operated in the desired direction on cylinder V. The cards have to operate three distinct needles, 16, 17, and 18, the middle one 17 being the one which governs the lag cylinder 19 centred on stud 20. Springs on the rear ends of needles 16, 17, and 18 keep them full out unless when pressed backwards by blanks in the cards. A vertical pin 21, fixed to and rising from near the middle of needle 17, enters the end of lever 22 fulcrumed at 23; near the bottom of this short vertical shaft 23 is set-

screwed a lever 24, from the end of which depends a short pin 25 which enters a groove 26 in the boss of the star wheel 28. This star wheel 28 is loose upon the cylinder shaft 20, and a small pin 29, projecting from the face of the boss 27, enters a hole in the hexagonal part 35 of lag cylinder 19, so that when the star wheel is moved the lag cylinder will move also. On the end of shaft D is set-screwed a boss 30 compounded with which is a cam 31 and an arm 32, from the inner face of which projects a pin 33. In the positions shown, the pin 33, while rotating round shaft D, will not come into contact with the star wheel 28. Should a blank in the metal cards 15, however, come opposite needle 17, then the latter will be pressed back, and, through lever 22, shaft 23, lever 24, and pin 25, the star wheel will be drawn into the line of the path of pin 23, and the star wheel 28 will be rotated one-sixth of a revolution, thus bringing forward the next lag under the stud 12. A flat spring 34 presses against the under face of the hexagonal part 35, and this steadies the lag cylinder in much the same way as the spring hammer steadies the cylinder of a dobby or a jacquard. Before turning the cylinder V in either direction, it is first necessary to withdraw it clear of the needles 16, 17, and 18. This is done by the cam 31, on the end of shaft D, pressing against the anti-friction roller 36 on arm 37. One end of arm 37 encircles the cylinder shaft, and, consequently, when the thick part of the cam 31 presses against the anti-friction roller 36, the cylinder V will be

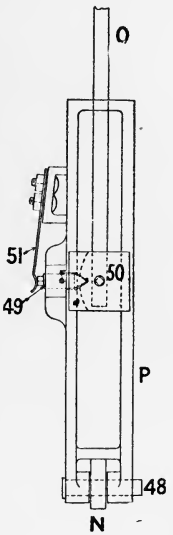

FIG. 229.

forced back and clear of the needles 16, 17, and 18. The spiral spring 38, and the hooked lever 39 attached to upright lever 40, Fig. 225, ensure the return of the cylinder V after the thick part of the cam 31 has passed the anti-friction roller 36. During the time that cylinder V is clear of the needles, either peg Y or peg Z will have rotated the cylinder V one-eighth of a revolution, and brought the next card opposite the needles.

The changing of the shuttle-boxes is accomplished as follows:—As previously mentioned, the two eccentrics K are compounded with the two wheels R and S, of 6 teeth each in this case, and these wheels are moved through half a revolution when required by the 3 teeth formed on the periphery of discs F and G, shown in Fig. 225 and in detached view in Fig. 228. Disc F is brought into line with wheel R when a blank in the card presses needle 16 in; disc G is operated similarly when a blank in the card presses in needle 18. When needle 18 is pressed in, the anti-friction roller 41 on the end comes into the line of the thin part 42, Fig. 228, of a cam cast on the inner side of disc G; as the disc rotates, the gradually increasing thickness of the cam 43 comes into contact with roller 41, hence the disc G is gradually forced outwards until the 3 teeth of the disc come into line with the teeth in wheel S. The latter wheel is then rotated through half a revolution, and the eccentric receives a similar rotation by means of which the shuttle-boxes are raised or depressed one box through rod M, lever N, and rods P and Q. In a similar manner, the large eccentric, which encloses the smaller one and rotates on it, is rotated by the anti-friction roller 45 on the end of needle 16 acting on the cam 44 of the disc F, and bringing the teeth of the latter into contact with those of wheel R. The discs are returned to their

normal positions, that shown in the drawing, by the springs 46 and 47.

The above motion is absolutely positive, and hence an escapement is necessarily provided between the end of lever N and the boxes, Fig. 225. This consists of the following parts, shown in detail in Fig. 229 :—The rectangular part, P, is fulcrumed at 48 on the end of lever N. Fixed at a convenient part of this rectangular frame is a > shaped pin 49 which is held hard against a similar > shaped recess in part 50 by a flat spring 51. The plunger rod Q is set-screwed to part 50, and when working satisfactorily, all move in unison. Should a shuttle be trapped, however, the rectangular part P will still move either up or down, but in doing so the spring 51 yields and allows pin 49 to slip out of contact with the recess in part 50. A forked guide 52 keeps lever N in a vertical plane, while the weight of the boxes is in a certain measure balanced, and the mechanism is to a certain extent relieved, by a spring 53 hooked at the top to the framework, and at the bottom to the lever N. A cradle 54 is provided to support long lengths of cards, and the latter are guided to their proper positions by rollers 55.

The general method of compounding and enclosing the two eccentrics in the strap is illustrated in Fig. 230, which also represents an eccentric motion of a somewhat similar type to the foregoing, but without the reversing motion for the pattern cylinder. The small eccentric T is cast as part of the wheel R, but the large eccentric S is compounded with the wheel Q by a rectangular projection 6, as shown in detached view. This or some similar arrangement is necessary in all such motions in order to permit of free vertical movement on the part of the large eccentric when either S or T is actuated alone. The two wheels Q and R,

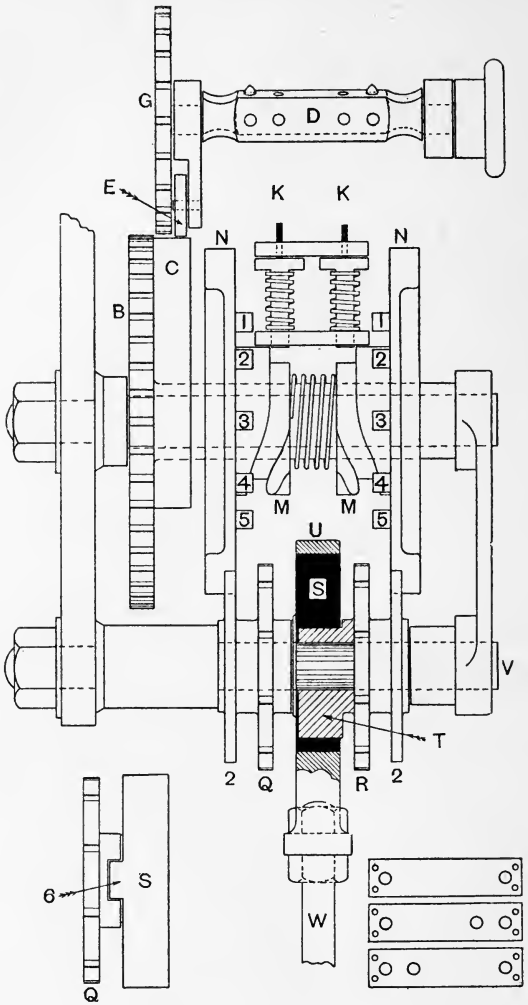

FIG. 230.

and the two eccentrics S and T, are operated when necessary by peg wheels N, the latter being caused to move inwards when needles K enter the grooved cams M as a result of the action of the steel cards carried forward by the card cylinder D. The latter is pushed outwards by the thick part of cam C on wheel B, and partially rotated every second pick by means of 3 wide teeth in B taking into the teeth in wheel G when the cylinder is moving out. The cylinder is returned to the needles by the action of a spring. When a peg wheel N is moved inwards, the projecting pegs 1 to 5 are brought into line and engage with and rotate the corresponding eccentric wheel Q or R, and thus turn the eccentric half a revolution. Locking plates 2 prevent any accidental movement on the part of the eccentrics. The three different kinds of cards for this motion are shown in the detached view in the bottom right-hand corner.

Fig. 231 shows diagrammatically the necessary positions and changes of the eccentrics S and T required to bring the shuttle-boxes 1 to 4 to the level of the race line A B. In the first position the thick portions of the two eccentrics are down; in the second position the small eccentric T has moved half a revolution, lifting up box No. 2; in the third position the eccentric T has returned to its original position, while the thick part of the large eccentric S has moved round, lifting up box No. 3; and in the fourth position the thick parts of the two eccentrics are up, giving box No. 4. In considering the effect of such changes it must be remembered that the large eccentric S utilises the small eccentric T as a shaft round which it revolves.

A comparatively recent development of a motion of the eccentric type is that known as Heyworth's Patent, and made by Messrs. William Smith and Brothers Limited,

Heywood. It is shown in sectional end elevation in Fig. 232, and in front elevation and plan in Figs. 233 and 234

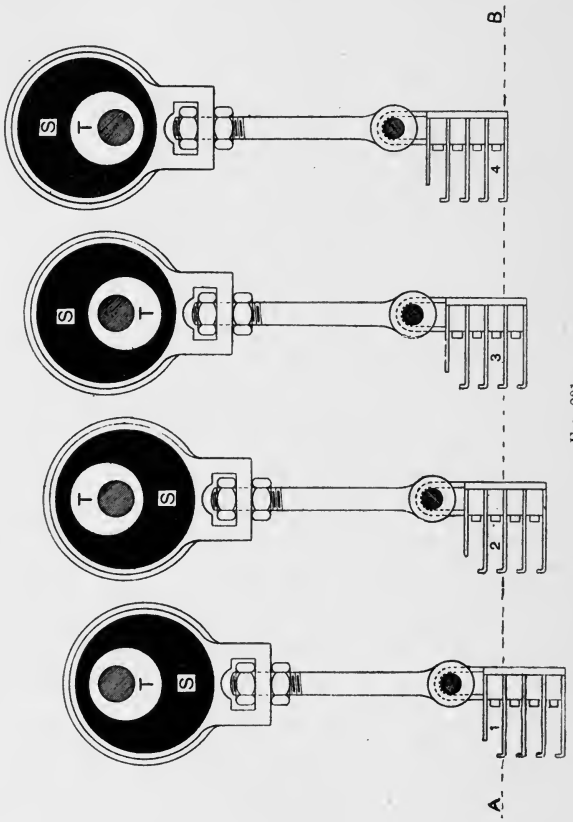

Fig. 231.

respectively. The eccentrics have, for obvious reasons, been omitted from Fig. 233. In this motion the drive is taken from the crankshaft A (Figs. 232 and 233) to the controlling mechanism of the eccentrics by means of equal

wheels B and C of 25 teeth each. The former is set-screwed to the crankshaft A, and the latter, of which the pitch line only is shown in Fig. 232, is compounded with the discs D, D, which rotate loosely on their central stud E and make one full revolution every pick. This method of driving permits the box mechanism to change every pick if desired—an essential feature in looms provided with boxes at both ends of the lay and arranged to pick at will from either end. Wheels B and C are slightly elliptical and are set eccentrically on their respective shafts in order that a variable rate of rotation may be conveyed to the discs D, D. If these discs moved with the uniform velocity of the crankshaft, too little time would be available for the actual changing of the boxes, but by adopting the above arrangement the speed of the discs D, D is very much reduced during the period of actual change, and proportionately accelerated between two successive changes of the boxes. A portion of each disc D, D forms a movable segment F which is carried by its respective lever G, to which a lateral movement may be imparted. The latter is fulcrumed on the stud H bolted to the inner side of its corresponding disc D, and the said segments F, F are retained in the peripheries of their respective discs by the action of the flat springs J, J and a suitable stop not shown.

The extremity of each lever G forms the segment of a toothed wheel and has 5 teeth, the first and last of which are extra thick and strong. Cast on the face of each lever G, G is a cam piece K, K which may or may not be acted upon by the inner end of the needles L, L as the discs D, D and levers G, G are rotated. The needles L, L are supported at the lower end of the pendant arms of the levers M, M. These levers swing upon the stud N and by

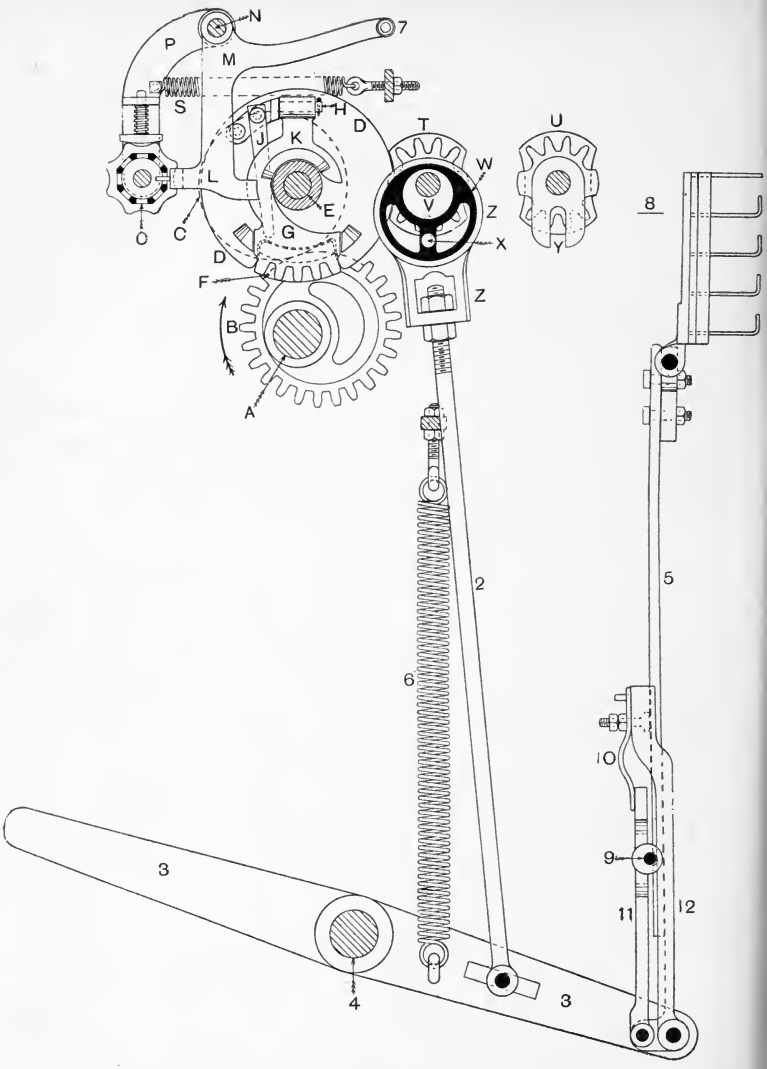

FIG. 232.

gravitation keep needles L, L clear of the cam pieces K, K when not otherwise controlled by the thin metal cards which are carried round by the chain cylinder O. The latter is carried at the extremity of the arms P centred on the stud N, and is pushed outwards, and partly rotated, each pick by the action of a cam cast upon the inside of the toothed wheel Q, the latter being rotated independently of the disc D by a further pinion R, also set-screwed on the crankshaft. Rotation of the card cylinder O is accomplished in the well-known manner by a fixed catch not shown, while O is returned into contact with the needles L, L by the action of spiral spring S. When holes in the card are presented to the needles L, L, the latter enter the cylinder O, as shown in Figs. 232 and 234, and no change of the boxes takes place; but if a blank or solid portion of the card be presented, the needles L, L are pushed backwards and their inner ends interpose in the path of movement of the cam pieces K, K as the latter rotate. Needles L, L are supported against lateral pressure by an inverted Λ-piece 13 (see Fig. 233), but when this lateral pressure is imparted to the curved faces K, K, the levers G, G are moved laterally until segments F, F are clear of the peripheries of their respective discs D, D. This breaks the continuity of the latter and brings the teeth of the levers G, G into the line of action with the teeth cast upon the inside of the locking plates T and U, in the concave portion of which the discs D, D rotate. Further rotation of the discs D, D causes the teeth of the levers G, G to take into the teeth compounded with the locking plates T and U, and to rotate the plates through 180 degrees, the latter being permitted to do so since the continuity of the discs D, D is now broken for that purpose. It must, of course, be understood that either or both needles L, L, and therefore

either or both locking plates T and U, may be operated at will. The small eccentric V is compounded with the

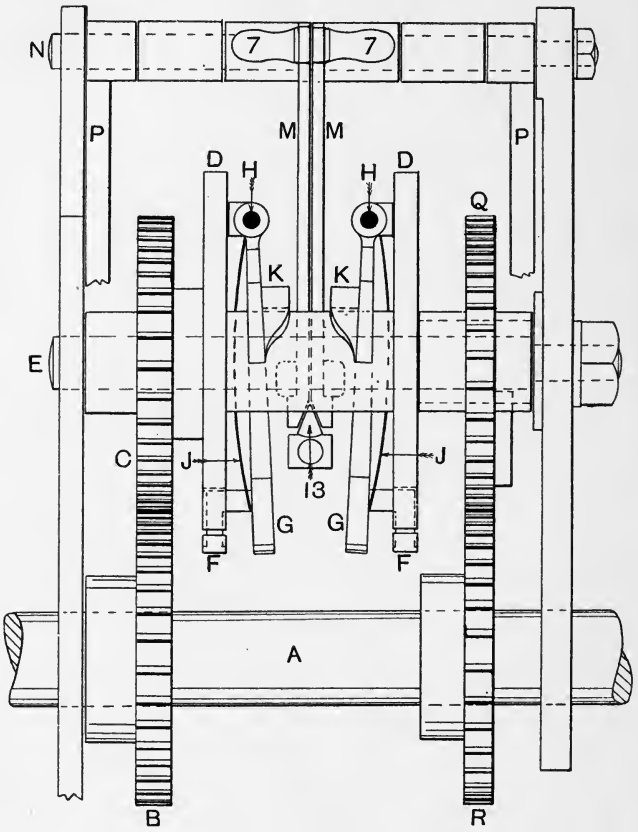

FIG. 233.

locking plate T, but the large eccentric W is actuated by a projecting stud X which enters the slot Y in a special driving piece compounded with the locking plate U.

This arrangement is shown in the detached view Fig. 232, and performs a similar function to that mentioned with reference to detached view Fig. 230.

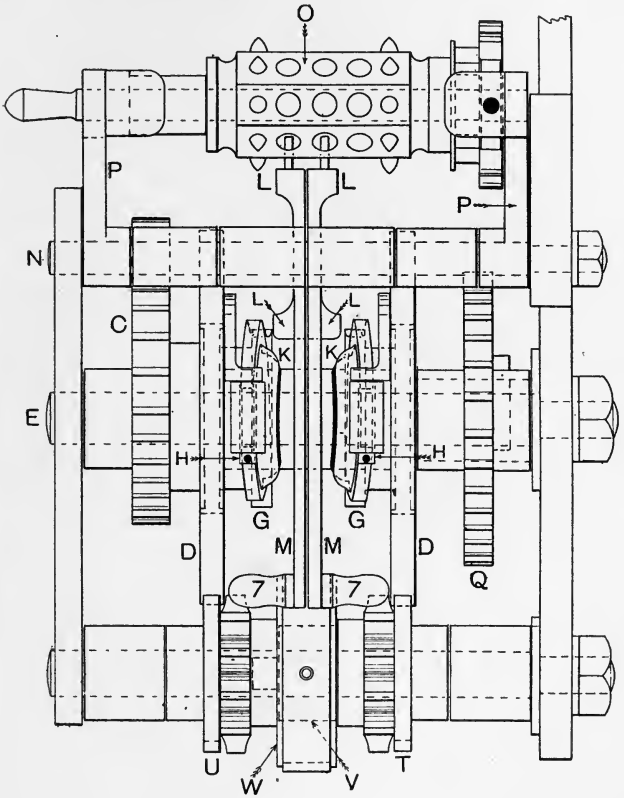

Fig. 234.

Further connections to the boxes are made by eccentric strap Z, rod 2, lever 3 fulcrumed at 4, and, vertical rod 5. Spiral spring 6 assists in counterpoising the weight of the

boxes and thus relieves the eccentrics of a portion of their weight. With boxes at each side of the loom duplicate sets of needles, discs, and eccentrics are required, but all are situated at one end of the loom. Lever 3 in Fig. 232 is mounted loosely on rocking shaft 4; two similar levers are required to impart motion to the boxes at the opposite side, but both are fixed to the rocking shaft 4, one immediately behind 3 and the other in a corresponding position at the other end of the loom.

Only two holes of the card cylinder O are shown utilised by the needles L, L, the third one being available for a similar needle arranged to control the pick-at-will picking motion referred to on page 344, and supplied by the same firm. Knobs 7 on the horizontal arms of levers M, M assist greatly in keeping the needles L, L in the position of inaction, and at the same time afford a ready means of controlling them by hand when it is desired to bring any particular box to the level of the race line 8, 8. In the event of excessive obstruction being offered to the free movement of the boxes—such as a trapped shuttle or the picker failing to clear the boxes in time—connections are broken in the following simple manner. Near the lower end of the box rod 5 a shallow cross groove is cut. The pin 9 is caused to fit firmly in this groove by the pressure of the flat spring 10 on the upper end of the arm 11 in which the pin 9 is fixed. Arm 11 is hinged at its lower end to a projecting part of the standard 12, which in turn is bolted to the extremity of the lever 3. It therefore follows that under normal conditions rod 5, arm 11, and standard 12 move as one piece; but if excessive opposition be offered to the upward or downward movement, the spring 10 yields sufficiently to enable the groove in rod 5 to slip past the retaining pin 9 and thus permit the

eccentrics to complete the full movement without breakage. Further additions may be made to this motion whereby any one or more links of the pattern chain may be brought into repeat operation by reversing the rotation of the pattern chain barrel, thus enabling the length of the pattern chain to be greatly reduced where a constant repetition of pattern is required. The motion may also be modified so that the same card always brings the same box to the level of the race irrespective of the previous position of the boxes.

With this motion a new type of shuttle-box swell is fitted which, while being suitable for single-shuttle looms as well, has the special advantage in a box loom of permitting the shuttle to be wholly in the box before it begins to arrest the progress of the shuttle in the slightest degree. This arrangement reduces to a minimum the possibility of having a trapped shuttle. The swell will be found described under "Warp Protectors," Chapter XVIII., page 492.

Since the eccentrics in all the foregoing motions move in only one direction, it is evident that similar cards presented to the card cylinder will not always produce similar results. This fact creates a difficulty in the building up of pattern chains for the motion, since it is always necessary to consider the previous positions of the eccentrics and boxes.

Messrs. Hacking and Co., Bury, have, however, successfully overcome the difficulties of chain building in connection with eccentric box motions of the following type. By the addition of a few simple parts they so control the movements of the main needles, and therefore of the eccentrics, that the presentation of the same or similar card always results in the same box being brought to the level of the race.

In its essential features the new motion is identical with

that referred to in connection with Fig. 230, although the arrangement of the parts is slightly modified to accommodate the additional mechanism. In the new motion, the chief parts of which are shown in elevation—part sectional and part detail—in Fig. 235, the boxes, 4 in number, are situated to the right of the parts shown, and are controlled in the usual manner through eccentric rod W. This rod is attached to one extremity of the bottom lever, the plunger rod for the boxes is attached to the other end, and the fulcrum of the lever is between the two connections. This will be seen clearly by considering Fig. 236, which, although the opposite hand to that illustrated in Fig. 235, will enable the reader to understand the positions and functions of the various parts. With the connections to bottom lever as shown in Fig. 236, the eccentric rod is in tension when acting against the powerful spiral spring, whereas in those motions illustrated in Figs. 225 and 232, the rod is in compression in similar circumstances and must therefore be a little thicker.

In Fig. 235 only one cam M with its corresponding peg wheel N is shown—that one controlling the large eccentric. This permits the sleeve extension 7 of the nave of the wheel B to be shown in section, and the coiled spring 8, which tends to keep the cams M apart, to be seen in elevation. The large eccentric S is seen without obstruction, while the small eccentric is dotted behind its locking plate 2 and its star wheel R of 10 teeth.

The drive of this motion is obtained in much the same way as that shown in Fig. 225. Pinion A of 18 teeth is keyed to the crankshaft and drives, through the medium of an intermediate pinion, which is useful to change the motion slightly as to time, the stud wheel G of 36 teeth. The latter thus makes one complete revolution every two

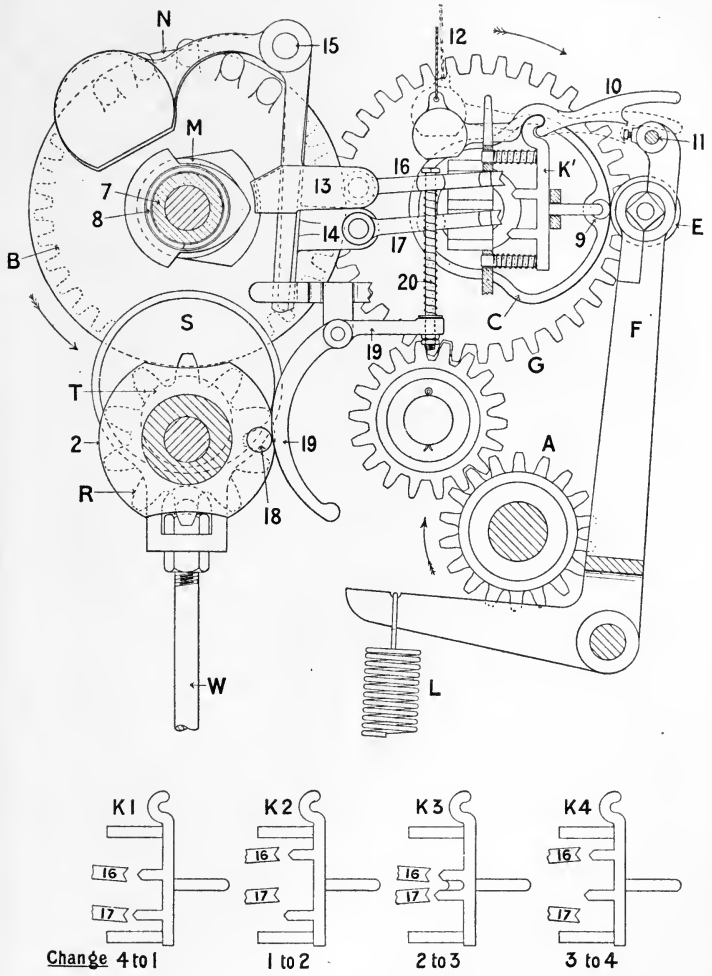
N
15
12
10
11
M
16
K'
7
13
8
14
17
9
E
B
20
C
F
S
19
G
T
2
19
A
R
18
W
L
K1
K2
K3
K4
16
17
Change 4 to 1
1 to 2
2 to 3
3 to 4

FIG. 235.

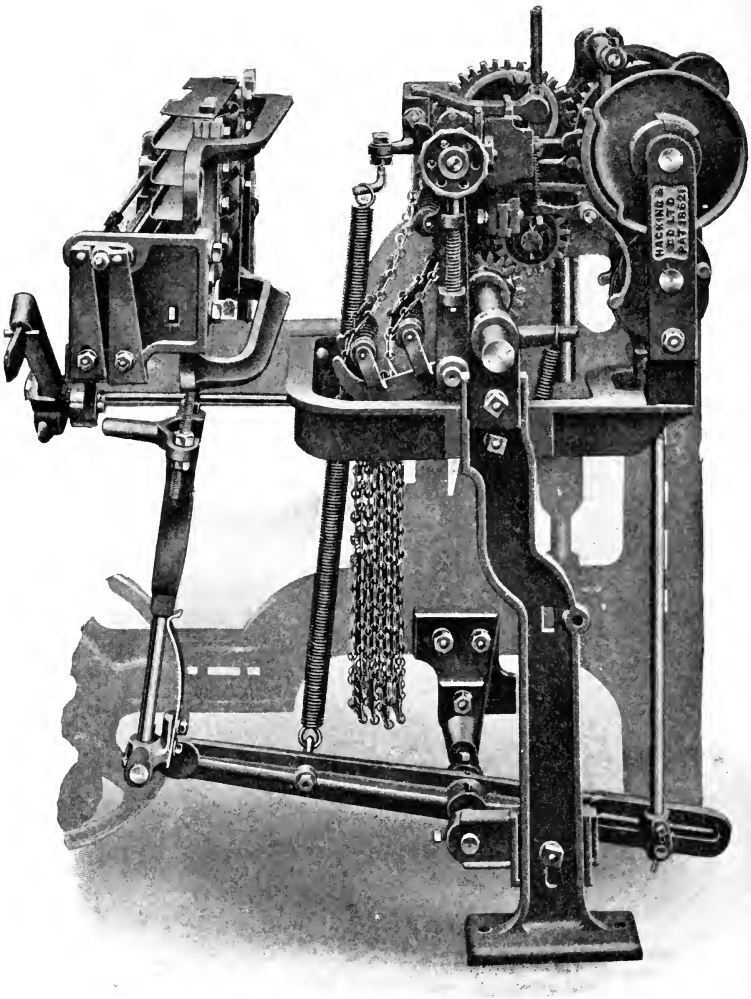

Fig. 236.

picks, and imparts a similar and equal movement to the cam wheel B of 36 teeth. Cam C is cast on the face of wheel G, and, as the latter rotates, pushes out the card cylinder arms F by pressure on the anti-friction roller E. Just before the cylinder reaches the position indicated on the drawing, stud 9, projecting slightly from the side of the cam, engages with one of the recesses of a four-lobed star wheel on the cylinder spindle, and thus moves the cylinder through a quarter of a revolution. This brings the cards in regular succession opposite the needles. Neither cylinder nor star wheel is shown in the illustration; they are unnecessary when the motion is arranged, as in this case, to work from a dobby or a jacquard through the levers 10 and spindle 11. The latter is moved inwards with the cylinder frame F under the influence of spring L as the cam C revolves and presents its reduced radius to the roller E.

Four needles K are provided, one for each box, as shown in detail at the bottom of Fig. 235, although only one, K^1, is shown in its working position. Similarly, four levers 10 are necessary, each controlled by its corresponding cord 12 from a lever of the dobby or a hook of the jacquard. Each needle K is provided with two pointed projections at the back, the top projection for actuating the controlling needle lever 13 of the small eccentric, and the lower projection for the controlling needle 14 of the large eccentric. These needles are fulcrumed on the stud 15, and, in virtue of their weighted arms, naturally tend to be in the inoperative position as far as the cams M are concerned.

Each needle lever is, however, provided with a horizontal pivoted extension 16 and 17, the free end of which is concaved as shown, and is broad enough to be acted upon by any one of the four needles K.

Each extension piece is also so controlled that it may occupy a high plane or a low plane according to the positions of the eccentrics and their locking plates for the time being. Since eccentric rod W and the plunger rod for the boxes are at opposite ends of the bottom lever, it follows that both the eccentrics will be at the top dead centre of their movements when the boxes are in their lowest positions with No. 1 box, the top one of the four, level with the shuttle race. This is the position indicated in Fig. 235, from which it will also be seen that at the same time locking plate 2 of the small eccentric will be in such a position that stud 18, cast upon the side of the locking plate, will have acted upon lever 19 in such a manner as to lift extension piece 16 to its high position through the medium of pin and spring 20. In a similar manner the needle extension 17 is raised to its high plane by a similar pin and spring, and lever actuated by a corresponding stud on the side of the locking plate of the large eccentric. To prevent confusion of the diagram, no attempt has been made to show these parts. Should either or both eccentrics be turned to the opposite dead centre—when of course the boxes would occupy an entirely different position—the corresponding extension or extensions 16 and 17 would occupy the low plane. As at present situated, however, it is clear that, although the needle K^1 be pressed inwards by the card cylinder directly or through bar 11 acting upon lever 10, neither eccentric will be actuated since the pointed projections at the back of K^1 will pass under the ends of their corresponding needle extensions. On the other hand, should needle K^2, K^3 or K^4 be pressed inwards, it is equally clear that in the first case, see K^2 in detached view of Fig. 235, the top projection would act upon needle extension 16 and so bring the small eccentric

into action to bring box No. 2 level with the race. At the same time the stud 18 would rotate through 180 degrees and extension piece 16 would drop to the low plane, see K^3 in detail view. If at this time needle K^3 be pushed inwards, it is evident that both of its projections will act, since extension 16 is now in the low plane, while extension 17 is still in the high plane. This will put both eccentrics into motion, and so bring box No. 3 level. At the same time extension 16 will again resume the high position, while extension 17 will drop to the low position, see K^4. Let us now suppose that needle K^4 is pressed inwards. Obviously the top projection only will act since extension 16 is in the top position opposite its needle, and extension 17 is dropped clear of its needle. The small eccentric only will therefore be put into motion, and the boxes changed from No. 3 to No. 4 as desired. This change will again cause extension 16 to drop and to occupy its low plane along with extension 17 as at K^1 in detail view. If while in this position the needle K^1 be pushed inwards, then both of its projections would act, and both eccentrics would rotate, and the boxes change from No. 4 to No. 1, and at the same time both extensions 16 and 17 would again be raised each to its high plane.

In a similar manner it might be shown that no matter what position the boxes may occupy, and no matter what change they are desired to make, the parts indicated are so arranged that if the corresponding needle K be pressed inwards that box will be brought level with the race. Should that box already occupy the level position, then no movement takes place although the needle be operated.

The levers 10 may be readily removed when the box pattern is in chain form on its own special cylinder as illustrated in Fig. 236, but, when the boxes are controlled

from a dobby or a jacquard, these levers are raised by the shedding mechanism at their heavy ends, and swing about the head of the needle K until the recess of their free ends interpose in the path of bar 11 as the latter travels inwards. This is shown by the dotted position of 10. This principle of 1 card 1 box can be applied by Messrs. Hacking and Co. to the Eccles Box Motion illustrated in Figs. 241, 242, and 243.

The Anderston Foundry Motion.—Box motions embodying the central features of the Whitesmith principle of compounded eccentrics are fairly numerous, on account of their general utility and reliability, and their smooth or easy action at comparatively high speeds. These facts constitute the chief reason, if excuse were needed, for the introduction of a further motion of this general type. This particular motion is the production of the Anderston Foundry Co. Ltd., Glasgow, and, as made and illustrated, is capable of working at 140 picks per minute on a pick-at-will loom, although higher speeds may be obtained when the motion is applied in a modified form to alternate picking looms with boxes at one end only.

Fig. 237 gives a general view of the motion as arranged for control by a dobby or jacquard shedding mechanism, while Figs. 238 to 240 show detail and sectional views of the mechanism. Instead of two eccentrics being employed, as in the motions already referred to, only one eccentric is used, but it is combined with a crankpin of suitable throw which takes the place of, and is operated in the same manner as the large eccentric of the other motions. Variety in the motion lies in the method employed for bringing the eccentric and crankpin into action, and its good features are the general simplicity, solidity, and strength of the parts.

Motion is derived from the wyper or low shaft A of the loom to which the boss B, Fig. 240 in detail, is securely

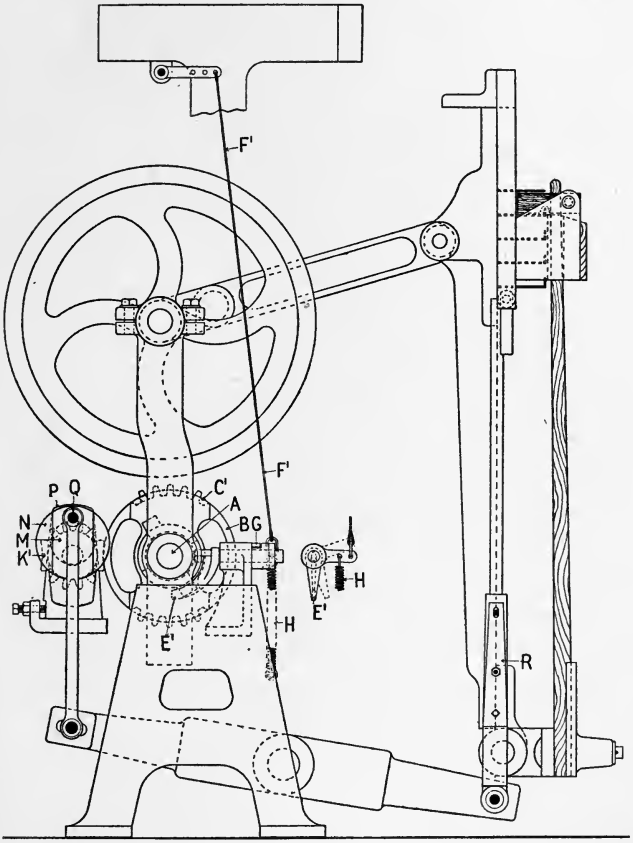

FIG. 237.

fixed. The boss is arranged to compound with and rotate two segmental pieces C and C^1, one being arranged at each

side of the boss B for the small eccentric and the crank-pin respectively. Each segmental piece C C^1 is capable of lateral movement on the wyper shaft as required, and is provided with 5 projecting teeth arranged at two diametrically opposite points in its periphery to enable it to act twice for every revolution of the wyper shaft, or once for every revolution of the crankshaft. Side extensions of the segmental pieces are also provided in which two cam grooves D are formed, and by which the lateral position of the piece itself may be changed. Immediately in front of the wyper shaft, that is nearer the front of the loom, are two curved indicating or selecting levers E E^1, which are supported in such a way that an extended portion of their working centres projects into one or other of the cam grooves D referred to, and so retains the corresponding segment in its lateral position for the time being. A second arm of the selecting levers projects at right angles to the curved arm, and is attached by a cord or wire F F^1 to a controlling hook of the dobby or jacquard. Each selecting lever is strictly limited as regards the extent of its movement by a stop projection G cast upon its supporting bracket. For this reason a helical spring is usually introduced into the connections between the jacquard hook and the selecting lever. A further spring H always ensures that the selecting levers E E^1 will be in the positions indicated when not acted upon by the jacquard or dobby. When in this vertical position it is clear that they will remain in the outer cam grooves D of the segment pieces C C^1, and that these will therefore be moved towards each other and remain in the position shown in Fig. 238 so long as the levers E E^1 are not lifted by the shedding mechanism.

Referring now more particularly to detail in Fig. 238,

which represents a sectional view of the motion from the back of the loom, it will be seen that the teeth J, J of the eccentric and crankpin star wheels K K^1, with their corresponding locking plate portions are not continuous in one vertical plane, but that one locking plate—the one in action for the time being—with the four lower teeth J are in one plane, while the other locking plate with the four upper teeth are in another vertical plane. These two

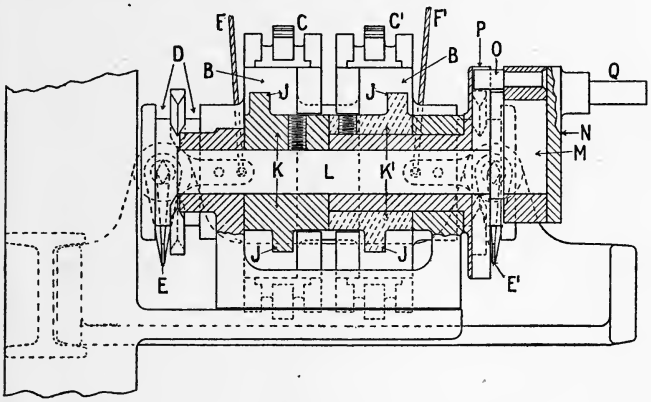

FIG. 238.

planes coincide with the two lateral working positions of the teeth of the horizontal pieces C, C^1, and thus reduce the necessary movements of these pieces to a minimum. If the teeth of the star wheels were arranged continuously in one plane it would be necessary to advance and to withdraw the segmental pieces every time a change of box was necessary; but with the arrangement shown it is clear that, if the cord F be raised and the curved arm of the lever E tilted over to enter the inner cam groove D of the sliding piece C, the latter will be withdrawn until its five rotating

teeth coincide with the upper four teeth of the star wheel K, that the latter will be rotated, and that the four lower teeth will be rotated into the position of inaction if the segmental piece C is retained in its new and outer position. To ensure this the cord F must be raised every pick during which no change of the eccentric is required. Star wheel K is secured to spindle L by set screw as shown, and thus turns the small eccentric M directly. The latter has naturally the throw necessary for the movement of the

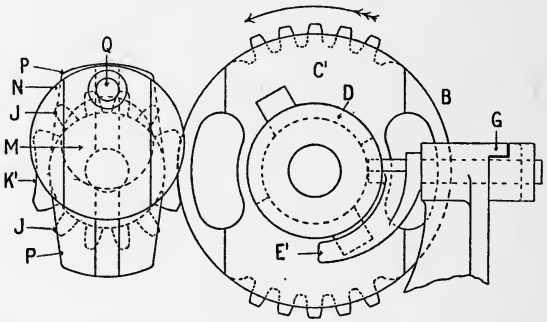

FIG. 239.

shuttles the depth of one box, and is encircled by the crank-pin disc N, which may move the shuttles the depth of two boxes, and which is rotated by means of a projecting stud O. The latter enters a vertical slot in the rotatable plate P, the nave of which is centred loosely on the spindle L, and may be rotated with the star wheel K^1 to which it is set-screwed. Cord F is the means by which the crankpin Q may be caused to rotate from one dead centre to the other, and it is worthy of notice that, whenever these cords are not raised, and the levers E E^1 return to their normal positions as shown, the eccentric M and the crankpin Q also

return to their normal positions, and the boxes drop till No. 1 or the top box is level with the race. This is obvious since dropping the cords places the curved arms of E E^1 in their outer grooves, and throws both segmental

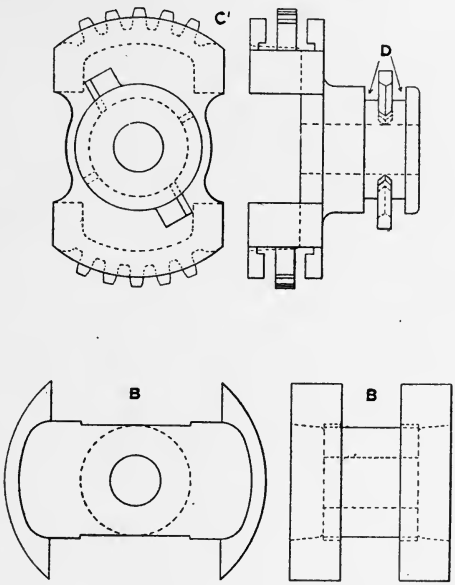

Fig. 240.

pieces C C^1 to the inner position. The usual type of escapement motion is provided at R.

The Eccles Box Motion.—Figs. 241, 242, and 243 are respectively side elevation, back elevation, and plan of the Eccles box motion as made by Messrs. William Dickinson and Sons, Blackburn, and Fig. 244 shows a few details of the mechanism. Motion is imparted from the low shaft A by eccentric B, which, through rod C, oscillates lever D

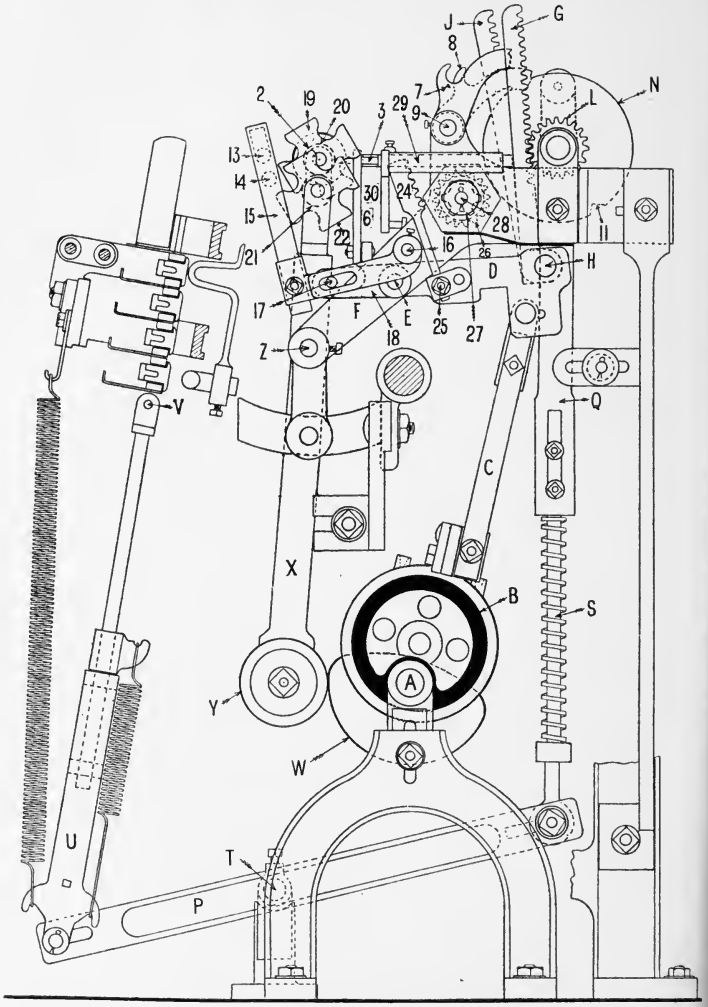
J
G
8
N
2
19
20
3
29
7
9
L
13
14
30
24
15
6'
28
21
22
16
26
H
D
17
F
E
25
27
18
Z
Q
V
C
X
B
S
A
Y
W
U
T
P

FIG. 241.

fulcrumed at E on the framework F. The shaft E extends to the other side of the motion. Rack G is supported at H, while rack J is supported in the same plane at K, see Fig. 242. The two racks G and J operate when required wheels L and M. These two wheels are compounded with disc plates N and O, and the connections between the disc plates N and O and lever P are made by parts Q, R, and S. Lever P is fulcrumed at T, and its opposite end is attached to the plunger rod U, which in turn is connected at V to the boxes.

On shaft A, and immediately behind the eccentric B, is setscrewed a cam W, which gives motion to lever X through anti-friction roller Y.

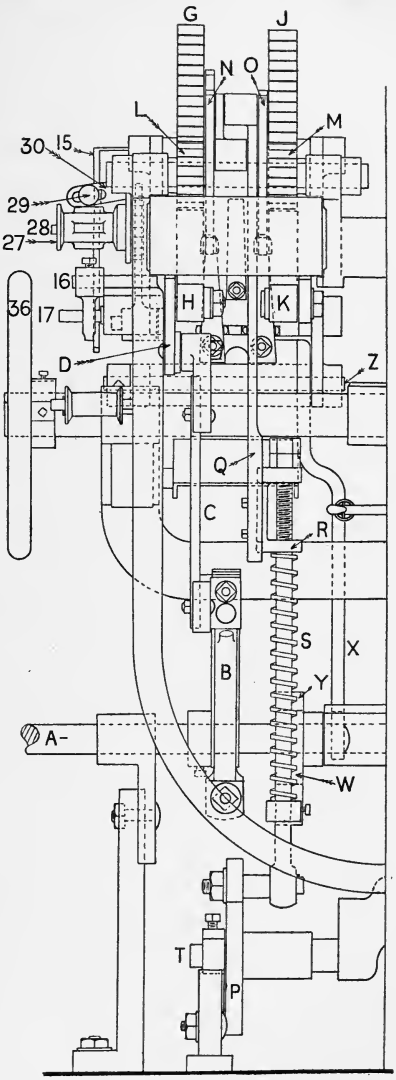

FIG. 242.

Lever X is fulcrumed at Z, and above this point possesses two arms, see Fig. 244, the extremities of which support the cylinder 2. It will thus be seen that as shaft A rotates, the cylinder 2 will be moved towards the needles 3 every two picks; a spring attached to the lower arm of lever X and to the framework keeps the roller Y in contact with the thin part of the cam W, and, hence, serves to withdraw the upper arm of the lever X and cylinder 2 from the needles. The needles 3 are supported at the end nearest the cylinder by the needle plate 6, and at the other end they pass through and are supported by the framework.

The back extremities of needles 3 and 5 are blunt and impinge against the backs of racks G and J, see Fig. 244, while the racks are kept in close touch with the ends of the needles by spiral springs—the normal or inactive position being that shown by rack J, Fig. 241. From Fig. 243 it will be seen that needles 4 and 5 have entered the cylinder, but needle 3 has been pushed back by a blank in the metal card. This action of needle 3 has clearly pushed rack G into close contact with wheel L, see Fig. 244. When the racks are full back, *i.e.* in their position of rest, the discs N and O are kept perfectly stationary by means of V-shaped projections 10 on locking levers 7 and 8 fulcrumed at 9. These projections fit into one or other of two corresponding V-shaped recesses 11 in the discs, and these recesses are diametrically opposite to each other.

It is essential that the locking levers should be withdrawn from the discs before the racks come in contact with disc wheels L and M. When a card presses back one of the outer needles, say 3, Fig. 244, the recess 12 in the needles, see detached view, pushes the lower arm of lever 7 to the right, and thus raises the V-shaped part 10 clear of disc N before the rack G reaches the wheel L.

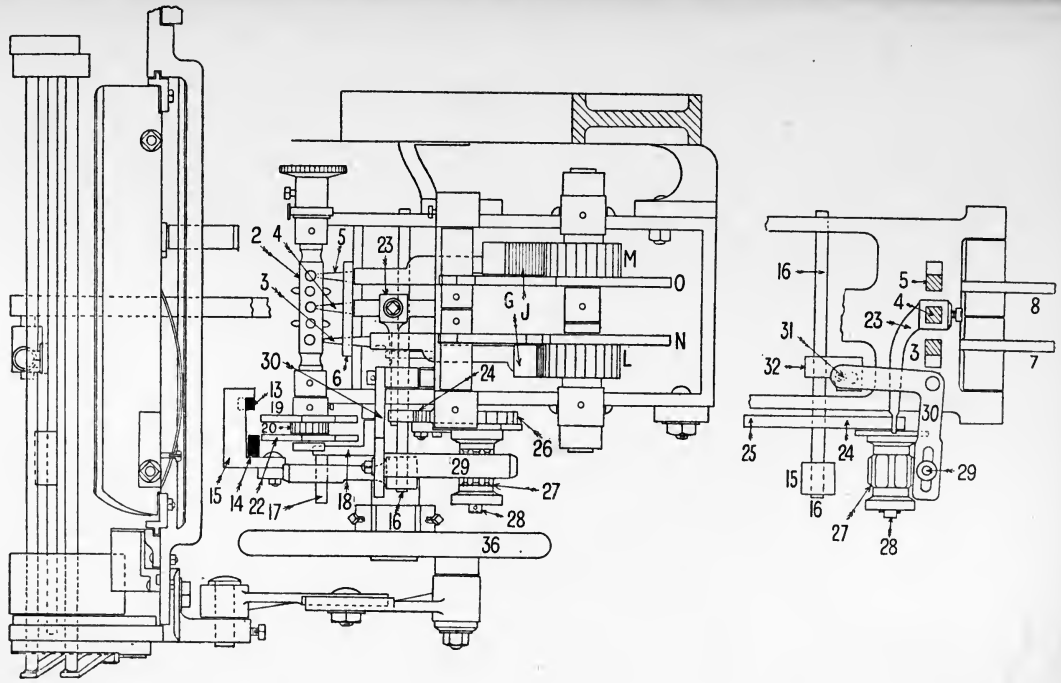
2
4
5
23
3
M
O
G
J
N
L
30
6
24
13
19
20
26
29
27
15
14
22
17
18
16
28
36
16
5
4
23
8
31
3
32
7
30
25
24
15
29
16
27
28

FIG. 243.

For short lengths of cards the cylinder 2 moves in the normal direction, *i.e.* clockwise in Fig. 241, but when it is necessary to weave patterns which are very long and symmetrical, as mentioned in connection with Figs. 225 to 229, provision is made for moving the cylinder alternately clockwise and counter-clockwise. In both cases it receives its motion directly from pins 13 and 14 which project from the long and short arms of L-shaped lever 15 fulcrumed at 16, while the lever 15 is in turn raised and lowered through the medium of a slot in its lower arm, and a pin 17 projecting from the short arm 18 set-screwed on and oscillating with shaft E.

At the end of cylinder 2 is set-screwed star wheel 19 and pinion 20. These are compounded, and the wheel 20 gears with wheel 21 to which is compounded star wheel 22. When the cylinder is moving clockwise, pin 14 enters one of the slots in star wheel 22 and rotates it counter-clockwise, but the connection between wheels 20 and 21 results in wheel 20, and therefore star wheel 19 and cylinder 2 being rotated clockwise.

To reverse the cylinder, *i.e.* to rotate it counter-clockwise, pin 13 and wheel 19 must be brought into line and contact, at the same time withdrawing pin 14 from line of star wheel 22. This is accomplished in the following way :—The middle needle 4 is pressed back by a blank in the card. Bracket 23, see also detailed view in Fig. 243, is set-screwed to needle 4, and therefore moves with it ; the end of the long arm of this bracket presses small rack 24, fulcrumed at 25, Fig. 241, into contact with wheel 26, and as the rack moves downwards in unison with arm D on eccentric rod C, it follows that the pilot chain cylinder 27 on stud 28 will be rotated one-sixth of a revolution.

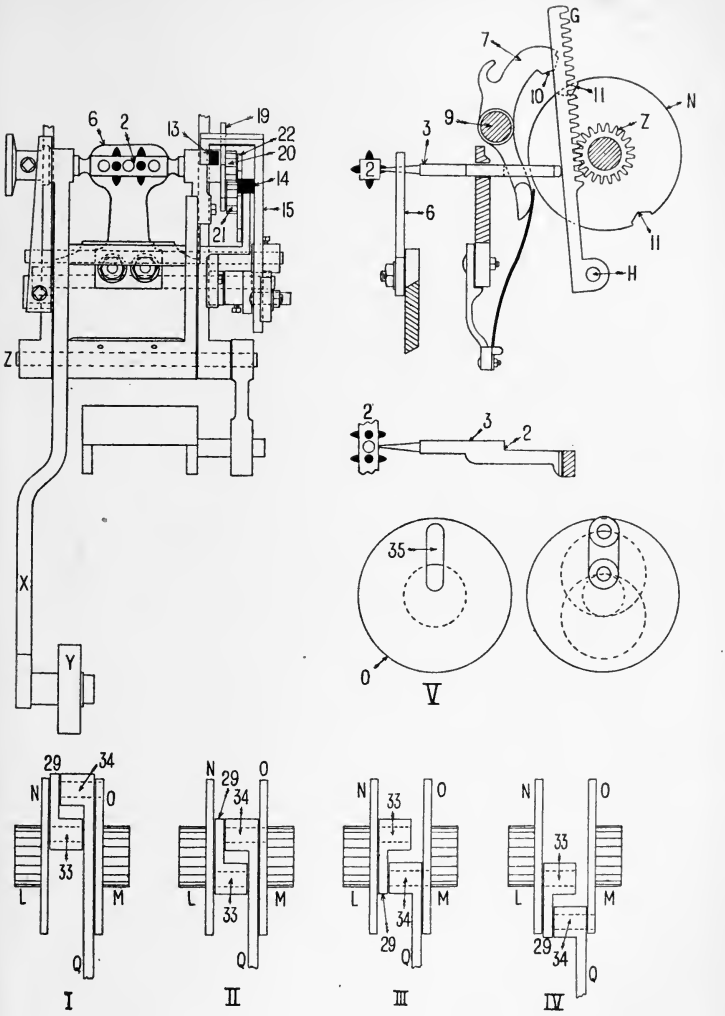
6
2
13
19
22
20
14
15
21
Z
X
Y
7
G
10
11
N
9
3
Z
2
6
11
H
2
3
2
35
0
V
29
34
N
O
33
L
M
Q
I
N
29
34
O
33
L
M
Q
II
N
33
O
L
M
34
29
Q
III
N
O
33
L
M
29
34
Q
IV

FIG. 244.

The long stud 29 rests by gravitation on the lags, but, if a peg be immediately under the stud 29, the latter is raised as well as the L-shaped lever 30, see detached view in Fig. 243. This causes the lower arm of L-shaped lever 30 to move towards cylinder 27. A small pin near the lower end of this lever enters a slot in bracket 32, which is set-screwed to rod 16; rod 16 therefore moves towards balance wheel 36, and in doing so it carries pin 14 from contact with star wheel 22, and places pin 13 in contact with star wheel 19. The same detached view in Fig. 244 shows the connection between the middle needle 4 and the small rack 24.

The four detached figures at the bottom of Fig. 244 indicate the positions of the part Q and its companion part 29 when acted upon by discs N and O and wheels L and M through racks G and J. Fig. I. shows the parts Q and 29 in their highest positions, and therefore the top box level with the race. Half a revolution of wheel L and disc N will take pin 33 to the position shown in II.; but since Q and 29 are attached, it follows that when 29 is forced downwards part Q must accompany it, and a slot in disc O, shown at 35 in V., permits this. The change from II. to III. is obtained by rotating wheel L so that pin 33 moves to the top again, but wheel M is rotated, and this carries 34 to the bottom. As the disc O rotates, part 34 rotates part 29 since pin 34 passes through both 29 and Q. A lift of two boxes is thus obtained. When both N and O are moved through half a revolution, the two pins 33 and 34 are in the lower position, and the 4th box is lifted.

The advantages of such motions as those described are, we think, at once self-evident. In addition to the special advantage, in one case of simplicity in building and reading the pattern chain, these motions have the general

advantage pertaining to mechanisms in which eccentrics are the means of converting a circular motion into a rectilinear one. This is, briefly, that the body moved—in this case the boxes—begins its movement slowly, increases its speed towards the middle of its stroke, and then gradually comes to rest. With a motion of this type it is possible to obtain the highest speed practicable, as it will make any change or skip of the boxes with perfect steadiness and regularity of lift.

A drop-box motion of a semi-positive nature is illustrated in Fig. 245. This motion, which works in conjunction with the shedding and picking motions of the Hollingworth and Knowles' loom, see pages 187 to 197, and 348 to 352, receives its motion direct from the toothed driving cylinders or gears A and B which, although compounded and rotating with those for actuating the shedding levers, do not necessarily act at the same moment. As a matter of fact, the gears A and B, which impart motion to lever E for the boxes, and to the corresponding lever for the picking, are, as regards time and action, adjusted independently of the position of the similar gears which impart motion to the levers for shedding. The vibrator lever C, which supports vibrator gear wheel D in both top and bottom positions, receives its motion from the box and picking chain J. Each rod of this chain for a 4-box motion has provision for five bowls or bushes—four for the boxes (two for the boxes at one side and two for the boxes at the other side) and one for the picking. The connecter E couples the wheel D to the simple box lever F, while a similar, but longer connecter is used for operating the compound box lever G from another wheel D. The lever F is fulcrumed in the bracket K, and at a point L a chain M is attached; this chain is passed over a flanged pulley on the end of lever

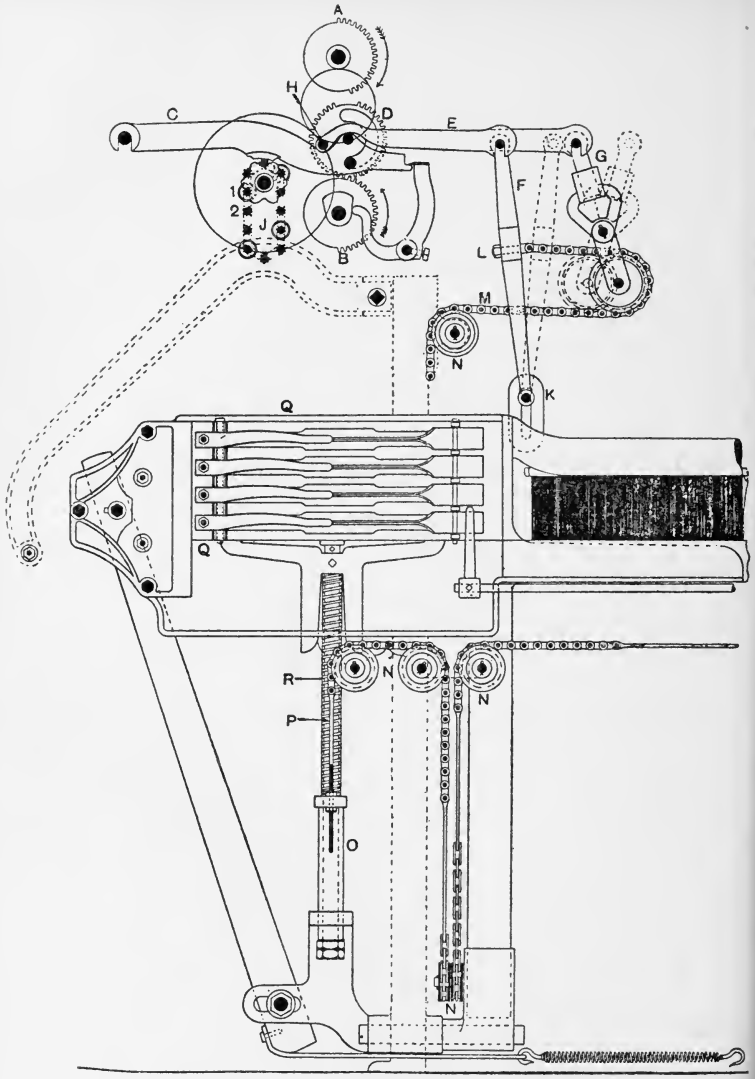

Fig. 245.

G, and is then taken over the guide pulleys N, and attached, by means of adjusting screws, as shown, to the projecting head of a long sleeve O which encircles the lower end of the box rod P.

As the driving gears A and B revolve in the direction shown by the arrows, the crankpin H in the gear wheel D will be rotated to the extreme left or to the extreme right, if the periphery of the wheel D presents that part with a missing tooth to the top or bottom cylinder respectively; but if the large gap in the teeth of D is close to the operating cylinder no change takes place; the movement is therefore identical with that in use for the shedding motion.

The position of the gear wheel D is determined by the pattern chain J, which is built of bowls 1 and bushes 2, and is carried round by the chain gearing. If a bush 2 be brought underneath the vibrator lever C, the latter will assume the position shown, the gear wheel D will be acted upon by the driving gear B, and the pin H will be rotated to the right. But if a bowl 1 be brought under the lever C, the gear wheel D will be raised into contact with the driving gear A, and the pin H will revolve to the left. By means of the connecters E, the movement of the crankpin H is conveyed to its corresponding lever F or G, and in turn to the box chain M. Any movement thus given to the sleeve O, through lever and chain and a strong helical spring R, is imparted to the shuttle boxes Q. The spring R has sufficient strength to support the boxes in their proper position under ordinary circumstances, but it yields to prevent breakage in the event of excessive obstruction—such as a trapped shuttle—being offered to the upward movement of the boxes. The latter fall in virtue of their own weight, and whilst in this sense the

motion might be termed negative, all vibration or tendency to rebound is effectually checked by the chain M, which controls the boxes when falling as well as when rising. It is worthy of note that as the chain M is actuated by a pin or pins H (which move in a semi-circle from one dead centre to the other), the motion imparted to it, and therefore to the boxes, will be slow at the beginning and at the end of the movement, with an increase of speed towards the middle.

When the boxes are at their lowest point, the levers F and G assume the positions indicated by the dotted lines in Fig. 245, but, by moving the lever F into the position shown by the solid lines, a lift of one box is obtained—in other words, the travel of the lever F at the point L is equal to the lift of one box. If the lever F be retained in the dotted position and the lever G be taken to the solid position, a lift of two boxes is obtained. While the travel of the pulley carried by the lever G is equal to the lift of only one box, it is evident that in moving the lever both the upper and the lower reaches of the chain M will have increased in length by the lift of one box, giving a total lift of two boxes. It is now obvious that a lift of three boxes will be got by moving both levers F and G from the dotted positions to the solid positions, as shown in Fig. 245.

In Fig. 246 a diagrammatic representation is given of the boxes, levers, and connecters in all four positions. In the first position, both the crankpins H and H^1 are at the extreme left with box No. 4 in position on the race line X Y. In the second position, the crankpin of the lever F has moved to the right, allowing box No. 3 to fall into place on the line. In the third position, the crankpin of the lever F has returned to the left, whilst that of lever G has rotated to the right, allowing a further fall to box No. 2.

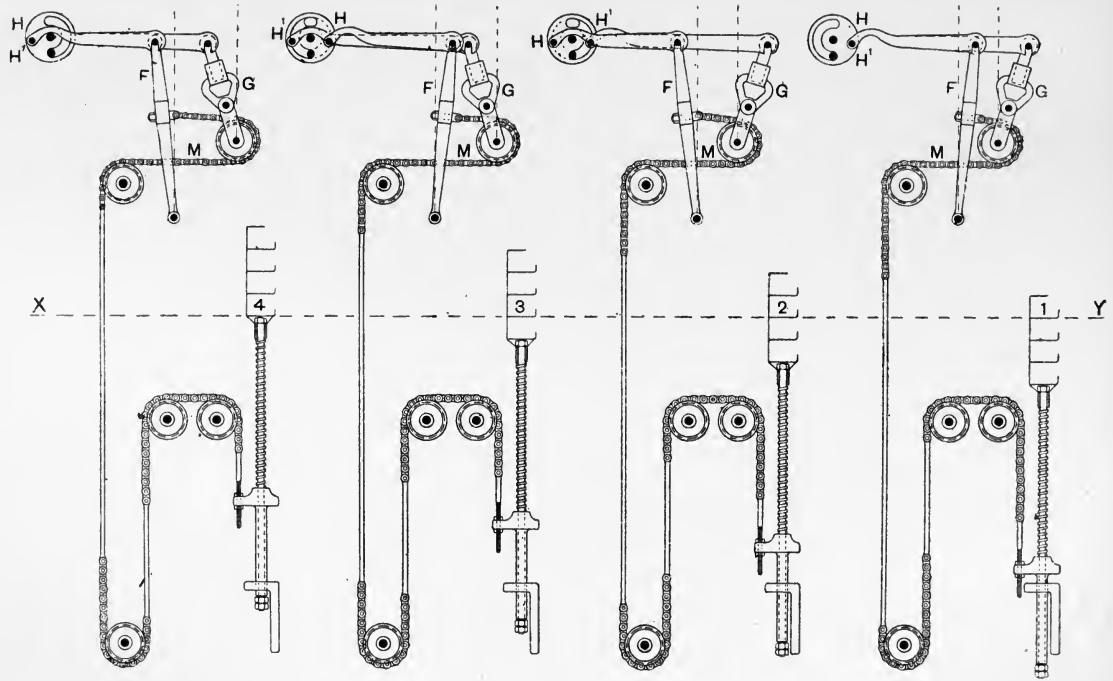

FIG. 246.

In the fourth position, both crankpins have moved to the right, allowing box No. 1 to reach the race line. Equivalent movements of levers from right to left result in corresponding lifts to the boxes.

A slight addition to the above motion has converted it into a perfectly positive motion; this will be seen by reference to Fig. 247. The chain M, which originally started at point L and moved as shown in Fig. 245, is now

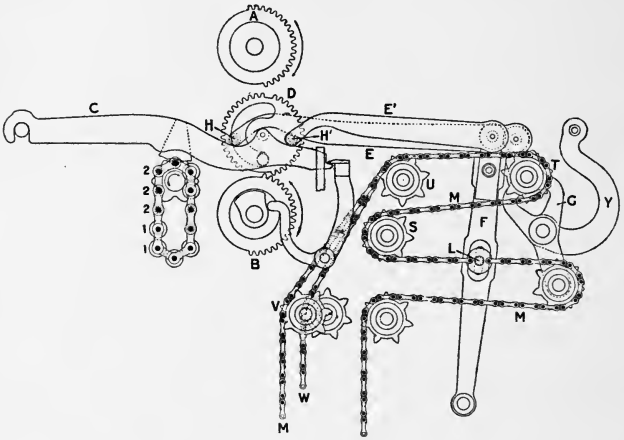

FIG. 247.

continued to the left, passed over sprocket wheels S, T, U, V, and similar wheels near the floor, so that it may be attached to the lower end of rod P, Fig. 245. It is obvious that the two chains attached at L will always move in unison, but since one chain is attached to the upper part of rod P, and the other chain to the lower part of P, it is possible to move the box positively either up or down by these chains. When either chain is moving the box, the other chain gives off a sufficient length to allow of such movement. The

chain M operates the boxes at one end of the loom, while the chain W, which is naturally carried on separate sprocket wheels and attached to its own set of levers, controls the boxes at the other end of the loom. Otherwise the movements are identical with those explained in connection with Figs. 245 and 246. In Fig. 247 it will be seen that the large gap in the wheel D is opposite the bottom cylinder B, and that the lever C and wheel D are in their lowest

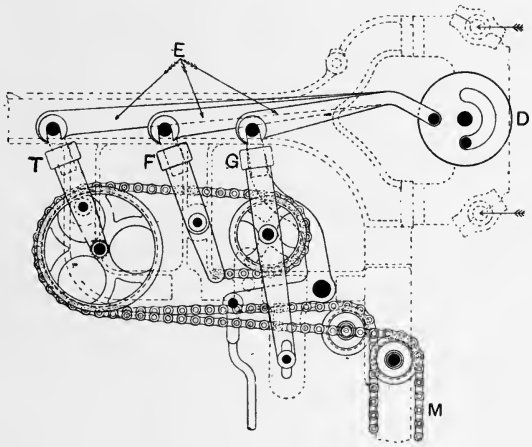

FIG. 248.

positions; but, since there are three more bushes (marked 2 on the chain) to appear in successive order under lever C, it follows that no movement will be given to wheel D, hence the box remains stationary for four picks. The lever Y is for the picking arrangement (see Fig. 186, and explanation on p. 351).

A similar principle arranged for six boxes is illustrated in Fig. 248. In this case three levers F, G, and T are necessary, each actuated as already described. The lever

F, although of a different kind from that shown in Figs. 245 and 246, again has a lift of one box, while the levers G and T have each a lift of two boxes, the three levers together, therefore, having a lift of five boxes. With the levers in their present positions, No. 1 (or the top box) is level with the race. To lift box No. 2 the lever F only is actuated. To lift box No. 3, the lever F is returned to its present position, and either the lever G or the lever T—say, G—is moved. To lift box No. 4—which, it must be remembered, is a lift of only three boxes,—the lever G would be retained in its new position, and the lever F would be pulled over in addition. To lift box No. 5, the lever F would be returned to its original position, lever G would be retained in the new position, and in addition the lever T would be actuated; whilst, to lift box No. 6, all the three levers require to be moved from the positions shown in the diagram.

Revolving Boxes.—These are so termed from the fact that the shuttles, usually six or seven, are arranged parallel to each other in separate compartments or boxes built in a circular framework, which is caused to revolve in either direction in order to bring the required colour or shuttle in line with the picker. The mechanism is generally arranged to rotate the boxes through the distance of only one at a time, although some motions are capable of rotating them through two or three compartments if desired. In Figs. 249 and 250, end and front elevations are given of the ordinary arrangement of Messrs. Hattersley and Sons Limited for six boxes, moving one at a time. The inner end of the circular framework A is conveniently supported by an iron band, and the outer end by a central spindle B. The latter is carried in a lengthened bearing C, which is fixed to the end of the lay, stiffened and supported by the

bracket D, and bolted to the lay swords E. Set-screwed on the outer end of the spindle B are two discs F, which support between them six horizontal pins G, arranged, as

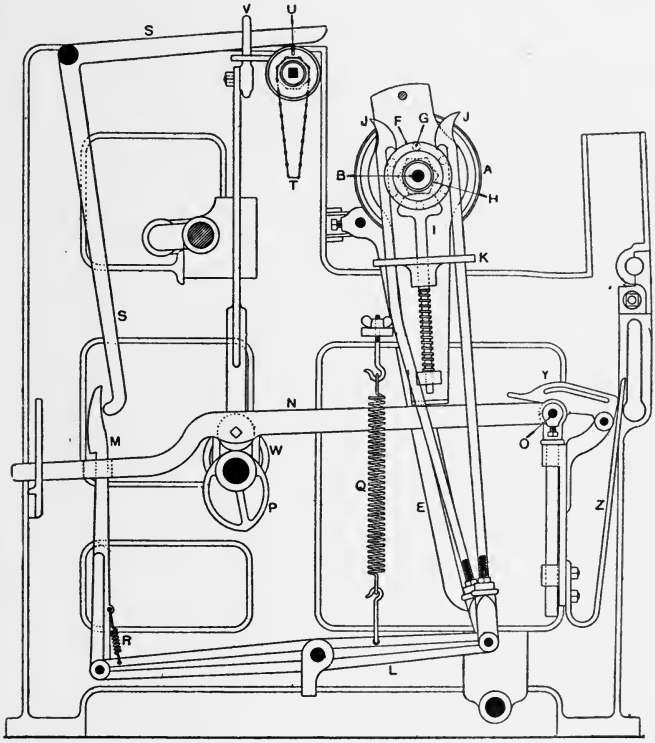

FIG. 249.

will be seen in Fig. 249, to divide the circle into six equal spaces. The nave of the inner disc is continued inwards to form a star wheel H, which is acted upon by a corresponding spring hammer I to bring the boxes level after

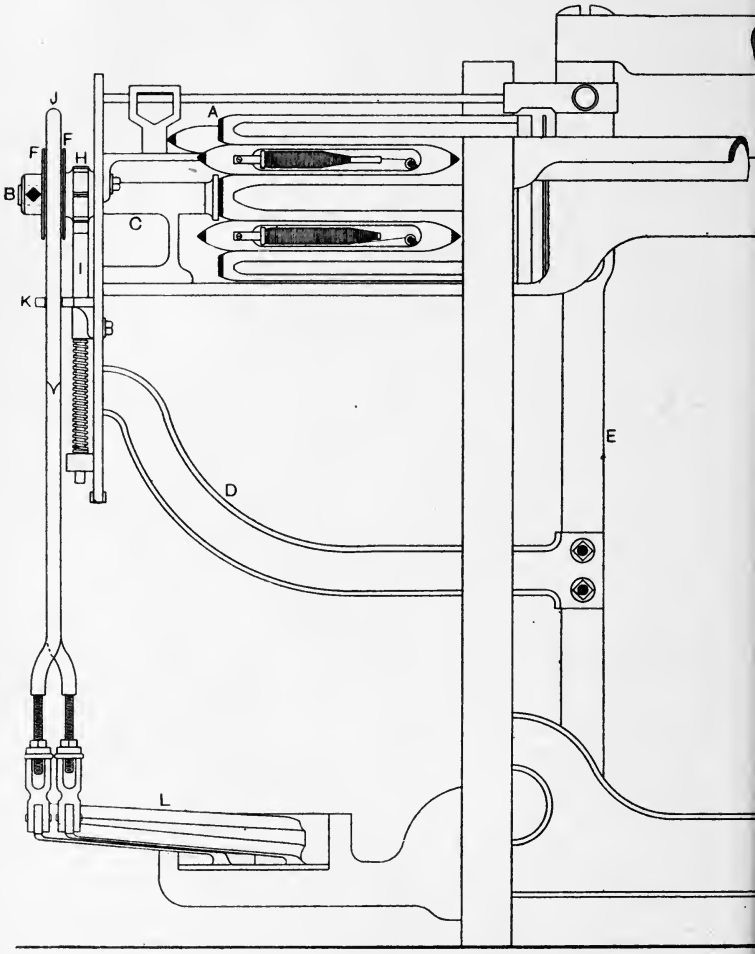

FIG. 250.

moving, and to prevent vibration when working. Situated

on each side of the spindle B, and in line with the pins G, is a long hook J, which is held upright by slots in the bracket K, and kept in touch with the pins G by the pressure of a flat spring, not shown.

It is obvious that the shuttle-boxes may be rotated to the right or to the left, as desired, by pulling down either the right or the left hook J. This is accomplished as follows :—Each hook J is attached at the foot to one end of a peculiarly bent lever L, which is fulcrumed near its middle point, and carries at its opposite extremity a vertical catch M. The upper end of this catch passes through a slot near the end of the horizontal lever N, which is fulcrumed at O, and has an alternate rising and falling movement imparted to it by the rotary action of the cam P fixed to the wyper shaft. Should the head of a catch M be pressed forward over the solid part of the lever N, the latter will in rising take M with it. Thus the corresponding end of the lever L is raised, the further end depressed, and the connected hook J pulls down and rotates the boxes in the desired direction. Each hook J is returned to its original position by a spiral spring Q, which is fixed at the top to a suitable bracket, and connected at the bottom to the corresponding lever L.

The catches M are retained in the position of inaction, or clear of the solid part of the lever N, by a short helical spring R, but are pushed forward as occasion requires by the pendant arm of the bell-crank levers S, the curved ends of which abut against the head of the catches M. This, however, takes place only when a hole in the card of the pattern chain T is presented to the peg U, which projects from the underside of the horizontal arm of the levers S. Under these conditions the peg U enters the card cylinder X, the horizontal arm of S falls, its pendant arm moves

outwards and forces the head of the catch M over the solid part of the lever N, and as the latter rises the boxes are rotated. The horizontal arm of each lever S rests in the fork of a vertical piece V, which has a rising and falling movement imparted to it from an eccentric W on the wyper shaft—the upward movement to raise the pegs U clear of the card cylinder X when the latter is turning, and the downward movement to allow them to fall in order to actuate the shuttle-box should the card be so cut. The card cylinder X is rotated by means of a catch attached to and moving with V. This catch acts upon a ratchet wheel of 8 teeth on the inner end of the card cylinder, and moves the latter one-eighth of a revolution as V rises—that is, every second pick. In order to prevent the shuttle boxes from turning too far when changing from one box to another, a stud is inserted in each lever L near its point of connection with its corresponding hook J. Each stud projects either across or beneath the other lever L, and both are so placed that when one lever is depressed, it, or its stud, comes into contact with the stud of the other lever, or with the lever itself, and carries the latter down at the finish of its movement. The distance through which the second or inoperative hook is pulled down is just sufficient to cause it to prevent the shuttle boxes turning too far, since the hook comes into contact with one of the rising pins.

It must, of course, be understood that the levers L and S, and the catches M, are in duplicate—one for each long hook J. Under ordinary circumstances the fulcrum end of the lever N is fixed in the position shown by a retaining catch Y and the flat spring Z, but in the case of excessive obstruction being offered to the turning of the boxes, the spring Z yields, and the lever Y is thrown upwards, thus

allowing the lever N to rise at that end in order to prevent breakage. Rollers are provided which push the shuttle last in use into its proper position as the boxes revolve, and plates fixed at the box ends prevent the shuttle not in action from end-long movement.

One of the chief defects of the ordinary revolving box motion is its inability to bring any desired shuttle in the six or more chambers instantaneously into line with the shuttle race. Because of this fact, and of the character of many three-colour patterns, it is often necessary to duplicate the shuttles of one or two of the colours in the boxes, in order that the pattern may be correctly developed by a step-by-step movement of the boxes. For the same reason it is impossible to produce many patterns of the tartan variety composed of five or even four colours with a 6-box revolving motion of the ordinary type. When the checks are composed of narrow bands it is often an advantage to use two shuttles containing the same colour in order to obtain uniformity, but, in general, it is not desirable to increase the number of shuttles beyond that representing the different colours in the fabric. To overcome the necessity of duplicating the shuttles except for the above object Messrs. George Hattersley and Sons Ltd., of Keighley, early introduced a skip-box motion by means of which any one of the six chambers may be brought at will into line with the level of the race.

In many respects a 6-chamber skip-box motion as illustrated in Fig. 251 is similar to a revolving motion of the ordinary type. The revolver spindle A, however, is provided with a toothed pinion of 12 teeth so that it may engage with, and be rotated in either direction by, the double toothed rack C. This rack is shown in its position of inaction, and is retained there, when not required to

move, by means of a spring D acting on and raising lever F and rod E. In this position the rear end of lever F rests upon adjustable bracket G bolted to the framework of the

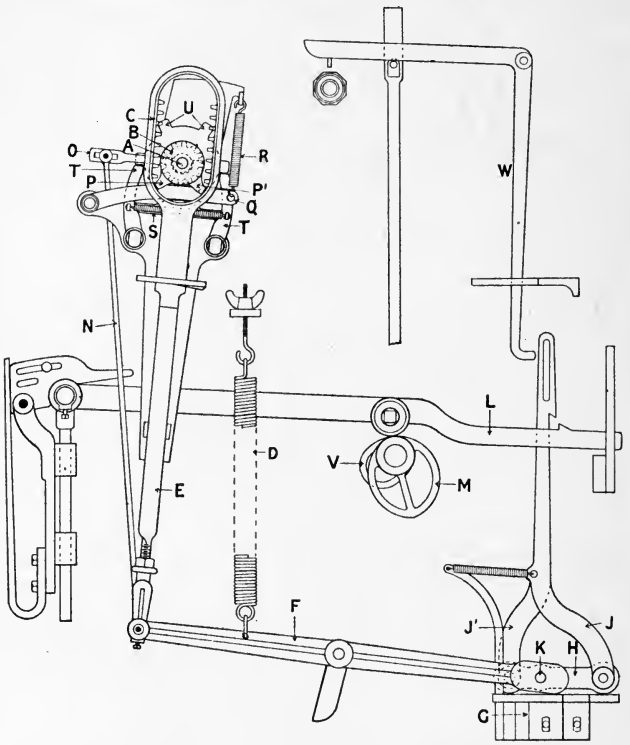

FIG. 251.

loom. Opposite ends of bracket G also serve as supports and fulcra for the ends of the short lever H which couples the lower ends of the vertical draw hooks J J^1, and also compounds the latter with lever F by means of pin or stud K.

Difference in the extent of the movement imparted to rack C, and therefore to the revolving chambers, is obtained by raising either hook J or J^1, or by raising both together. It will be observed that stud K is not situated midway between the points of connection of J and J^1 with lever H, but is nearer J^1 than J, the ratio of the distances being 1 to 2. It therefore follows that if hook J be raised by the action of the griffe lever L and the cam M, stud K will be raised only one-third of that distance, which is sufficient to move the revolving chambers the distance of one box. If hook J^1 be raised, stud K will rise two-thirds of the lift and the rack C will move the revolver two boxes, *i.e.* it will skip one box; while if both hooks J and J^1 be raised together, the stud K will rise through the same distance, and the revolver will be moved three boxes, *i.e.* it will skip two boxes.

Other two hooks similar to J are connected with a second lever F; rod N is attached to the end of this lever, as well as to lever O centred loosely on the nave of pinion B. These parts are provided to place either side of rack C in gear with pinion B and so determine the direction in which the boxes shall revolve. One of the hooks raises rod N, and the other hook lowers it, and a corresponding movement is thus imparted to the end of lever O. The opposite end of lever O is provided with two projections P P^1 which oscillate with the lever and act upon the inside of the rack C. When lever O is raised, projection P presses the rack to the left and causes the teeth on the right to engage with pinion B; the downward movement of the rack will thus rotate the boxes clockwise or "backwards." If, on the other hand, rod N be lowered, P^1 will force the rack to the right and the teeth on the left will engage with pinion B, and the boxes will be rotated counter-clockwise

or "forwards" when the rack is depressed. Lever Q and spring R support the lever O in position, but yield when movement in the latter is necessary. A spring hammer S prevents rocking of the boxes, but further stops are provided by the two detents T which engage with two of the six projections U on the revolver head. Detents T effectually prevent rotation until a change is required, when they are pressed apart by the hammer head S as the latter is forced downwards through the action of the third lever F. All three levers F are accommodated on the same fulcrum; the first lever F, that shown in the illustration, rotates the boxes as described; the second lever raises or lowers rod N and determines the direction in which the boxes shall turn; while the third lever pulls down the hammer S, opens the detents T, and permits the revolver to move in the desired direction.

The griffe lever L is for the movement of the boxes, but a second griffe lever is provided for placing rack C in position and opening the detents T, and this lever is operated by cam V a little in advance of the griffe lever shown. Four bell-crank levers W are necessary and all are raised and lowered as in the simple motion by means of an eccentric on the wyper shaft. One of these levers determines the forward direction, the second is for the backward direction, the third is for one-box movement, the fourth for a two-box movement, while the joint action of the third and fourth is for a three-box movement. The cards for this motion have therefore sufficient space for four holes. Each bell-crank lever W or indicator lever acts upon its corresponding hook J, but a fifth hook J is provided for the opening of the detents T, and this hook is put in action always by either the forward or backward direction hook when a movement is to take place. Two hooks J thus act

on one lever F for turning the boxes; other two hooks on a second lever for determining the direction, and the fifth hook on the third lever for opening the detents.

Revolving boxes compare favourably with drop-boxes when goods of only medium weight are required; but as an ordinary warp protector or stop-rod cannot conveniently be actuated by them, they are invariably accompanied by a loose reed, and on this account are unsuitable for cloths of heavy weight. In general, looms fitted with revolving boxes can be driven at a higher speed than those fitted with drop-boxes, and as the movement is circular and the boxes are balanced, less power is required for changing. It is true that with a motion that can move only one box at a time equal facilities for changes of colour are not offered as with some positive boxes, but this is in great measure compensated for by the fact that a greater number of colours can be used without any material reduction of the speed being necessary. The reading and cutting of the pattern chain T, Fig. 249, as well as that for the skip-box motion illustrated in Fig. 251, is a simple matter when the position of the various colours in the shuttle-box is taken into consideration. The above motions have boxes at one end only, consequently single picks of any colour cannot be inserted; if, however, the loom has boxes at both ends, and a pick-at-will motion, almost any arrangement of shotting is possible. In the ordinary motions one card serves for only two picks in succession, the result being a lengthy chain when the pattern repeats on a large number of picks. In order to reduce the number of cards for such patterns, special motions of various kinds are added to the different types of circular-box looms.

CHAPTER XVIII

AUXILIARY MOTIONS: WARP PROTECTORS, WEFT FORKS, CHECK STRAPS, TEMPLES, ETC.

WARP protectors are motions introduced to stop the loom automatically should the shuttle through any cause fail to reach the shuttle-box in due time.

In all looms for jute weaving, and in the greater majority of those employed in linen weaving, the reed, when in position, is a fixture between the lay and the top shell or cap. If the shuttle fail to clear the shed at the proper time—a not uncommon event—it would, in virtue of the forward motion of the reed, be forced through the warp, unless means were provided for bringing the loom to a sudden and almost instantaneous stop. In some looms for light or medium fabrics, however, it is not unusual to find the reed so arranged that its lower rib yields and swings backwards to prevent breakages if at any time its forward movement is obstructed by the shuttle. Such an arrangement receives the name of the loose or fly reed (in contradistinction to the fast reed motions), and is, as already indicated, the almost invariable accompaniment of a revolving shuttle-box motion, although found in many cases where a single shuttle is used.

In common with all looms where a negative picking motion is employed, the shuttle-box of a fast reed loom is fitted with a tapered wooden or metal lever or swell A (Figs. 252 and 253—shown detached in the latter figure). This swell is fulcrumed in this case in a corresponding

horizontal slot in the back of the shuttle-box by means of a pin B. In some drop-box looms the swells occupy

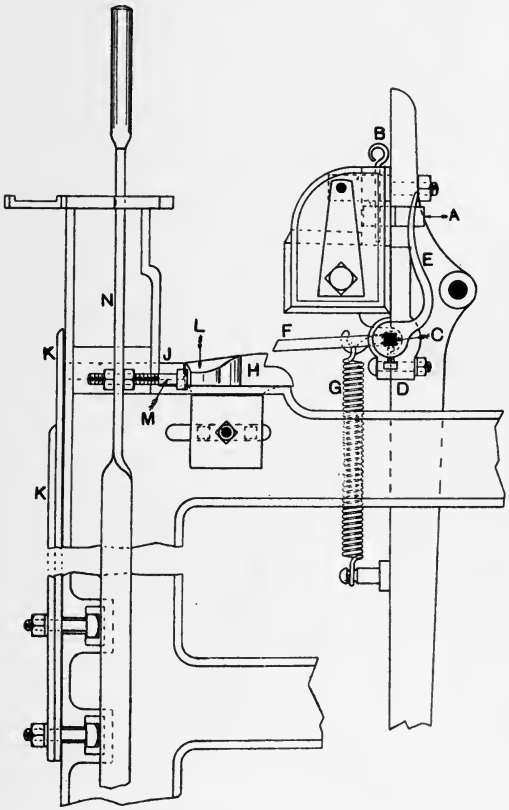

FIG. 252.

a position in front of the shuttle-box. Swells vary in thickness from $\frac{3}{4}$ in. to 1 in. according to the depth of the shuttle, and are arranged to act about midway between the top and bottom of the shuttle-back. Previous to the

entrance of the shuttle, the bulge or wide portion of the swell projects into the shuttle-box, and the shuttle, in order to gain proper entrance to the box, is compelled to force back the swell. This swell, or bulge, should be so tapered that the shuttle may be well in the box before the back part of the swell is flush with the back of the box, otherwise the tongue F may be lifted before the shuttle leaves the warp, when the warp threads occupy practically the full width of the reed space. Inasmuch as swells must fit freely in the slots provided, the backward movement of the swell would be a simple thing to do if no further resistance than that of the weight of the swell were offered; but in fast reed looms this swell fulfils the double function of assisting in bringing the shuttle to a stop and of actuating the further portions of the protector motion.

Set-screwed on the square end of the stop-rod C—which extends along the under side of the lay, and is supported at each end in brackets D projecting from the lay swords —is a curved finger E, the top of which is situated immediately behind a portion of the back of the swell A. Welded near each end of the stop-rod is a projecting piece or tongue F, arranged in line with the end framing or gable of the loom. The spiral spring G fixed at the lower end to an adjustable stud in the lay swords, and attached at the top to a hook on the stop-rod, exerts through the rod C and finger E a certain pressure on the swell A, and at the same time tends to keep the tip of the tongue F in the lowest position. Supported on the framework of the loom is a sliding frog or knee H, one end of which is in constant touch with a wrought-iron pin J; this pin passes through the framework and abuts against the upper end of the heavy flat springs K. In some motions the pin J is a continuation of the frog H. From Fig. 253 it will be

observed that the frog H is extended sideways by a tapered piece L, which, when the loom is running, almost touches the head of an adjustable bolt M in the set-on handle N. In the position shown in the figures it is assumed that the

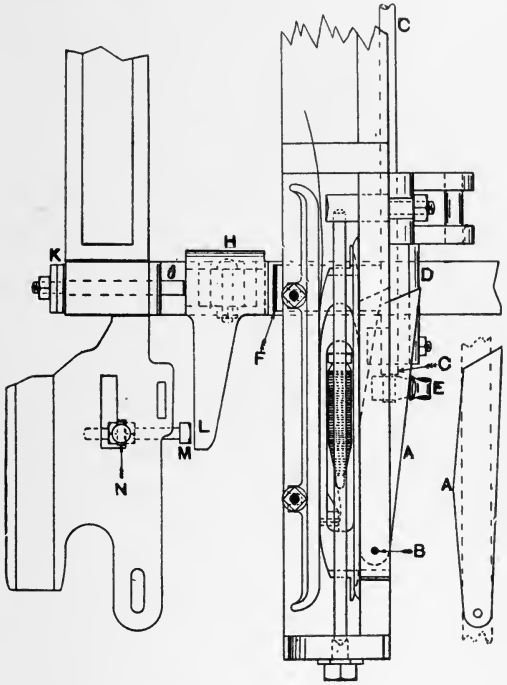

FIG. 253.

shuttle has entered the shuttle-box, has forced back the swell A and the finger E, and has therefore rotated the stop-rod C sufficiently to elevate the tongue F above the knock-off frog H. Under these conditions the loom continues to run; but should the shuttle fail to enter the box

properly before the tongue F reaches the frog H (see Fig. 252), these two latter come into contact, the forward movement of the lay is imparted to H, the projecting piece L strikes the bolt M in the set-on handle N, and the latter is knocked out of its retaining notch, springs sideways of its own accord, and causes the belt fork to move the belt on to the loose pulley.

The force of the impact between F and H is almost completely taken up by the heavy flat springs K, which are bolted to the frame of the loom, as shown. In order to prevent twisting of the lay, tongues F and frogs H are provided at each end of the stop-rod C, and care should be taken in fitting these to see that both tongues are of equal length, and that they come in touch with their respective frogs at exactly the same time. The tongues F must be of sufficient length to prevent breakage of the warp threads should the loom knock off with the shuttle in the shed. Mechanics and tenters often determine this in practice by making the distance from the reed to the fell of the cloth, when the tongues F and the frogs H are in contact, a little less than the breadth, plus the depth of the shuttle. A more correct and general method can, however, be deduced from the fact that no tappet loom, much less a harness or dobby loom, should take more than half a revolution of the crankshaft in the passage of the shuttle from start to stop. In the case, therefore, of looms which pick about the bottom centre of the crankshaft, the shuttle should be home before the top centre is reached, and the tongue F should be of sufficient length to be in contact with the frog H just before the crank reaches this point. Where the loom picks on or about the top centre the reverse is, of course, the case, and tongues and frogs can be in contact here a little after the bottom centre is

reached. It will be seen that in the case of drop-box looms this time of contact between F and H determines, in a way, the time for changing the boxes, for however early the shuttle may be timed to reach the box, it is clear that F must have cleared H before or very soon after the boxes begin to change, otherwise the tongue F might be lifted clear of frog H by one shuttle, while at the same time another shuttle might be caught in the shed. Or, otherwise, it is obvious that should the boxes begin to move before F clears H, although the shuttle were home, the movement of the boxes might take away the support of the swell A from the lever E and allow the tongue F to fall into contact with the frog H, thus bringing the loom to a stop when it should continue to run. The tongues F should not clear the frogs H if the shuttle tip projects in the slightest degree across the reed or the weft fork grate, where looms are provided with such; they should, however, clear the frogs by $\frac{1}{8}$ in. to $\frac{1}{4}$ in. when the shuttle is properly home. The lift of the tongue F is regulated entirely by the extent to which the swell A projects into the shuttle-box, while its position can be modified by increasing or decreasing the bend of the wrought-iron finger E. The best position possible for the tongue when knocking off is one in the line of action of the stop-rod C, or, in other words, at right angles to an imaginary line joining the centre of the rocking-shaft with the centre of the stop-rod. This, however, is seldom attained in actual practice, but any variation above or below this line constitutes a leverage tending to turn the stop-rod when the loom knocks off. The springs G should be as easy as possible consistent with firmness and certainty of action. It is also important to see that the tongues are clearing the frogs properly when the loom is running, as inattention to this point results in

worn frogs and blunt tongues, with the inevitable slipping over and a smash at some time instead of the proper protection.

Another type of knock-off motion is illustrated in Figs. 254 and 255. The stop-rod C carries, as usual, two

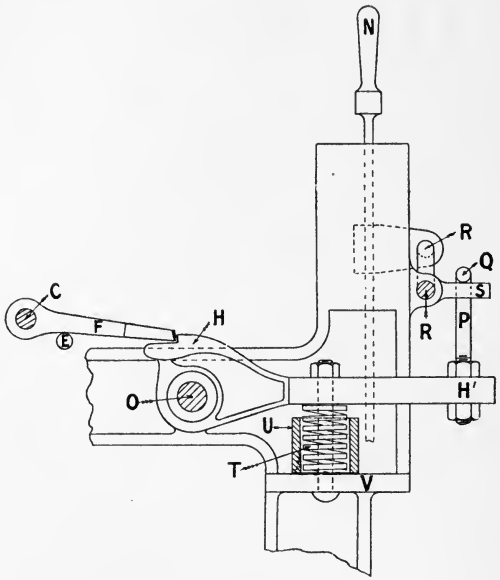

FIG. 254.

tongues F which are lifted when the shuttle is in the box by rod E which forms the lower cranked part of the finger. The action is almost identical with that explained in connection with Figs. 252 and 253 when the loom is running, *i.e.* the tongues F clear the knees or frogs H. In Figs. 254 and 255, however, the frog does not slide, but is capable of being slightly rotated upon the rod O. The

frog extends to the front of the loom, and the end H^1 carries a short upright rod P with a bent end Q at the top. When the set-on handle N is pushed into the "on" position, *i.e.* moved to the right in Fig. 254, it draws forward the rod R upon which is fixed the short arm S. This movement

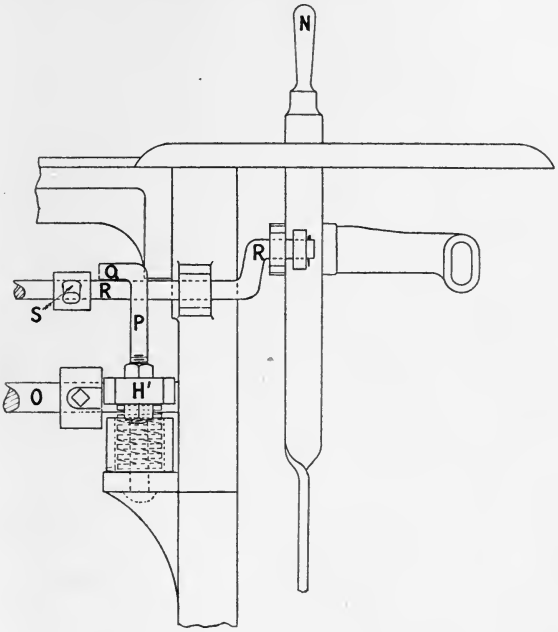

FIG. 255.

will clearly place the short arm S under the bent portion Q of the rod P. If the shuttle does not reach the box, the tongue F will come into contact with the front of the frog H, and the latter will, in moving slightly round O, cause the end H^1 to pull down rod P, and so cause the cranked end of rod R, Fig. 255, to pull the handle N out of its

notch, and thus stop the loom. The heavy spiral spring T, in short tube U, returns the frog to its normal position, and keeps it there when the loom is running correctly. The height of the tube should be such that the arm of the frog will not touch it when the latter is in the lowest position, otherwise the bracket V, which projects from the loom side, and supports tube and spring, may be broken.

A swell of an improved type specially adapted for drop-box looms, although quite suitable for single shuttle-boxes, is illustrated at A, Fig. 256, in its position in the box. It

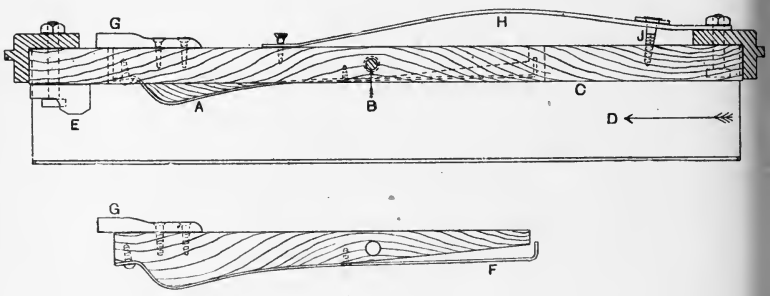

FIG. 256.

is also shown detached in the same figure. In general the fulcrum of a swell is placed near the inner end of the shuttle-box, and at one end of the swell, whilst the bulge of the latter projects into the box about half way from each end. The taper of the swell is also such that it begins to check the shuttle whilst a considerable portion of the latter has yet to enter the box proper, and is projecting along the lay. If such conditions obtain in a box loom, it is conceivable that with an ordinary swell the shuttle might be so checked that it would fail to enter the box properly before the latter had begun to change. A trap would thus be caused and the boxes thrown out of gear. The main

object of this improved swell is to prevent such a result. It is apparent from the figure that the fulcrum pin B is situated about midway in the length of the swell A, and that the bulged portion of the latter is now placed near one end, thus acting near the inner end of the shuttle-box. The swell is so tapered that its narrow end is entirely within the slot in the box back C when the box is empty, thus permitting the shuttle, when entering in the direction D, to be entirely within the box before it is checked in the slightest by the action of the swell. The shuttle is further checked at the inner end of the box by a raw-hide buffer E. While the broad end of the swell A is pressed outwards by the shuttle, the narrow end enters the box slightly, and grips the shuttle by means of a flat spring F, screwed to the face of the swell. This effectually prevents the shuttles moving about in the boxes while the latter are changing. A further point which is considered by many, but perhaps erroneously, to be an advantage is that in picking the shuttle is relieved from all pressure of the swell immediately after it begins to move.

A cast-iron stop G, screwed to the back of the swell, limits the latter's entrance into the box, and also actuates the usual stop-rod lever. When the boxes are not in line with the race of the lay, pressure upon the back of the swell is obtained by means of a flat spring H and adjusting screw J.

In looms fitted with a loose reed motion there is no necessity for a proper swell, but something is required which will aid in bringing the shuttle to a stop and in preventing its tendency to rebound. Pressure in this instance is generally obtained by means of an internal flat spring which acts against the back of the shuttle. The further parts of a loose reed motion, as obtaining in some looms, are as indicated in Fig. 257.

Situated beneath the lay in a position similar to and

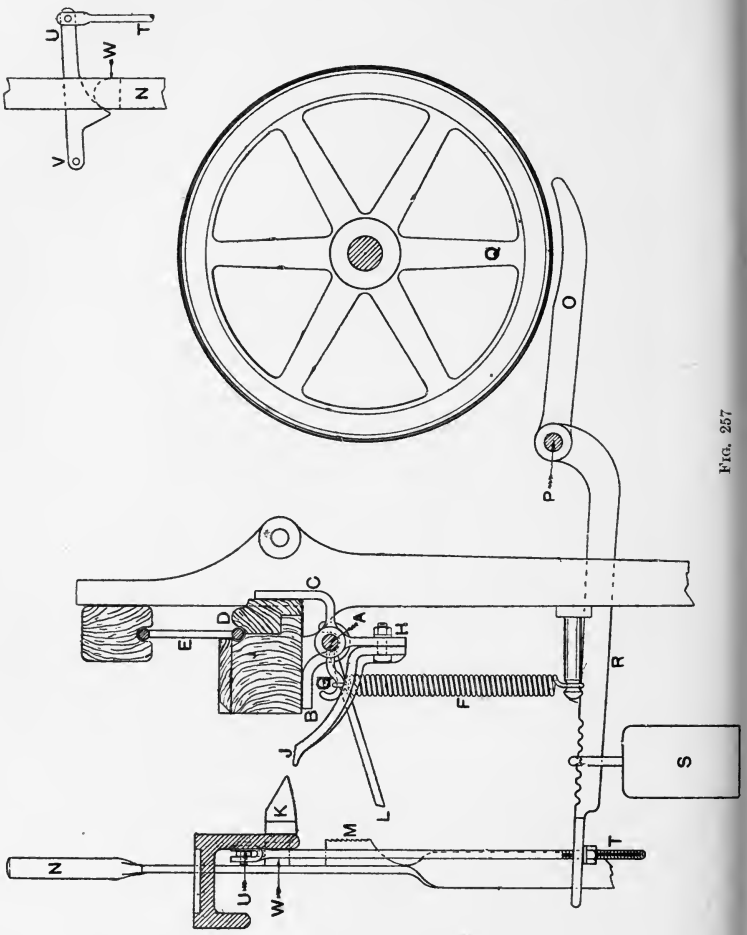

FIG. 257

fulfilling somewhat similar functions as the stop-rod in a fast reed loom, is a rod A supported near each end by

brackets from the lay swords, and also at intervals along its length by brackets B fixed to the under side of the lay. Fixed to rod A at various points are several ⌊-shaped brackets C which carry a wooden clamp or bar D, the latter being caused to press upon the lower rib of the reed E by the action of the spiral spring F acting through the hook G on the rod A. Fixed also on rod A, and at intervals of about 25 to 30 ins., are several levers H, which carry further curved levers or fingers J. As the lay moves forward under ordinary circumstances, each finger J is carried underneath its corresponding tapered frog K, which is bolted in this case to the face of the breast beam. The parts are so adjusted that the upper faces of the fingers J press against the underside of the frogs K in order to ensure the reed being held firmly in position at the time of beating-up. Should the shuttle, however, remain in the shed, then immediately the pressure between the shuttle and the reed exceeds the tension of the spring F, the lower rib of the reed E is forced backwards—the upper rib in the groove of the top shell acting for the time being as a pivot on which it turns—and the bar D is forced outwards, rotating the rod A sufficiently to raise the extremity of the fingers J above the points of the frogs or heaters K. Further movement of the lay forces J farther up the inclined part of K, and the bar D is thus made to give greater freedom to the backward motion of the reed. At the same time the tongue L, set-screwed to the rod A, is elevated in line with the roughened face of the piece M fixed on the front of the set-on handle N, contact ensues, and the set-on handle is knocked out of its retaining notch, with the result that the belt is moved on to the loose pulley. In ordinary circumstances the tongue L moves underneath the piece M.

It will be seen that while the tongues J and the frogs K are apart, the reed is held steady in its position by the action of the spiral spring F alone, and this, taken together with the fact that rigidity in the reed for beating-up purposes depends entirely upon the stiffness of the fingers J, levers H and C and the rod A, make the motion unsuitable for use with large heavy shuttles or for the production of heavy fabrics.

In conjunction with the loose reed motion shown in this figure, although not necessarily an accompaniment of it, is indicated one of the different methods of applying a brake to a power loom. The brake itself consists of the short arm or paw O of the lever fulcrumed upon the projecting stud P. This arm is curved to fit and act upon the rim of a fly-wheel Q which is keyed upon the crankshaft between the driving pulley and the usual spur pinion, while the other arm R extends to the front of the loom, is notched to receive a drag weight S, and is then flattened and drilled to receive the lower end of a rod T. An adjustable nut on T supports R so that arm O is clear of the fly-wheel Q when the loom is running. The upper end of the rod T is attached to the extremity of a short curved lever U fulcrumed at V (see detailed view at right of figure), the under or curved side of which rests upon a projecting piece W on the face of the set-on handle N. In moving this handle into the "on" position the piece W acts upon the under side of the lever U, and through the rod T raises the arm R and relieves the fly-wheel Q from the arm O; but as the handle N springs back into the "off" position, the lever U falls and allows the weight S to act upon the arm R and bring the arm O into contact with the wheel Q.

Loose reeds and brakes form part of the usual furnish-

ings of light, high speed looms, but considering the number of looms that are in constant and satisfactory use in jute and linen weaving in which no brake whatever is applied, it appears open to question whether one is desirable in any case unless say for automatic looms. In the method under consideration one of the most obvious defects is that when the loom is "off" the brake is "on," offering resistance to the weaver in her efforts to turn the loom into any desired position; but in most cases, however, the connections to the brakes are so arranged as to enable the weaver to make the brakes inoperative should she desire to turn the loom by hand.

One of the most efficient loose reed motions is illustrated in front and sectional end elevations in Figs. 258 and 259. In this arrangement the lower rib of the reed A is supported as usual in an angle iron bar B carried by a series of arms C which are keyed on the stop-rod D. The upper rib of the reed is, as is also usual, held in position by the upper shell E, but in this case the front lower section of the upper shell is hinged to the main part at intervals along its length, and is kept firmly in its normal position by means of contained springs F.

Near the extremities of rod D tongues G are keyed, and these are locked in the position shown in Fig. 258, as the lay H approaches the full forward position, by the pull of the spiral spring J fixed on the lay front acting through rod K and levers L L′. If necessary in wide looms a third tongue G and locking lever L may be provided at an intermediate position. Levers L L′ are fulcrumed on brackets fixed to the lay, and lever L is provided with a third arm by which the tongues G, as well as the reed A, are set free as the lay recedes through the action of the double throw cam M adjustably fixed on the wyper shaft N, the lever O

fulcrumed on stud P, and the connecting rod Q. In the drawing, wyper shaft N, cam M and lever O have been turned through an angle of 90 degrees from their true

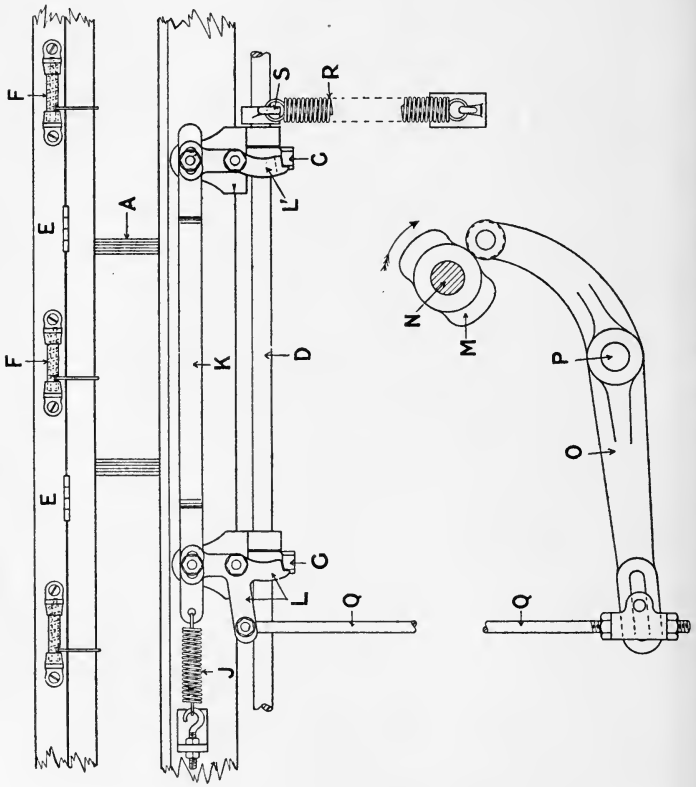

FIG. 253.

vertical plane, using rod Q as a centre. Should the shuttle fail to clear the shed in due time, pressure between the warp, shuttle and reed A causes the latter to swing back at the bottom and so tilt the extremities of the tongues G

that they cannot be locked when the cam M permits spring J to act. Spring R, hooked at the lower end to a convenient part of the lay sword and at the upper end to a short hooked lever S on the stop-rod D, ensures that the reed A, when back with the lay, will be sufficiently rigid to support the shuttle as the latter is crossing. The hinged part of the upper shell E, while holding the reed A sufficiently rigid for the ordinary purpose of beating-up, gives the reed greater freedom of movement should a shuttle remain in the shed; indeed, the reed may come out of the upper shell entirely, but this arrangement permits of its replacement without requiring to remove the upper shell and slip the reed into its groove endwise as is sometimes the case.

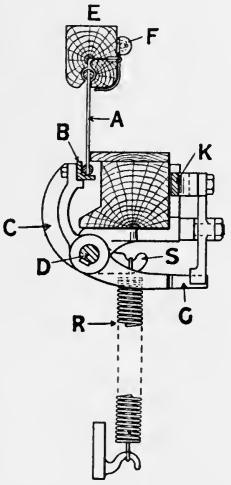

FIG. 259.

The Weft Fork.—Probably the most simple and yet most delicate piece of mechanism found in general application in practically all looms except those for jute weaving is that of the weft fork or motion to stop the loom if the weft be run out or broken. It is a simple and inexpensive motion, can be fitted to any existing loom, and when properly adjusted is certain in its action and gives little or no trouble to the weaver. It is in fast-running looms of the hessian type where its benefits are best appreciated, for in numerous cases it prevents the loss of time due to picking out, to turning back, and to taking up broken selvages. Where no weft fork is in use, it frequently happens that the weft breaks and catches on again without a stoppage

of the loom, and if in this interval the shuttle makes a few journeys without leaving any weft in the cloth, a broken pattern results. The loom may continue to run for some time before the fault is detected, and thus a considerable amount of weft may have to be picked out. In these cases there is also a certain amount of waste, and always a faulty place the entire width of the fabric.

Figs. 260 and 261 show in elevation and plan the side weft fork motion. The chief parts are the upright grate A (see also Fig. 265), the three-pronged fork or lever B fulcrumed on the pin C, the fork rod D set-screwed on the set-off lever E which is fulcrumed at F, the hammer G and the lever H compounded at J and both moving on the stud K, and the lifting cam L set-screwed on the wyper or second shaft M. The grate A has three openings, is about the height of the reed, and is situated slightly behind the face of the latter just at the entrance to the shuttle-box at the driving end of the loom. The lay is grooved across the race at that point about $\frac{3}{4}$ in. deep by $1\frac{1}{4}$ ins. broad to receive the grate and to permit of the passage of the prongs of the fork B as the lay moves backwards and forwards. These prongs—three in number, corresponding with the openings in the grate A—are bent downwards almost at right angles to the body of the fork, and dip to about $\frac{1}{4}$ in. from the bottom of the groove. The fork B is balanced on its fulcrum pin C so that the moment of force or tendency to turn is always in favour of the straight (or left) arm. Such being the case, if no obstruction be offered to the passage of the prongs through the grate A when the latter advances with the lay, the hook on the extremity of the straight arm of the fork will continue to rest in the position shown on the head of the hammer G. As the wyper shaft M revolves in the direction of the arrow, the

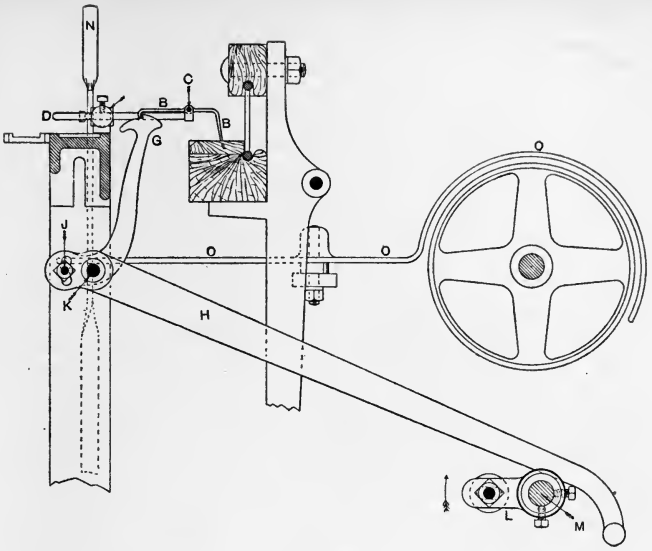

Fig. 260.

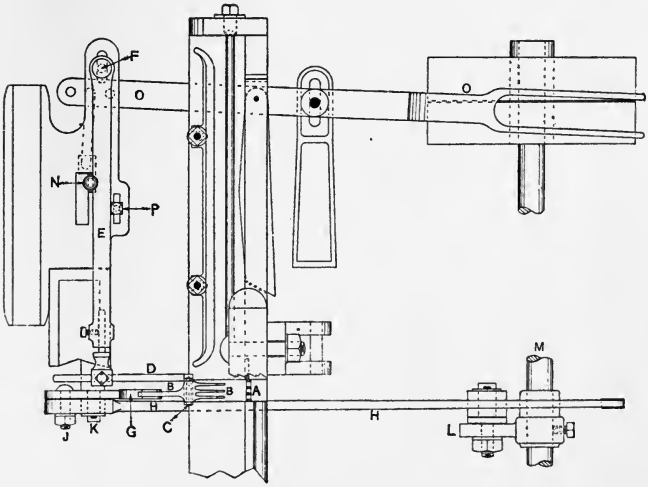

Fig. 261.

anti-friction roller of the cam L raises lever H and moves forward the head of the hammer G. The latter takes with it the fork B and its supporting rod D which is set-screwed in the end of the lever E. This lever is situated immediately behind the set-on handle N, and in moving forward with the weft fork forces the handle out of its retaining notch, allowing the latter to spring sideways and move the driving-belt on to the loose pulley by means of the belt fork O. If, however, the unbroken weft be present and crosses the path of the fork prongs, it obstructs their passage through the grate A, in consequence of which they are deflected by the further forward movement of the grate; the straight arm is raised clear of the head of the hammer G, and the latter moves forward without disturbing the position of the lever E, so that the loom continues to run.

The cam L has to be set so as to begin to move the hammer G forward just as the reed begins to travel backward. The fork B must be adjusted so that the prongs pass freely through the grate A if no weft be present, otherwise it may be damaged, besides allowing the loom to run instead of fulfilling its proper function. It must also be set so that the hook on the end of the straight arm clears the catch on the head of the hammer G by about $\frac{1}{8}$ in. when the latter is at its farthest back point with the set-on handle N in its "on" position. Sufficient opportunity is given for the adjustment of the fork in the lever E and rod D, and of the position of the hammer G by the concentric slot at J. The travel of G is modified by altering the position of the anti-friction roller and stud in the cam L, and the time of movement by the adjustment of the latter on the wyper shaft M. Sufficient travel to force the set-on handle N entirely out of its retaining catch is all that is required. The bolt head P acts as a stop to the backward

movement of the lever E when the handle N is "set on." The fork B should not tilt more than necessary to clear the head of the hammer G when weft is present.

From the position of the parts, and the fact that the hammer G is actuated from the second or wyper shaft, it is obvious that the motion will act only every second pick, and on this account three picks at most (two in general) may be missed before the loom is brought to a stop. To avoid forming a thin place in the cloth by the omission of these two or three picks, the retaining catch of the uptake motion is withdrawn from the wheel by means of a vertical lever fulcrumed near K and actuated by E. To prevent the fork from drawing the weft from the shuttle, and so possibly stopping the loom when weft is present, shuttles are sometimes made right- and left-handed—that is, for a left-hand loom similar to that illustrated the eye of the shuttle would be at the left-hand end, and for a right-hand loom the eye would be at the opposite end of the shuttle. This arrangement of the shuttle eyes also reduces the tendency of the weft to fly over the fork.

Centre Weft Fork.—A weft fork similar to that described above may be used in drop-box looms where the boxes are fitted at only one side; but in looms with boxes at both sides, and arranged to pick at will from either, such a weft fork is practically useless. It is obvious that if two or more shuttles were collected at the driving end of the lay, the fork might, and probably would, be actuated by the weft of one shuttle whilst another might be running empty. In such looms a delicate and ingenious contrivance termed a centre weft fork is sometimes fitted. It is arranged to feel and act for every pick, and, as its name implies, is situated at the centre of the lay instead of at one end.

Figs. 262, 263, and 264 show respectively front and side

elevations and a plan of such a motion. Fig. 263 is partly sectional in order to illustrate the parts more clearly. On the front of the lay A a bracket B is secured which carries a sliding piece C and the fork lever D—the latter being supported on its axis E by two centre studs F, F screwed in the ears of bracket B. Sliding piece C is kept in a vertical position by the heads of two screws G, G which pass through a slot in C and enter the bracket B. A ledge along the under side of B serves as a support for C, and also provides a surface on which the latter slides to right and to left in unison with the backward and forward movements of the lay. This endwise movement of C is obtained by means of a stiff wire J, which is attached at one end to the piece C, and at the other to a bracket bolted to the breast beam K. As the lay recedes, the sliding piece C is drawn to the right until the cam H, cast upon its upper edge, tilts up the lever D. When this occurs the prongs L (thin flat wires about $\frac{1}{8}$ in. deep and carried by lever D) are elevated sufficiently to permit the shuttle to pass.

The forward movement of the lay causes the sliding piece C to move to the left when the cam H passes from under the fork lever D, and the latter falls until, when weft is present, the prongs L are arrested by the weft (see Fig. 263). Under these circumstances the upper end of the arm M of the bell-crank lever (centred freely at N in the sliding piece C and having a heavy arm O) passes clear underneath the fork levers D as the sliding piece C moves to the left. If weft be absent, however, the prongs L sink immediately into a transverse groove P (about $\frac{1}{2}$ in. broad and $\frac{1}{2}$ in. deep) cut in the lay to receive them, and in which position they are supported by a crosswire Q (see low dotted position Fig. 263). If this occurs, the fork lever D interposes in the path of the upper end of arm M (see Fig. 262), which is

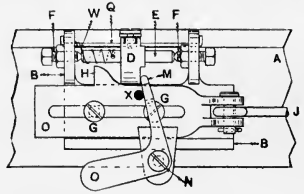

FIG. 262.

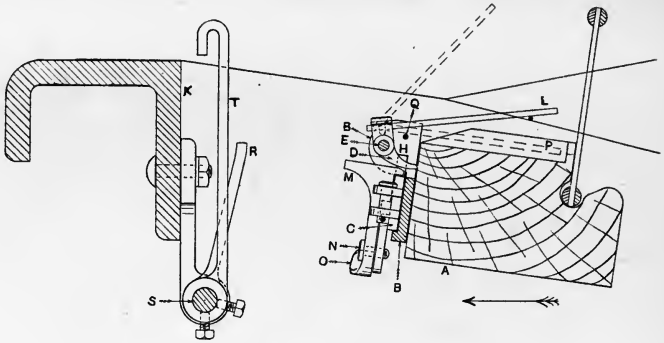

FIG. 263.

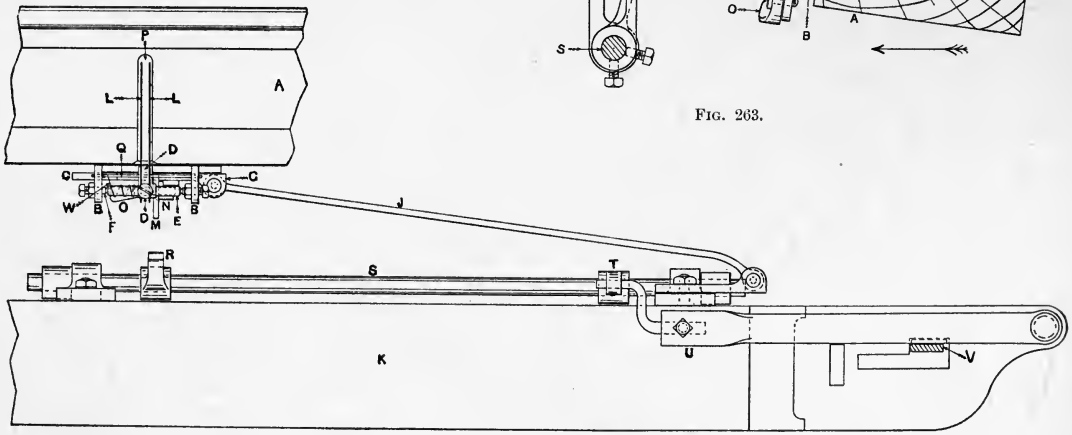

FIG. 264.

thus retained in that position—swinging on its centre N—as the lay moves forward and the piece C slides farther to the left. Under such conditions a projecting part at the extremity of the arm M strikes finger R; the latter is set-screwed on rod S, which is supported in brackets bolted to the breast beam K. Rod S, as well as lever T, is thereby partially rotated. T is connected at its upper end to the extremity of an ordinary set-off lever U, which is thus actuated sufficiently to push set-on handle V out of its retaining recess. A light spring W, coiled round the axis of D, ensures a practically certain action on the part of the latter, whilst a stop X, projecting from the face of C, prevents the upper arm of lever M O from falling too far forward.

The following points require careful adjustment :—

1. The travel of the sliding piece C, which is controlled by the travel of the lay and the length of the wire J.
2. The position of the finger R must be so adjusted that M will pass it when weft is present, but will strike it when weft is absent, and also move it sufficiently to drive out the set-on handle.
3. That at the commencement of each backward movement of the lay (*i.e.* when the fork lever D rests upon the upper end of arm M) the prongs L will not be elevated sufficiently to strike the under side of the cloth.
4. That when weft is present the prongs L will not be withdrawn from the support of the weft until arm M has moved underneath the fork lever D.

Buffers and Martingales or Check Straps.—In all looms with negative picking motions the mechanism employed for

the purpose of actuating the picking arm and propelling the shuttle is entirely independent of the means adopted to arrest the forward movement of the arm after it has ceased to act upon the shuttle, and to stop the latter when it has entered the shuttle-box.

For the former of these—that of arresting the forward movement of the picking arm K and the picker J (Fig. 265)—it is the general practice to employ a buffer B, located on the spindle C at the spindle head D. In picking, the picking cam causes the picker to be moved only a portion of the length of the spindle C (probably to about the point indicated by the letter C in the figure), but the momentum imparted to the stud, arm, and picker is such that they continue to move after the pick-

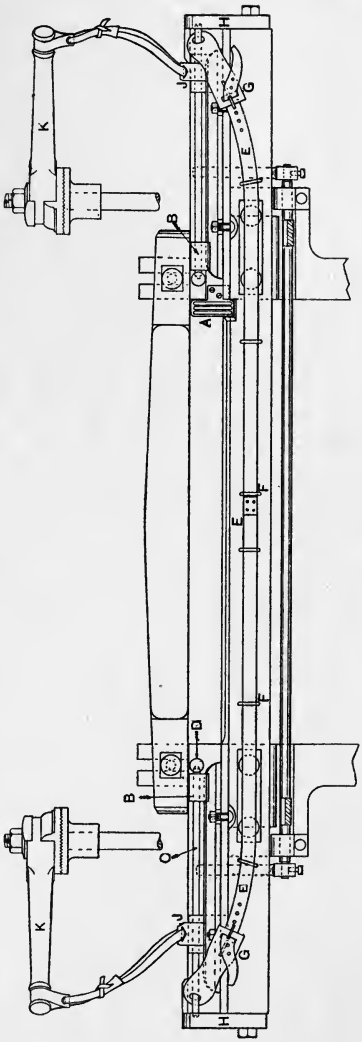

FIG. 265.

ing cam has ceased to act upon the stud. Then, as occasionally occurs, if no buffer is interposed between picker J and the spindle head D, the former strikes the latter with excessive force, the arm and strap are checked suddenly, with the result that the picker is unduly damaged, and breakages of the strap or arm inevitably result. The head D also gradually wears slack, and the spindle C begins to move about and erratic picking ensues.

Various forms of buffer are in use, that indicated consisting of two plies of heavy leather, 2 ins. broad, with the ends brought together and riveted in the form of some pickers, an aperture being left for the entrance of the spindle. Sometimes a length of strapping is taken, and holes punched in it at regular distances along its whole length, it being then doubled and threaded on the spindle. This leather, when first adjusted, forms an effective buffer, as it opens out along the spindle after the receipt of every impact, and thus forms a kind of spring which the picker has to compress. But this elasticity is not permanent, as with constant and after lengthened use the leather ceases to perform this desirable function. A serviceable buffer, and one which constitutes a satisfactory use for old belting or strapping, consists of a series of leather washers fitted on the spindle at the proper point. These can be readily made for the purpose by a simple punching machine. The main point is to secure a moderately compressible cushion between the picker J and the head D.

In addition to the swell arrangement in negative picking looms, a martingale or check strap is now almost universally used for receiving and checking the shuttle. It consists of a piece of strapping E about 1 in. broad and of suitable length, which is passed along the front of the lay and supported and guided at intervals by heavy iron staples F.

Each end of E is attached by a rough buckle to a leather tab G, about 6 ins. long and 2 ins. broad, which is rounded at one end and punched to receive the picking spindle C. The tab G is placed on the spindle between the back of the picker J and the box end H. Midway on the lay, two of the staples F are fixed from 5 to 6 ins. apart, and on the strap E at this point a second thickness of strapping, about 2 ins. long, is nailed; this piece, by butting against first one staple and then the other, checks the movement of the strap E in both directions. With 5 ins. between the staples and a check piece 2 ins. long, it is evident that the strap is allowed a travel of 3 ins. in each direction. The tab G should be adjusted to be $\frac{1}{2}$ in. clear of the box end H when pulled hard over towards it with the shuttle in that box, and the check piece of the strap bearing hard on the corresponding staple. The amount of travel allowed to the strap will in great measure depend upon the length of the spindle and the shuttle-box, but generally speaking it should be as much as possible. A travel of 3 ins. in a 45-in. reed space loom is not too much. If the travel be short and the shuttle be checked suddenly, it is practically equivalent to having no check strap at all, and results in the shuttle rebounding, in broken cops, and in ravelled pirns. Checking should not begin, however, until the shuttle has actuated the warp protector.

The check straps for most box looms are essentially of a different kind. One end of the strap is, as in the above case, placed behind the picker J, while the other end is fixed to the breast beam. The strap being of a fixed length, it follows that the position of the end behind J will vary with the position of the lay. Thus, when the lay is back and the shuttle approaching the box, the tab will be drawn from H, while from this point the strap can move

gradually towards H as the lay moves to its full forward position. In some box looms no check strap whatever is used.

The weft fork grate is indicated at A in the illustration, and one of the many methods of connecting the picking arm K with the picker J is also shown in the figure. Two short pieces of leather are taken and slotted at each end. One is passed round the groove on the end of the picking arm, and the other through the necessary opening in the picker. A long piece of strap is then slotted lengthwise near its broader or heavier end; the other end is passed through the ends of the leather on the arm, then through the ends of the piece in the picker, and finally is passed through the slot in the heavy end of itself, and tied in the manner indicated. This is a simple and satisfactory method of attachment. It affords a ready means of adjusting the length of the strap, and obviates the use of the somewhat dangerous bolt-and-nut attachment often found in jute-weaving looms.

Temples.—These are instruments the function of which is to distend the cloth from selvage to selvage or across the width of the piece while weaving. This statement presupposes a tendency on the part of the cloth to shrink in width during the weaving process; and although this is true with regard to the great majority of fabrics, yet there are a few, such as some heavy carpetings and mattings, in which the cloth width and the reed width are practically the same.

The causes tending to make a cloth shrink in width while weaving are many, and it may not be out of place to enumerate a few of them. Firstly, there is the nature of the fibre of which the yarns are composed, and the question as to whether it is elastic or inelastic. Jute and flax are

fibres possessing little or no elastic property, and hence yarns made from either material will not have the same tendency to shrink when relieved from the distending power of the reed, as will yarns made from an elastic fibre such as cotton or wool. Secondly, there is the nature of the weave. If a so-called square, balanced plain cloth—that is, one in which the threads and picks per inch are equal, and in which warp and weft are alike in size—be woven correctly, warp and weft will be equally deflected out of the straight line at the point of interweaving, and the contraction of each yarn will be approximately the same. If, however, the yarn beam be paced rather heavily, the increased strain upon the warp resists the bending power of the weft more effectually than before, and causes the latter to be deflected or bent more out of the straight line than formerly, with the result that the cloth shrinks more in the width. Conversely, if the yarn beam be paced too lightly, the warp may come off sufficiently slack to reduce its bending power below that of the weft, with the result that the latter remains almost in a straight line, and the cloth is kept more nearly the full width. It is, of course, evident that any decrease or increase of width due to the above-mentioned causes will be accompanied by a corresponding increase or decrease in length respectively; and for very similar reasons to the above, the contraction is greater with positive than with negative uptake motions. These facts are very generally known in the factory, but their underlying causes are not so widely understood. In plain weaving there are what might be termed two extremes in structure, between which the balanced cloth forms the mean. In one extreme the warp may lie perfectly straight and the weft do all the bending, in which case the shrinkage in length will be at a minimum and the contraction in

width at a maximum ; while in the other extreme the weft may lie perfectly straight and the warp do all the bending, in which case the contraction in width is practically *nil* and the contraction in length at a maximum. In a plain weave the intersecting of the warp with the weft is at its highest point, and contraction both in width and length from this point of view is also at a maximum. Any change of weave or of the interlacings of the warp with the weft must therefore result in a reduction of the percentage of contraction, provided other things, such as the sett and the size of the yarns, remain constant. These, however, vary in great degree, and we must consider the effect of such variation.

Any increase in the sett of the warp beyond the square reduces in a sense the opportunity of the weft to be deflected—in fact, it approaches that extreme condition where the volume of warp is such that the weft is entirely prevented from bending and the shrinkage in width is reduced, while any increase in the picks beyond the square approaches the other extreme condition, where the volume of weft entirely prevents the warp from bending, and in consequence the bending of the weft, and therefore the contraction of the cloth, is increased. In changing the size of the yarns, as, for instance, reducing the size of the weft, the weaker thread—that is, the weft—is less able to resist the bending power of the warp, with the result that increased bending of the weft, and therefore increased contraction in the width, takes place. The use of weft heavier than the warp will of course have the opposite effect. Increasing or decreasing the size of the warp is equivalent to decreasing or increasing the size of the weft respectively, with the corresponding result.

The operation of distending the cloth during weaving

might seem at first glance to have for its principal object the influencing of the ultimate width of the fabric. But this is true only in a very small degree. The chief reason for distending the fabric from selvage to selvage is to minimise as much as possible the lateral strain of the warp upon the dents of the reed at and near the selvages, and to reduce the tendency of the reed to saw and chafe the warp at these points. This tendency of the reed will, it is obvious, increase with the fineness of the fabric, since the dents of the reed itself have naturally to be finer or sharper; and, further, as the picks per inch are increased, the warp is subjected for a longer period of time to the friction caused by the moving reed, and also in an increased degree to the influence of the reed in beating up. Occasionally reeds are built with slightly heavier wires near the ends in order that they may withstand more successfully the lateral stress of the warp at and near the selvages.

An incidental advantage in the use of temples is that a better shed usually results at the selvages, as the warp at these points has not the same tendency to hang slack, as is the case when no temples are used. According to the fineness of the fabric and to its tendency to shrink in width while weaving does the use of temples become necessary.

The elastic nature of the cotton fibre makes the use of temples imperative in the weaving of almost all cotton and union fabrics. In certain fabrics of this kind it is not unusual to find the temple in the form of an iron roller A, Fig. 266, which extends across the entire width of the fabric. This roller is supported by and rotates in a cast-iron trough B which is fixed on the top of long vertical spring bars C in front of the breast beam in such a manner as to be movable to and from the reed, and thus provide an escapement for the shuttle should the latter fail to enter the box

in time. With the exception of a few inches in the centre, the roller A is case-hardened and fluted along its entire length. On each side of the central or plain portion a screw thread (right-hand at one end, and left-hand at the other) is cut across the flutes in order to form teeth which will grip the fabric. As the fabric leaves the reed, it passes over the edge of the trough B, encircles fully half the circumference of the roller A, and then passes over the other edge of the trough to the breast beam. This roller temple is most suitable for plain fabrics of light to medium weight.

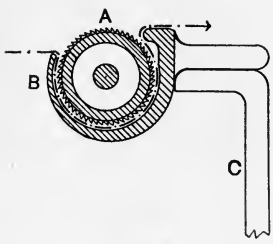

FIG. 266.

The fact that a considerable portion of the cloth is hidden from the weaver immediately after being woven renders this type of temple unsuitable for figured fabrics, and its distending power partakes more of the nature of an uptake roller than of a temple proper. In certain types of looms the two functions are combined in one roller, which occupies the position of the breast beam in an ordinary loom, and acts in a way as uptake roller and roller temple combined. Its effect is, however, often supplemented by side temples.

In jute weaving, due primarily to the inelastic nature of the fibre and to the comparative coarseness of the fabric generally woven, temples are unnecessary, and their use is practically unknown. A similar state of matters obtains in the coarser end of linen weaving, such as canvas, sheetings, and heavy plain cloths generally; and even in the weaving of the finer grades of linen damasks considerable difference of opinion exists as to whether temples are desirable, far less a necessity, until a moderate width of fabric (say

$1\frac{1}{2}$ yds.) is reached. As a matter of fact, fine damasks of this width are regularly woven without the aid of temples. In all heavily picked linens, however, no matter of what width, their use would be undoubtedly beneficial.

In the wider fabrics, where the production is a comparatively slow process, the hand temple indicated in Fig. 267 is still extensively used. It consists of two wooden arms D, which are fitted with a series of sharp spikes E at their outer and broader ends. The inner end of each arm D overlaps a third piece F as shown, and D and F are each drilled at intervals to receive a lacing cord G, which is adjusted to regulate the minimum distance between the two spiked ends. Snibs H screwed to bar F permit of the

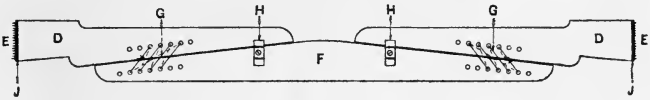

FIG. 267.

temple being released from its position in the cloth, and by projecting across the arms D keep the temple distended when in position. Spikes E are inserted into the cloth about $\frac{1}{4}$ in. from the edge of the selvage, the cloth being protected from the action of the wood by a piece of leather lace J pressed to the roots of the spikes.

By far the most popular and widely used temples are the roller temple and the self-acting one known as the segmental ring temple; the plan of one type of the latter is shown in Fig. 268. It consists of a spindle K on which are fitted a series of inclined brass rings L, about $\frac{7}{8}$ in. diameter by $\frac{3}{16}$ in. thick, having one or two rows of short, sharp spikes projecting from their periphery. This spindle is bolted in the temple-holder M, which is then passed through the

bracket N, the latter in turn being bolted, near the selvage of the cloth, on a round or a square rod O attached to the front of the breast beam. In cases where the temple is not provided with a proper shuttle escapement, the spring of the rod O enables the temple to recede should the shuttle

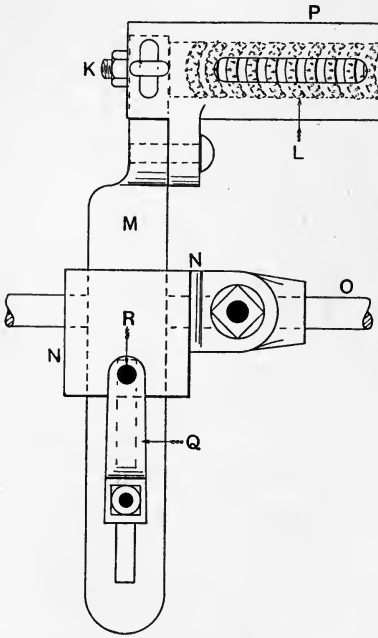

FIG. 268.

and the temple come in contact. A brass cover P, screwed or snibbed to the holder M, fulfils the double purpose of protecting the weaver and of deflecting the cloth sufficiently to grip the rings L. As these rings rotate with the movement of the cloth, the first point of contact of the latter with the rings compels the cloth to move outwards, this

being due to the inclination at which the rings are set. The inclination varies in different temples, but a medium angle similar to that illustrated is about 20° from the vertical. The number of rings on one spindle may vary between 1 and 30, but a common number is 10 or 12. Since the pitch between the rings is about $\frac{5}{16}$ in., it will be seen that the temple can project some little distance, say about 3 ins., under the cloth. Now the threads forming the selvage are invariably closer together than those which form the body of the cloth, hence in open sets the ground threads are more susceptible to deflection under the outward pressure of the rings. In many cases this becomes very troublesome, since it leaves an apparent reed-mark which is difficult, and in some instances impossible, to remove. In order to avoid this defect, the temple is sometimes made with the rings varying in angle from approximately vertical at the extremity of the spindle to over 20° from the vertical at the butt or selvage end. The greater majority of those in use have, however, only one angle. The temple is capable of vertical or lateral adjustment in virtue of its fixing on the rod O, while the shuttle escapement is of the following nature. The holder M is slotted to receive the fixing bolt of a flat spring Q, in the forward end of which is riveted a nipple R. This nipple, which projects from the under side of Q, enters a corresponding countersink in the upper side of the bracket N—through which the holder passes—and retains the holder forward in the desired position. Should the shuttle strike the temple, the spring Q yields and allows the holder M to slip backwards.

Details of the structure of the temple are shown in Fig. 269. Here the spindle K is in side elevation. Fixed at the spindle end is a tapered collar S, which has its face inclined at the predetermined angle and its centre or boss

T continued at right angles to its face to form a centre of rotation for the first ring L. Fitted next upon the spindle is an elliptical washer U, the inclination of which corresponds with that of the collar S, and the centre of which is also continued at right angles to its face to form a centre for the next ring. Washers and rings are then slipped on in succession, until the desired number is attained. A second collar V follows the last ring upon the spindle K, which is then bolted in the holder M. The centre piece T of each washer is slightly longer than the thickness of the rings L in order that the latter shall have freedom to rotate. The clearance, however, is small, and in order to obtain the best results the temple must be kept scrupulously clean. Dust and loose threads readily choke them and prevent the rings rotating.

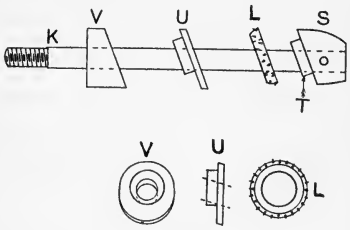

FIG. 269.

The small roller temples also grip from 2 ins. to 4 ins. of the fabric. They are much simpler and less scientifically made than the above, since they are simply small wooden or metal rollers into which fine pins are inserted, but for light to medium goods they are fairly efficient. One, two, or three of such rollers may be used for each temple.

Shuttle Guards.—The name applied to these contrivances is slightly a misnomer, as in no sense are they intended to guard or protect the shuttle, but rather the weaver and other persons against the shuttle. They fulfil no part in pure weaving operations, but instead serve to indicate by their presence upon a loom that weaving machinery is yet in a state of imperfection. Their use is an attempt to

anticipate an undesirable result rather than to eradicate its cause.

Under certain conditions it becomes a very difficult matter to prevent the shuttle from flying. If this were not the case there would be no use for shuttle guards, neither would the factory inspectors insist upon such guards being placed on the looms. There appears to be more shuttle-flying with light shuttles than with heavy ones, but this is probably due to the fact that the momentum of the heavy shuttle, even with its comparatively slow velocity, is greater than that of the light shuttle with its high velocity; in consequence, the heavy shuttle is better able to force its way through the shed rather than be turned aside by an obstruction, unless that obstruction be an imperfectly fitted reed, which will cause any shuttle to fly out.

One source of shuttles flying to which all alike are subject, is broken warp threads or other like matter causing a mixing of the upper and lower portions of the shed, with the result that the shuttle possibly rises over instead of passing under the mixed portions. In order to obviate this and to keep the shuttle close to the reed and the race, many artifices are tried. Sometimes the raceboard of the lay is made with a gentle and very slight decline from the shuttle-boxes to the centre, and in like manner the reed is made slightly concave. The outcome of this in many over-pick looms is that the picking spindle is raised slightly at the head and brought nearer the front at the same point, so that the picker may alter the position of the rear end of the shuttle in a similar way, with the view of causing the fore end to seek the race and the reed. A good method is to have the point of the shuttle as low as possible so that there will be a tendency for it to pass under instead of over

any entangled threads. In underpick looms, although the picker may be guided in a practically horizontal course, yet it is constantly changing its angle, and at the last moment may slightly deflect the rear end of the shuttle, with the result that the fore end rises instead of lying to the race. To minimise this as far as possible, arrangements are made in some looms to traverse the head of a stick in a horizontal line instead of in the arc of a circle, and in other looms by means of a shoe at the lower end of the stick to raise the latter slightly, and with it the end of the shuttle at the finish of its stroke. The above-mentioned method of having the point below the centre of the shuttle also minimises the tendency of the picker to deflect the rear end of the shuttle.

In most cases shuttles are provided with a tipped end as shown in Fig. 270, and the picker, if not countersunk to correspond to this shape, quickly assumes it, and thus controls the rear end of the shuttle to such an extent that the movement of the latter is materially influenced by the movement of the former. This we consider the weak point of the arrangement; indeed, the picker has too much grip of the shuttle, and the slightest displacement of the former either laterally or vertically is conveyed to the shuttle, with occasionally serious results. Very few centre-tipped shuttles are in use in the large textile districts of the north and east of Scotland. The type of shuttle tip used in these districts is indicated in plan and elevation in Fig. 271. In this case A, the tip proper, has its centre line about a quarter of the total breadth from the back, and about three-eighths of the total depth from the bottom of the shuttle. At B, the part on which the picker acts, the tip is flat (and consequently the picker is not so readily damaged), while its face is about one-half the breadth by one-quarter the depth of the shuttle. In this, as it should be in all shuttles,

the centre of the tip is below the centre line of the shuttle, with the view of causing the shuttle to pass under any broken or imperfectly lifted threads. In addition, the tip will pass more easily and safely under the crossing threads of those centre selvage motions which are operated without under connections. This type has the additional advantage of the tip being near the reed, and therefore much more likely to take the proper path in a mixed shed. A further advantage is that the picker cannot grip or control the rear

FIG. 270.

FIG. 271.

end of the shuttle in the same manner as it does those with "centre" tips. A third and important point is that the line of force of the pick is applied in front of the centre line of the shuttle, which is thus compelled to seek the support of the shuttle-box back and the reed. In the other type of shuttle the tip is placed in some instances with its centre above and in front of the centre line of the shuttle, with the view of causing its head to seek the race and the reed, but this position makes it more ready to rise over mixed portions of the shed. So much is this the case that we have known many instances where the shuttles have

had their under sides dressed down in order to reduce their tendency to rise, or if possible to prevent them from rising.

In other cases the centre of the tip is nearer the back and the bottom, so that it may avoid mixed portions of the shed; but in this position the line of force is behind and below the centre line of the shuttle, thus giving its head a tendency to turn in an upward and outward direction. Again, as in Fig. 270, the centre is found midway from front to back, but a little under the centre line. This is probably a better arrangement than either of the two foregoing, but in our opinion it is still a long way behind the flat or "side" tip of Fig. 271. With continual use the shuttle becomes worn and rounded from both ends towards the centre, and when in such a condition it is very liable to fly; worn pickers also often result in the shuttle leaving the race and shed.

Of shuttle guards there is an extraordinary variety, the result of combining, or of attempting to combine, efficiency and cheapness, but the one which will give least trouble to the weaver in the end, be the least expensive to begin with, and keep in order for the longest period, is, we believe, an iron rod of $\frac{3}{8}$ in. to $\frac{5}{8}$ in. diameter rigidly bolted to the upper shell or reed cap, and inclined at such an angle as not to interfere with the yarn in the shed. The fittings of many guards are such that in a week or two the guard is falling away from its position on the reed cap. In other cases, where it is not rigid, but folds back out of the weaver's way when mending broken threads, and is supposed to return automatically to its guarding position when the loom is restarted, it gets readily out of order, and it is often found tied back permanently by the weaver, or else wobbling inefficiently in front of the reed. We think, however, that if the flat or "side-tipped" shuttle indicated were more

universally adopted, the necessity for shuttle guards would be much reduced.

CHAPTER XIX

TURKISH OR TERRY TOWEL MOTIONS

In the weaving of a certain class of pile fabric requiring two warps—one of which in conjunction with the weft forms the ground of the fabric, while the other forms the pile—it is necessary to employ a motion which will either give the lay and the reed a variable movement as regards the full forward or beating-up position of the latter, or so control the reed as to cause it to swing upon its upper rib as a centre and thus vary its beating-up position. Such arrangements of mechanism are termed terry motions, and are used to place two or more successive weft shots in position a short distance behind the fell of the cloth proper, where they are interwoven with the pile and ground warps, but after the third shot, to lock the reed in its normal position, and so to press forward all three shots at once to the fell of the cloth. In so doing the weft threads pull forward the warp threads from the pile beam which is lightly tensioned, while they slip over the warp threads from the ground beam which is heavily paced. The result is that the pile warp threads, which before being beaten up stretched across the gap between the few picks and the fell of the cloth, become doubled up in loop form, and constitute a line of pile across the cloth from selvage to selvage.[1] One or more picks may then be put in with the

[1] See chapter xx. Turkish Towelling, or Terry Fabrics, pages 414 to 428, *Textile Design: Pure and Applied.*

locked reed to bind the pile warp firmly in position, after which the same operations are repeated.

Terry fabrics are known as 3, 4, 5, or 6 pick terrys according to the number of picks employed in forming one row of pile loops. Jute yarns even as weft are very seldom employed in the manufacture of terry fabrics, but linen yarns are used for both ground and pile warps, and also for weft. Most fabrics of this type are, however, made either entirely of cotton yarns, or as unions of cotton and linen, the latter being used for the pile.

In motions where the reed is rocked out of the normal position when beating up, it is necessary to provide means to close it again as the lay recedes in order that the shuttle will be properly supported as it crosses the lay.

Of the two systems of forming gaps, (*a*) by varying the movement of the lay and reed, or (*b*) by swinging the reed out of position only, the latter is probably the simpler and the more widely applied, and one of the best known of this type is that made by Messrs. Hacking and Co., Ltd., Bury.

In this motion, two views of which are shown in Figs. 272 and 273, the lay A and the upper shell B are secured to the swords in the usual manner. The underside of B is, however, specially formed to permit of the free movement of the reed C backwards, although the latter cannot leave the groove in B without being moved in an end-long direction. The lower rib of the reed C is supported as shown in a grooved carrier bolted to the upper ends of two arms D, which are in turn bolted on a large diameter hollow shaft E. This shaft E is carried in two brackets bolted to the lay swords, and therefore partakes of the usual movement of the swords and lay A. One ear of the sword arm is extended behind the connecting pin to provide a fulcrum at F for the lever G, the straight or pendant arm of which

is connected to arm D by a strong spiral spring H as shown, while the curved arm extends at right angles to the pendant arm and carries an adjustable stop-piece J, the function of which is to determine the extent to which the reed C may be opened, and therefore the length of pile which may be formed. Under normal conditions the action and strength of spring H is such that the lever G assumes the position

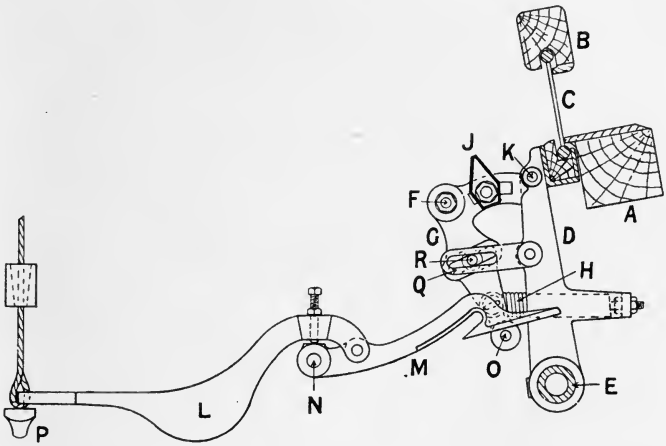

FIG. 272.

shown in Fig. 272, where the extremity of the curved arm of G is acting against stud K on arm D, and thus locking the reed C in its normal position. Provided no change takes place in the position of lever G, the reed would continue to beat up as in an ordinary loom, but further parts are provided to open the reed as required. These consist of a compound lever L M fulcrumed loosely on stud N; the latter is bolted to the framework, and stud pin O is bolted in the lower extremity of lever G. Arm L of the

lever L M is so weighted that it tends to rest on its supporting bracket P, and so keep the hooked arm M raised clear of the stud pin O. But when an open reed or "loose pick" is wanted, the arm L is raised by connections from the dobby, see Fig. 273, and the hooked arm falls and arrests pin O in its forward movement; this causes lever G to swing on its fulcrum F, and permit stud K and arm D to

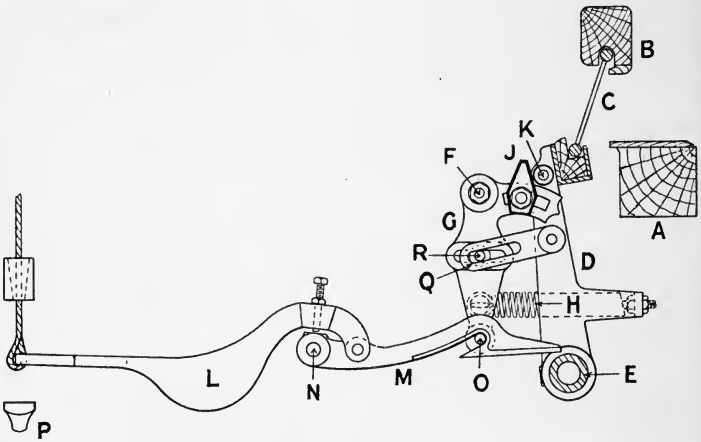

FIG. 273.

recede under the pull of spring H, and as far as the stop-piece J will permit. Further forward movement of the swords and the arm D will simply extend spring H. As the lay and swords again recede, the spring H closes the reed through the action of lever G, and the arm of the sword comes into contact with the stud pin O and carries it back clear of the hook on arm M. Link Q and stud R are provided to ensure that the reed will be opened, and that it will remain open when stud K impinges on the stop-piece J.

Figs. 274, 275, 276, and 277 show front elevation, plan, and two end sectional elevations of another type of loom for weaving terry fabrics. This motion, in which both the reed and the supplementary lay receive the varying movement, is made by Messrs. William Dickinson and Sons, Blackburn. A is the wyper shaft of the loom, and B is the shaft to which the shedding tappets are fixed. The latter shaft is driven from A by the three wheels C, D, and E,

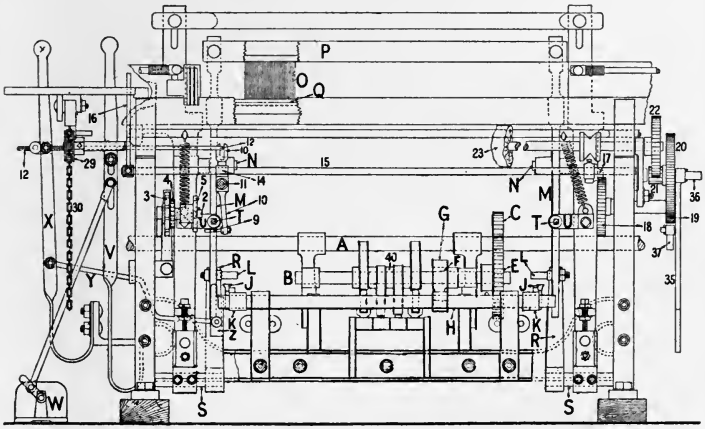

FIG. 274.

the central wheel being simply a carrier, while wheels C and E are in the ratio of 2 to 3—hence the tappet is for a 3-pick terry. A small cam F is set-screwed to shaft B, and gives motion to the reed in the following manner: a lever G, set-screwed to the shaft H, rests upon the top of cam F, and is actuated by it as shaft B revolves. A similar movement is given to the two levers J, which are fixed by the adjustable brackets K to the shaft H. It will be seen that the highest and lowest positions of these levers

G and J and the cam F are shown respectively in Figs. 277 and 276. Studs L on the lower ends of the supplementary swords M engage with levers J every third pick. These swords are pivoted on studs N fixed to the ordinary swords of the loom. To the upper ends of swords M the reed O is attached and held in position by the top shell or cap P and the lower shell Q. The levers are so adjusted that when they come into contact with the studs L the lower parts of supplementary swords M are pushed back, and the

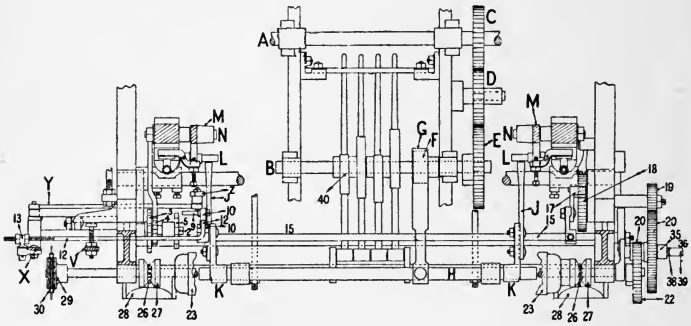

FIG. 275.

upper parts containing the reed are forced forwards a distance equal to the length of gap required for the formation of the loops of the towel. Two flat springs R, Fig. 276, fixed to brackets on the rocking shaft S, and pressing against the supplementary swords M, keep the reed in its normal position, and also return it to that position after it has been forced forwards by the above-mentioned action of levers J. The studs on the supplementary swords M can be adjusted in the slots for variations in the length of the pile. The lever J can also be lengthened or shortened to act on the studs L earlier or later, and thus increase or decrease the

size of the loops. The backward movement of the upper part M is limited by arresting the forward movement of the lower part by adjustable set-screws T in brackets U, fixed to the ordinary sword.

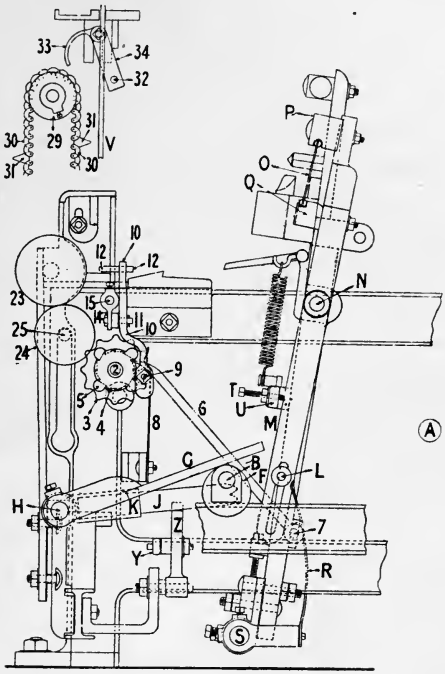

FIG. 276.

V is the ordinary set-on handle of the loom, and controls, as shown, the electrical switches in box W—the loom being driven by a small motor. A second handle X is provided for the purpose of controlling certain mechanism when the plain part, border or otherwise, is to be woven. When it

is necessary to discontinue the formation of the pile, and to weave simple unlooped cloth, it is essential that the reed O should come full forward every pick; consequently arms J must come into contact with the studs L every pick during this period. The handle X is in the on-position, as shown in Figs. 274 and 275, when pile is being made, but if the handle be moved to the off-position, *i.e.* to the right, the connecting rod Y, which is fixed at one end to X and at the other end to a point near the upper end of a vertical locking lever Z, is also moved to the right. This places the ledge of the locking lever Z underneath the lever J, and thus keeps it up and in the line of the stud L. It is of course understood that both arms J move in unison. Immediately the handle X is moved to the on-position when pile is required, the locking lever Z is simultaneously withdrawn from under the lever J.

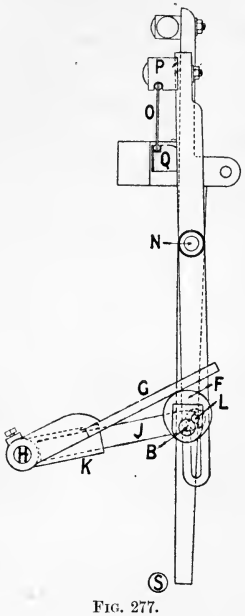

FIG. 277.

Projecting from the inside of the framework is a stud 2, upon which rotates the 12-lobed star wheel 3, ratchet wheel 4, and the 4-lobed plate 5. All three are compounded, and are driven one-twelfth of a revolution every time the lay comes forward by a long pawl 6 fulcrumed on a stud projecting from the ordinary sword. The 12-lobed star wheel 3 acts simply in conjunction with the flat spring 8 as a steadying motion. Since these parts rotate one-twelfth of a revolution every pick, and since plate 5 contains 4 lobes,

it follows that one or other of these lobes will pass any fixed point every third pick. When handle X is in the on-position and the loom making pile, the parts 3, 4, and 5 simply rotate one-twelfth of a revolution every pick, but are out of action with pin 9. If, however, the handle X be placed in the off-position when plain or unlooped cloth is being made, the pin 9 is brought into line with the 4-lobed plate 5, and is, consequently, pushed out a short distance every third pick. The pin 9 is fixed in the lower end of a lever 10 fulcrumed on stud 11, and the upper end of lever 10 is forked to receive one end of rod 12; the other end of rod 12 is attached to handle X by small bracket 13. The stud 11 is fixed to a small bracket 14 set-screwed to rod 15, and the two ends of this rod carry respectively finger 16 and retaining catch 17. When pin 9 is forced out by one of the lobes of plate 5, it is clear that rod 15 will be slightly rotated through lever 14, and hence the retaining catch 17 will be raised clear of the ratchet wheel 18 of the uptake motion. This naturally allows the uptake motion wheels to return for that pick, which is equivalent to keeping the cloth stationary, and increasing the number of picks per inch in that part of the cloth 50 per cent.

Wheels 18, 19, 20, 21, and 22 form the ordinary 5-wheel uptake motion, and impart movement to the spiked roller 23. The cloth roller 24, shown only in Fig. 276, is kept in close contact with the spiked roller 23 by means of a chain 26 hooked to a small collar on the cloth roller shaft 25, passed round grooved chain guide 27, which runs loosely on the arbor of spiked roller 23, and finally attached to a heavy weight 28. On the left-hand end of spiked roller 23 is fixed a sprocket wheel 29, see also detached view in Fig. 276, suspended over which is a governing chain 30 made up of small and large links.

The large links 31 are for the purpose of pushing set-on handle into the off-position by means of pin 32 and finger 33 of bracket 34. From the detached view it is evident that, as the chain rotates slowly counter-clockwise, the link 31 will ultimately press finger 33 to the left, and at the same time pin 32 will come into contact with handle V and thus stop the loom.

Fifteen links represent one complete revolution of spiked roller 23 or 15 ins. It is evident, therefore, that each link, large or small, represents 1 in. of cloth. In the chain shown in detached view in Fig. 276 the large link acts every 20 ins. When the handle Y is knocked off by means of the chain, the weaver moves handle X to the opposite position always, except when it is necessary to form a fringe, and then restarts the loom.

When fringes are being made, the uptake motion may be moved rapidly by means of handle 35, fulcrumed at 36, and pawl 37. To remove the cloth from the cloth roller, pin 38 is placed in hole 39, and the double intermediate 20 and 21 withdrawn from contact with wheel 22; the cloth roller can then be rotated easily. The arrangement as shown with 4 blades in tappet 40, and cam F on shaft B, is suitable only for a 3-pick terry; other terrys may, however, be made by substituting at C and E wheels of the proper relation, and suitable tappets in place of those shown at 40. For more elaborate patterns, the arms J may be operated by means of a hook in the dobby connected to a lever fulcrumed at H and used instead of lever G.

Messrs. Hacking and Co., Ltd., also provide their looms with special motions for the weaving of Turkish towels. All these motions may be controlled, when necessary, from the dobby. The various functions performed by these

extra motions are: the removal and the replacing of extra tension on the pile warp beam during the working of the end borders; the controlling of the shuttle-boxes for colour, and the uptake motion for an increase in the number of picks per inch; the rapid withdrawal of the warp so as to leave sufficient for the fringes during the time that the loom runs a few shots. All these operations are performed without stopping the loom, and when an automatic cross-border dobby is used, the changes of weave may also be made without stoppage.

Another terry motion made by Messrs. Lupton and Place, Ltd., Burnley, is illustrated in Fig. 278. A >-shaped heater A and sliding parts B and C are all connected by means of a hook D to a leather band E. This band passes, as shown, over roller F and under roller G, and is then continued to a hook in the dobby. Bracket H is bolted to the sword J, and supports oscillating lever K fulcrumed at L. The upper end of lever K is kept in close contact with the back of the bottom shell M, while its lower or forward end carries an anti-friction bowl N. The terry box O is bolted to the framework of the loom, and the lowest position of the sliding piece B is determined by the cushion P, which is in turn regulated by the set-screw Q and held in position by lock-nut R.

It is evident that when the lay moves forward, the bowl N can be made to come into contact with either the upper or the lower face of A, according as the latter is left down or raised by means of a hook in the dobby. It is evident that the lever K will be pressed hard against M for the proper beat up when the bowl N comes in contact with the under part of A. If, however, the bowl N rides on the upper part of A, it will cause the upper part of lever K and the bottom shell M to move backwards for

the loose pick. Any type of terry can therefore be made by controlling the movement of A for the necessary number of times in a repeat.

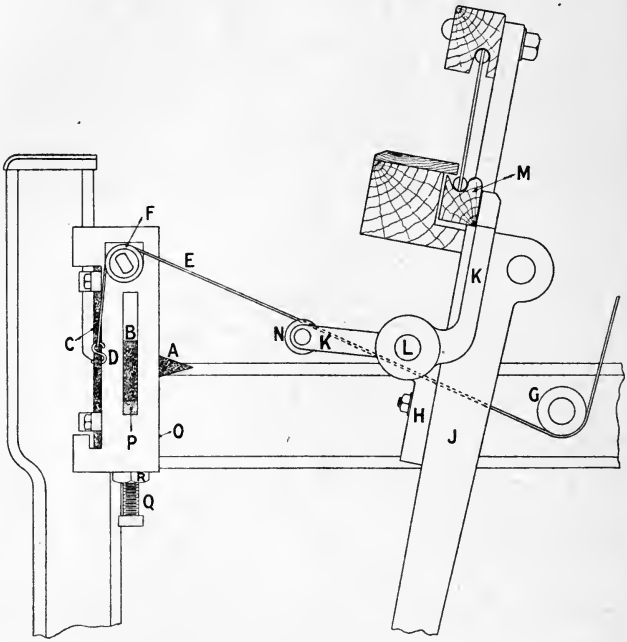

FIG. 278.

CHAPTER XX

AUTOMATIC WEFT SUPPLY

MECHANISM for the automatic supply of weft is of two general kinds—that which changes the shuttle and its contents, and that which changes the contents of the

shuttle only on the expiry or partial expiry of the weft. Mechanically, the former method of changing seems to be the easier, since many inventions of comparatively recent date have been placed on the market for this purpose, as against a very few which change the pirn or cop in the shuttle. From an economical point of view it appears more desirable to change the pirn or cop rather than the shuttle and pirn together, since in the former case only one shuttle per loom is required, whereas in the latter four to ten shuttles per loom, depending upon the size of the shuttle, may be required. Further, it is more difficult and troublesome to fit a large number of shuttles accurately to a shuttle box than to fit one, and, besides, shuttles are more liable to be damaged during a change than are pirns, no matter how slowly the shuttles are ejected.

Shuttle-changing mechanism may act in a number of ways; it may change a shuttle without losing a pick, with the loss of one or two picks, or by stopping the weaving motion of the loom for a greater number of picks, during which time the shuttle is changed and the loom restarted automatically. Amongst the several ways of ejecting the shuttle are the following:—

1. At the box front, where a new one is also inserted;
2. At the back of the box;
3. The bottom of the box is lifted at the inner end, so that the shuttle, instead of entering the box, passes through the opening between the box and the end of the raceboard and into a receptacle;
4. The shuttle is ejected sideways;
5. The circular box movement is made use of;
6. The drop box principle is adopted.

Of pirn or cop changing mechanisms the best known is the Northrop: at the time of writing, 1914, there are over

15,000 of these looms at work in the British Isles weaving various kinds of fabrics—principally cotton—besides large numbers on the Continent and in North and South America. The main idea of this changer is very simple, but, as in the case of all pirn changers, it centres round, and the change is entirely dependent upon the operations on the pirn in the shuttle, and the automatic threading of the weft during the first two picks after the change of pirn or cop is effected. All changes take place without the slightest cessation of movement or stoppage of the loom.

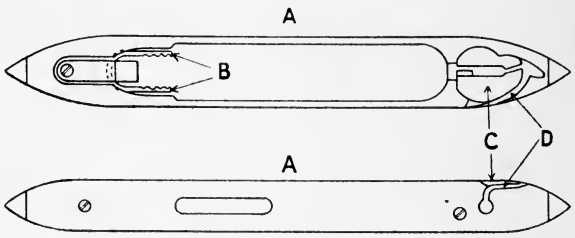

FIG. 279.

To facilitate the change, the shuttle A, Fig. 279, about 16 ins. long and taking a pirn up to 7 ins. in length, is provided with two powerful steel spring jaws B, the inner curve of each jaw being furnished with four grooves which grip and hold the butt end of the pirn by means of three thick wire rings securely fixed upon it. In the other end of the shuttle a brass casting C is fitted, which is provided with a slot so formed and moulded that the weft thread from the new pirn is drawn into it as the shuttle crosses the lay for the first pick after a change has taken place. On returning for the second pick, the weft is drawn down the curved groove D between the brass and the wood into

the eye of the shuttle. A horn or barb on the brass prevents the accidental return of the weft up the groove.

Full pirns, to the extent of twenty-five as a maximum, are fixed in a circular and rotatable hopper E, which is always situated on the right hand end of the breast beam, at which end of the lay all changes must take place. Hopper E consists of three discs, E, E′ and E″, all moving together, but capable of being independently set, as regards E′, to accommodate different lengths of pirns, and in the case of E″ to adjust the inclination of the weft threads F to the proper angle for threading. Spring castings in E grip the butt ends of the pirns, permit their ready entry into the hopper, and their free expulsion when changing. The next pirn to be transferred to the shuttle, see Fig. 283, which is a part sectional and part end elevation of the transferring parts, is always at the lowest point in the periphery of disc E with the pirn head immediately underneath the end of the transfer hammer G. A cross sectional view of the shuttle A, the shuttle box and lay H are given, from which it will be seen that the shuttle, in common with all pirn shuttles and all shuttles for skewered cops, is open both at the top and bottom, and that the shuttle box and lay also have each a similar opening through which the empty pirn may be expelled by the forcible entry of a full one from the top side. The transfer hammer G is fulcrumed at J, and a second arm K is continued downwards to support on fulcrum L a notched lever M which, through the influence of coiled spring N, Fig. 280, always tends to rise (see dotted position, Fig. 283) into the path of the bunter O secured to the face of the lay. Should this take place, M and O become locked and, as the lay moves forward, the end of hammer G presses the new pirn into the spring jaws B of the shuttle, and the

new pirn as it enters forces the old one out. Arm P carries at its extremity a spring finger Q which supports and steadies the extremity of the pirn about to be inserted.

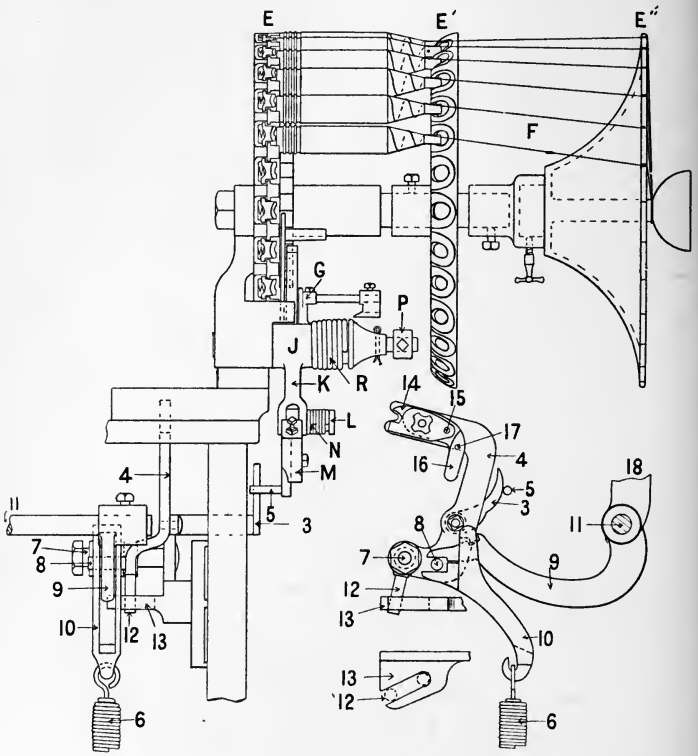

FIG. 280.

Transfer hammer G is returned to its position of inaction by a coiled spring R, Fig. 280, and, as the hammer returns, the hopper E is partially rotated clock-wise by the following means to bring the next pirn under the hammer head.

Between the arm of G and the inmost disc E are fulcrumed a retaining pawl S and a moving pawl T, see enlarged view at the base of Fig. 283; the moving pawl is fulcrumed loosely on pin U projecting from the framework, and a pin V projects from the inside of the arm of G into a slot in pawl T. As G descends to transfer a pirn, the pin V depresses pawl T beneath another tooth of the ratchet wheel W cast on the face of E, and at the same time compresses the spring X acting on the underside and slightly to the left of T. When G is released by the backward movement of the lay and rises under the pull of spring R, the spring X pushes up pawl T and rotates the hopper until the movement is checked by the next pirn head impinging against the stop Y. Pawl S prevents rotation in the opposite direction, but by means of projection Z cast on the side of S, and a further pin 2 which enters a triangular opening in T, both pawls may be withdrawn and the hopper rotated by hand.

It is now necessary to trace in what manner the notched lever M is permitted to rise in front of the bunter O, and for this purpose further reference is made to Fig. 280. Under normal conditions, M is retained in the position of inaction by the backward pressure of a curved finger 3, which is securely bolted in the side of the shuttle detector lever 4, and acts on lever M by pressure on projecting stud 5, under the influence of a strong spiral spring 6. The shuttle detector 4, which is fulcrumed on stud 7 and is shown detached in the view on the right, is one of the most important parts of the mechanism, since by its means a change of pirn is permitted, or is prevented should a shuttle fail to enter the changing box properly. It contains the mechanism by means of which the weft of the expiring pirn is severed from the pirn, and by which the severed end is

carried back into a holder—not shown in the figures—where it is retained till it is further severed by the temple about half an inch from the selvage of the cloth. Immediately to the rear of the fulcrum of the detector lever 4 is a second stud 8, which projects into a jaw formed by the extremities of two pieces 9 and 10; part 9 is an arm secured to shaft 11, which extends along the front of the breast beam, while part 10 is a three-armed lever fulcrumed by one of its arms near the extremity of arm 9, while the second arm is kept hard in contact with the underside of stud 8 in lever 4 by the pull of spring 6 on arm number three. This last arm extends about $1\frac{1}{2}$ ins. to the right of the fulcrum, so that when arm 9 is raised by the partial rotation of shaft 11, the pull of spring 6 causes the second arm of lever 10 to press stud 8 upwards and the detector lever 4 inwards until the projecting head of the latter crosses the race of the lay completely, just at the entrance to the shuttle box at the change end of the lay. Should the shuttle be in its correct position in the box, the curved finger 3 moves forward and permits stud 5 and lever M to rise to complete a change, but, should the shuttle project from the box and so obstruct the forward movement of the head of lever 4, stud 8 fails to rise, and the spring 6 yields to a greater extent than usual and permits arm 9 to rise and the jaw enclosing stud 8 to open. At the same time parts 3 and 5 keep the positions indicated, no change takes place, and the loom probably knocks off the next pick through defective picking.

In the Northrop loom a renewal of weft supply may take place either when the weft is completely exhausted, or some little time before it is exhausted. In the former case the action is from the weft fork, and, since no expiring weft requires to be cut, the detector lever 4 has a straight

forwards and backwards movement; but when a change is effected by feeler action, and the weft requires to be cut, then the detector 4 has a lateral motion to and from the selvage, in addition to its movement at right angles to the race, in order that, when moving backwards with the end of the severed thread, the latter will not be withdrawn from the jaws of the detector until it is securely gripped by the holder already referred to. This lateral movement is obtained by lengthening stud 7 to permit of the movement, and by providing detector lever 4 with a further stud 12 which enters the cam groove in the supporting bracket 13, and thus causes detector 4 to move in the desired manner. The head of 4 is equipped with a fixed blade, and also with a moving blade 14 for the purpose of cutting the weft; the moving blade, which has a pendant arm 16, is centred stiffly on pin 15. As the lay moves forward, the pendant arm 16 is pressed back sufficiently to cause the cutting blade 14 to descend and cut the weft which has entered the notch in the head of the detector. The blade 14 remains in this closed position, and retains the weft in its grip, until the detector is again moved forward, when the blade is opened by pin 17 being caused to press on the underside of a plate fixed to the weft holder. This pin 17 also opens the holder as it returns, and presses on the top side of the same plate.

As already stated, the shaft 11 extends along the breast beam to the weft fork end of the lay, which is always at the weaver's left hand, in order that it may bring the change mechanism into action through the movement of the weft fork on the total expiry of weft, or by the weft feeler when the weft is nearly exhausted. The feeler parts are illustrated in plan and side elevation in Fig. 281, and in elevation in Fig. 282. At this end, shaft 11 is furnished

with a vertical arm 18, secured to the head of which is a loosely pivoted finger 19, which extends across the end of

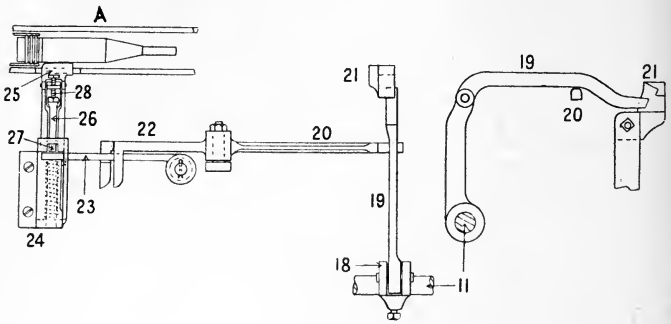

FIG. 281.

the arm 20 of the feeler lever and enters a slot in the specially formed head 21 of the weft fork hammer. Arm 22 of the feeler lever is forked at the end to provide a cam

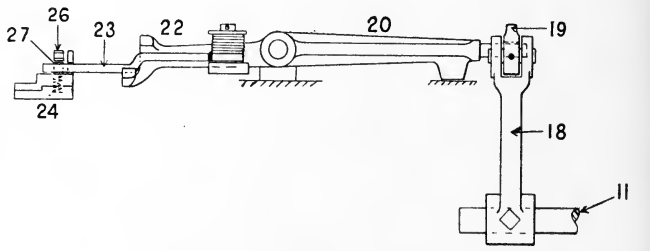

FIG. 282.

groove for the action of the bent depressor rod 23. The free end of rod 23 rests upon the top side of the feeler bracket 24, and, so long as there is sufficient weft in the shuttle, it is kept by spring action hard against the front of the bracket. Under these conditions, the feeler lever

20, 22 remains in the position shown, and finger 19 passes

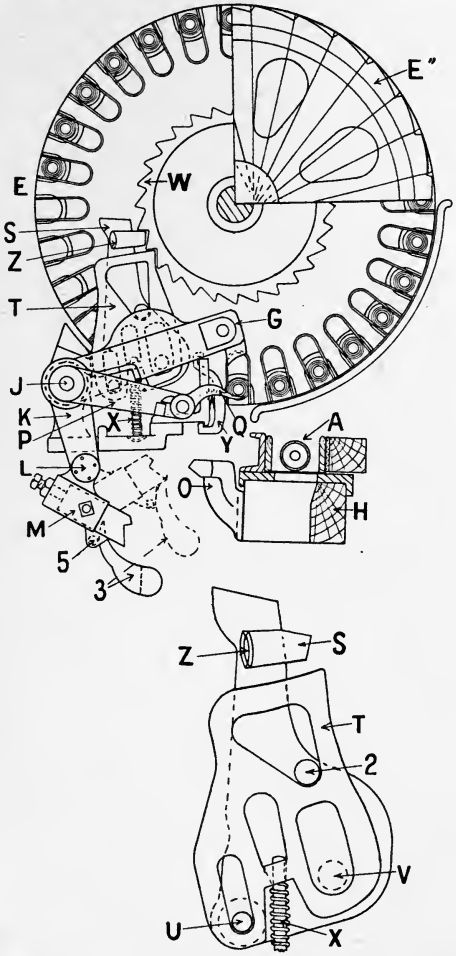

FIG. 283.

freely through the slot in head 21. The head of the weft

feeler 25 enters an opening in the shuttle box front, and a slot in the front of the shuttle itself every pick, but is pushed backwards by the weft on the pirn so long as there is a sufficient supply. Feeler 25 carries near its head a little trip lever 26, the free end of which is supported by a small spring stud 27, so that normally it passes freely over the depressor rod 23, while a short vertical extension of 26 is provided with an adjustable bolt and nut 28. The feeler is naturally pushed back the same distance until the bulk of the weft on the cop or the pirn has been withdrawn, but the further exhaustion of the weft allows the feeler head 25 gradually to enter further into the shuttle A, and the bolt-head 28 to approach more closely to the wood of the shuttle. By proper adjustment, the wood of the shuttle is caused ultimately to strike the head of 28 before the feeler 25 reaches the wood of the pirn, and also before the weft is completely exhausted. When this occurs, the free end of 26 is depressed, and, instead of passing over depressor 23, drives the latter before it, causing feeler lever 22, 20 to tilt and to raise the finger 19 until its extremity is caught in the recess of head 21 as the latter comes forward under the influence of its special cam on the wyper shaft. Shaft 11 is thus partially rotated; shuttle detector 4 moves forwards, and the curved finger 3 permits lever M to rise into the path of the bunter O on the lay. If the action is through the weft fork, the latter may either act directly on shaft 11, in a similar manner to above, or indirectly through a tail piece on arm 18. Where the weft fork method is adopted, it is of course evident that occasionally there may be two picks in one shed in plain cloth, or a broken weave in others. As this would be detrimental to the appearance of some fabrics, it is essential, where perfect cloth is required, to adopt the feeler motion. In order to avoid

thin places when the change is effected from the weft fork, the loom is provided with a let-back motion which allows the take-up wheel to come back 1, 2 or 3 teeth, according as the motion is set. And further, it will be clear that the weft fork motion must not act to set off the loom when a change is required; but, should the change be effected improperly by the shuttle misthreading, and the weft fork act twice in succession, the loom will be stopped.

One of the chief defects of the feeler motion is the varying amount of weft which it may leave on the ejected pirn. Due to slight variations in the strength of the pick, or to other causes, such as an unusual amount of friction in the shed, the relative positions of the rings on the pirn, and the corresponding grooves in the grips of the shuttle, may vary when the shuttle is in the box; consequently, as the pirn is being forced into the shuttle by the hammer, the three rings on the butt end of the pirn may be caught in the three inner or in the three outer of the four grooves in the spring jaws of the shuttle. To be certain in its action, the feeler motion must be adjusted to act before the weft expires when the pirn is held by the three outer grooves, but, should it be held by the three inner grooves when a change takes place, it is clear that the difference in distance or in thickness must be made up of layers of yarn, the number of such layers depending naturally upon the diameter of the weft.

The automatic cop or pirn changer is quite satisfactory for yarns which are wound on pirns, or for such yarns as cotton which are spun in cop form and capable of being forced on some type of spindle or skewer and the head or grips of the latter being of course formed somewhat similarly to that illustrated in Fig. 279. For ordinary cops such as are extensively used in the jute and linen industries,

particularly in the former, the above skewers are unsuitable, and it is questionable whether any arrangement of skewer or pirn head would be considered under present conditions because of the radical change which would be necessary in the winding process. It would therefore seem probable that some mechanism which can insert an ordinary cop, or which can eject a spent shuttle and insert a new one, will be adopted in the above trades if the yarns are otherwise suitable for automatic looms.

Although there are several types of automatic shuttle changing mechanism, that adopted by Messrs. George Hattersley & Sons, Ltd., Keighley, appears to have made most progress, and neglecting their apparatus for use in connection with two shuttles, termed a weft mixer, Figs. 284 to 294 illustrate perhaps the latest development of this type, in which practically all the mechanism is situated immediately under the shuttle box, and may be placed at either end for left hand or right hand looms.

There are two distinct ways of bringing the loom to a stop, (*a*) by means of an ordinary side weft fork or a centre weft fork on the expiry of the weft, and (*b*) by a weft feeler somewhat similar to that illustrated in connection with the Northrop loom. The weft feeler motion would naturally be essential for all but perfectly plain fabrics, and in such cases the ordinary cop could not be used with advantage. For many plain cloths, however, the cop may be allowed to run off, and the loom then brought to a stop at this point, and simultaneously the automatic changing mechanism be placed in action to perform the following functions :—

1. To raise the box front and also the upper part of the box back or rather the slip which keeps the shuttle down as it is leaving the box ; and to place in position the prongs for catching the ejected shuttle.

2. To push the spent shuttle out of the box.
3. To release a full shuttle from the magazine, carry it forward into the shuttle box, and keep the finger and swell out of action.
4. To withdraw the feed lever, lower the box front and the back slip, and allow the ejected shuttle to fall into a conveniently placed receptacle by lowering the prongs.
5. To restart the loom if all parts are in order.
6. To bring the loom to a stop when the magazine is empty, and not restart it unless all is right.

All these functions are performed when the crank is at or about the back centre after the driving mechanism has been withdrawn; and when the loom is in working order it is always stopped at or near this point by means of a brake. Sufficient movement on the part of the magazine, as well as an escapement, is provided so that if any irregular working of the brake should take place, all parts can still move without damage but no actual change of shuttle will take place. It is seldom, however, that anything of this kind happens.

The loom may be driven by means of the ordinary fast and loose pulleys or by any other convenient method. In the drawings illustrated motion is imparted by means of a fast pulley and friction plates—cork insets being introduced into the driving plate. Under such circumstances the pulley A, Figs. 284 and 287, is kept running continuously during working hours, and so is the chain wheel B, the chain C, and the chain wheel D which, through a reduction in the gearing, drives the clutch E enclosed in case E'. When the set-on handle is moved, pulley A, chain wheel B and cork friction plate F are slid along the shaft by means of a fork G; this causes the cork friction plate F to grip the plain

friction plate H, and the loom then starts and runs like any ordinary loom. The presence or absence of weft enables the weft fork, in conjunction with other suitable mechanism, to keep the friction plates in contact or apart. Consequently,

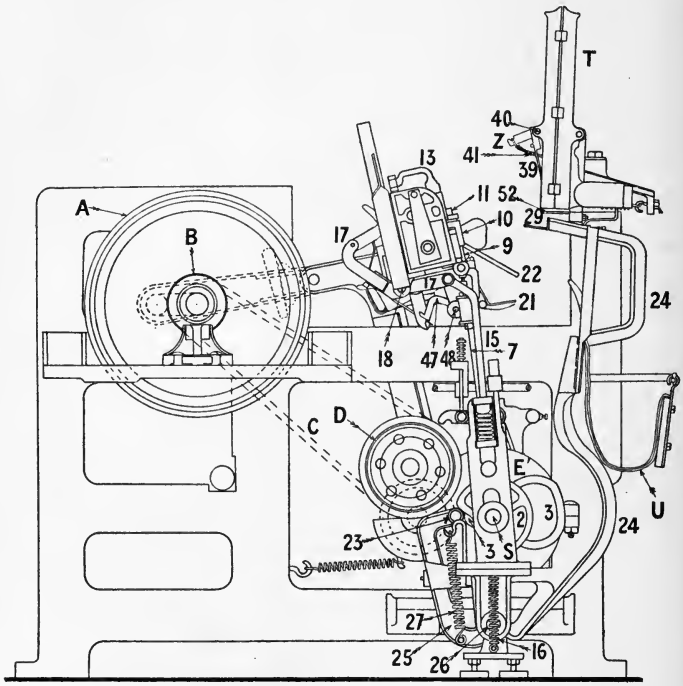

FIG. 284.

when the weft breaks or runs out, the fork G and all compounded parts are withdrawn from the plate H, the brake acts, and the loom is stopped with the crank at the back centre. Simultaneously the end J of clutch lever or trigger K, Fig. 290, is raised, the bottom end L is pulled outwards,

and the pin M in lever O is also forced towards the periphery of the clutch E. Lever O is fulcrumed at P, and

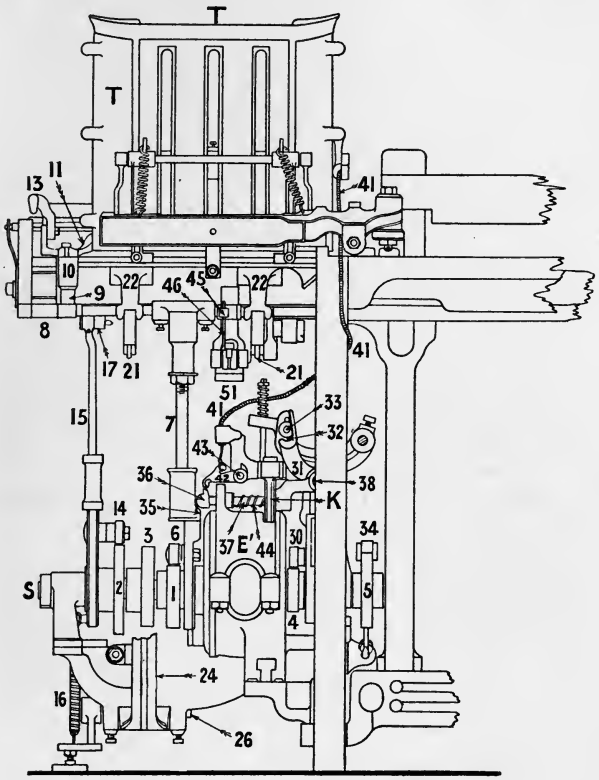

Fig. 285.

the outward movement of pin M is due to the partial rotation of lever O through the pull of spring N. When the lever O moves as indicated, the clutch pin Q enters one of the recesses R, indeed the first which is presented in virtue

of the rotation counter clockwise in Fig. 290 of the clutch E. This is viewed from inside the loom. Immediately

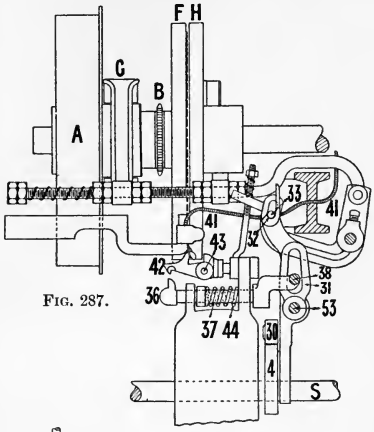

FIG. 287.

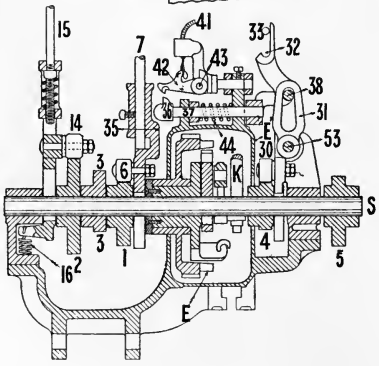

FIG. 286.

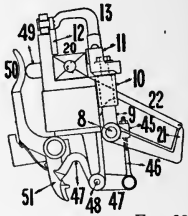

FIG. 288.

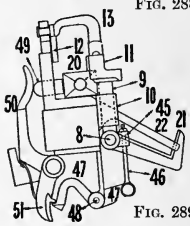

FIG. 289.

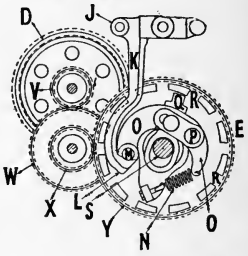

FIG. 290.

pin Q enters one of the recesses R, the main shaft S of the automatic motion commences to rotate. Fixed securely on this shaft, and working in perfect unison with each other, are five tappets, 1, 2, 3, 4, and 5, for operating the different

levers in connection with the various functions. The first tappet to act is No. 1, see Figs. 285, 286 and 291, and this tappet, coming into contact with the anti-friction bowl 6, raises rod 7 and the horizontal rod 8. Near the extremities

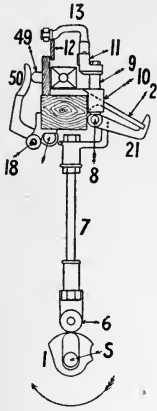

Fig. 291.

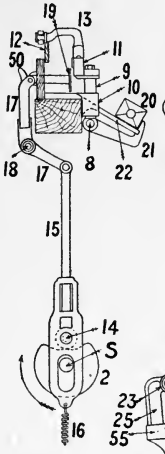

Fig. 292.

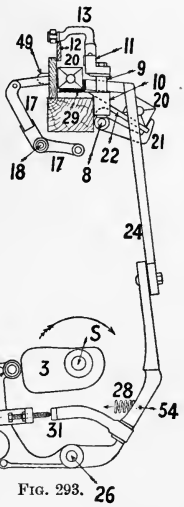

Fig. 293.

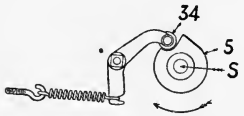

Fig. 294.

of rod 8 are two slide rods 9 which pass through and slide in pillar brackets 10, and are connected to the box front 11. It will thus be seen that when tappet 1 raises rod 7, the box front 11 will also be raised, and at the same time the slip 12 of the box back is also raised by the connection 13.

Meanwhile the clutch E continues to rotate, and immediately the above operations are concluded, the anti-friction bowl 14 will commence to dip into the recess of tappet 2, and the rod 15 will thus be pulled down by spring 16, Figs. 284, 285 and 292. Rod 15 is connected to a double-armed lever 17 fulcrumed at 18. The upper end of lever 17 is provided with a flat plate 19 which, when inoperative, is flush with the box back, but immediately the lever 15 is pulled down by spring 16, the plate 19 is forced sufficiently far into the box to push out the shuttle 20 as indicated in Fig. 292. The descent of the shuttle is made in two stages, so that little or no damage will result. In Fig. 292 it will be seen that the shuttle has been caught by the two projecting prongs 21 and the chute rods 22, and it is kept there until the box front is again lowered. The movement of the prongs as well as their shape differs slightly from that in Fig. 284, although all answer the same purpose.

The tappet 3 commences to act at the same time that the box front commences to rise, and therefore just before the shuttle is ejected. This tappet, through anti-friction bowl 23, operates the feed arm 24 for pushing in the new shuttle, and although the action of the tappet is positive an escapement is provided by means of which the arm 25 may move if arm 24 is locked. The lower end of lever 24 is in the form of a fork and is fulcrumed at 26, while the lower end of arm 25 is also fulcrumed at 26 and between the forked end of arm 24. Spring 27, shown in Fig. 284 but omitted in Fig. 293, keeps bowl 23 in contact with tappet 3, while spring 28 pulls arms 24 to carry the shuttle into the box and also acts as a flexible point or escapement spring. Part only of spring 28 is shown in Fig. 293. One end is fixed to a stud 54 on the arm 24, and the other end is secured to an adjustable hook 55 on the back of arm 25.

The first action of tappet 3 is that of allowing bowl 23 to approach the centre of the shaft S at the thinnest part of the tappet, and this results in the upper part of lever 24 being drawn backwards, and taking the shuttle supports 52 with it, sufficiently far to allow the bottom shuttle in the magazine T to drop into position on the shelf 29 of lever 24, Figs. 284 and 293. The shelf and shuttle are then moved forwards until both enter the shuttle box as shown in Fig. 293, but coincident with this the forks 52 move under the magazine and support the remaining shuttles.

The slip 12 on the box back has already been raised, and thus a free entry for the shuttle is secured. As soon as the shuttle is placed in the box a recess in the tappet 1 allows the box front to drop slightly, either by gravitation or assisted by a light spring, in order to prevent the withdrawal of the shuttle when the shelf 29 is returning. When the shelf is clear of the box and shuttle, the thin part of the tappet allows the box front to return to its lowest position, and in doing so the prongs 21 are also lowered until their tips are below the upper surface of the chutes 22. The spent shuttle is thus relieved and drops into the box or other receptacle U.

After the completion of the above operations, tappet 4, Figs. 285, 286 and 287, acts on anti-friction bowl 30 and raises lever 31 the extreme upper end of which is made in the form of a hook 32; if this hook comes into contact with pin 33 it will lift the latter, and further connections will restart the loom. The main shaft S will now have made one complete revolution, and the anti-friction bowl 34 of tappet 5 then rests in a recess of the tappet as illustrated in Fig. 294 and keeps all parts in their proper position until a further change of shuttle is necessary.

When all the above operations are finished the pin M, Fig. 290, will naturally have returned to the position there indicated, being guided to this position by the curve on the trigger K. In doing so it withdraws the clutch pin Q from the recess R. The automatic apparatus is reduced to a convenient speed for changing by means of wheels V, W, X and Y, Fig. 290, and according to the value of these wheels six or more picks are lost while changing. No reduction in the loom speed, however, need take place.

It will be observed from Fig. 286 that when rod 7 is raised by tappet 1 to lift the box front, the bulged part 35 will come into contact with the head 36 of pin 37, and will cause both to move to the right; this motion in conjunction with pin 38 will carry lever 31, fulcrumed at 53, also to the right, and thus place hook 32 in such a position that when it rises it will miss pin 33. Hence, if lever 7 be prevented from falling, in consequence of a shuttle being trapped under the box front or from any other cause, the loom cannot be started, for the starting depends upon contact between hook 32 and pin 33.

It is also desirable that the loom should be prevented from starting automatically when the magazine T is empty, and this is done in a simple manner. So long as there is a shuttle in the magazine T, the flat spring 39, Fig. 284, is kept out, but, immediately the last shuttle is fed into the shuttle box, the spring comes against the front inner part of the magazine, and thus partly rotates rod 40 counter clockwise. A short lever Z on this rod is connected by a flexible enclosed wire 41 to a hook on the upper part of catch 42 fulcrumed at 43, and when the lever Z is released the wire 41 allows the catch 42 to drop, and places the hooked end in front of the corresponding hook on the head 36 of pin 37, and thus prevents the spring 44 from forcing the pin to

the left, although rod 7 may be down. It thus keeps lever 31 to the right, and prevents the hook 32 from starting the loom; although the loom is prevented from being started by the automatic mechanism in this way, it can be started by means of the set-on handle, and the weaver can replenish the hopper with the loom in motion.

It will be evident that when a new shuttle is being introduced into the box, it is essential that the swell should not be acted upon by the stop rod finger, otherwise the swell would prevent the shuttle from being entered properly, and the box front could not be lowered. Provision is made for withdrawing the stop rod finger 50, Figs. 288 and 289, when a change is being made. A collar 45 is fixed on and near the middle of the horizontal rod 8, and from this collar a short connecting rod 46 is attached to the sneck-up lever 47 fulcrumed at 48, so that when the box front 11 and rod 8 are lifted, the short rod 46 is also raised, and the hooked end of sneck-up lever 47 is lowered. When the shuttle to be ejected is in the box, the swell 49 and stop rod finger 50 will be out, and the companion part 51 of sneck-up motion will be in the position shown in Fig. 288: consequently, when the box front is raised, the hooked end of the sneck-up lever 47 will pass behind the catch of lever 51, and will thus keep the stop rod finger out of action. Should the shuttle fail to reach the box properly, the swell would naturally be in the box as shown in Fig. 289, and the finger 50, being full forward, would take the catch of lever 51 to the left of sneck-up lever 47, so that although the box front is raised, and the new shuttle placed in the box, the return of the box front to its lowest position is prevented because the hooked part of lever 47 is snecked up by the corresponding hook of lever 51. It will therefore be seen that the bulge 35 of rod 7, Figs. 285 and 286, will

keep pin 37 to the right and prevent communication between hook 32 and pin 33. It will be understood that after each shuttle is placed in the magazine, the end of the weft is slipped into a simple grip, and after a few shots have been inserted this thread is severed near the selvage by a simple apparatus fixed to the breast beam.

Warp stop motions.—The commercial value of an automatic weft supply mechanism is considerably raised when it is accompanied by an efficient warp stop motion; indeed, in the case of warps which break frequently, it is difficult to imagine any degree of success unless the two motions work in conjunction. Warp stop motions may be of general application, and operated independently of the shedding apparatus, or they may be specially adapted for working in conjunction with the leaves of the camb. Most warp stop motions are of the former type, and, in general, they consist of a series of thin steel pieces, termed drops, which are supported clear of some negatively driven moving part by the warp threads so long as the latter remain intact, but which, when a warp thread breaks, drop into the path of such moving part and arrest it. When arrested, this part actuates, or causes to actuate, other parts which set off the loom. The drops may be formed in many different ways, and the moving parts may be arranged differently, but most motions have the same fundamental principles. Other warp stop motions are used in which a comb of spring wires is used—one wire to each contiguous pair of warp threads. These wires project upwards between the lease rods, and each wire is drawn forward by the crossing of a pair of warp threads behind it, but should one of these threads break, the corresponding wire is released and springs back against a copper bar in the rear lease rod. The electrical contact between the

copper rod and the wire, together with further electro-mechanical mechanism, brings the loom to a stop.

Drop wires or steels are of two general kinds: 1st, those which may be dropped on the warp threads, and 2nd, those in which the warp must be drawn. At first sight, the former seems the preferable type, but they are objection-

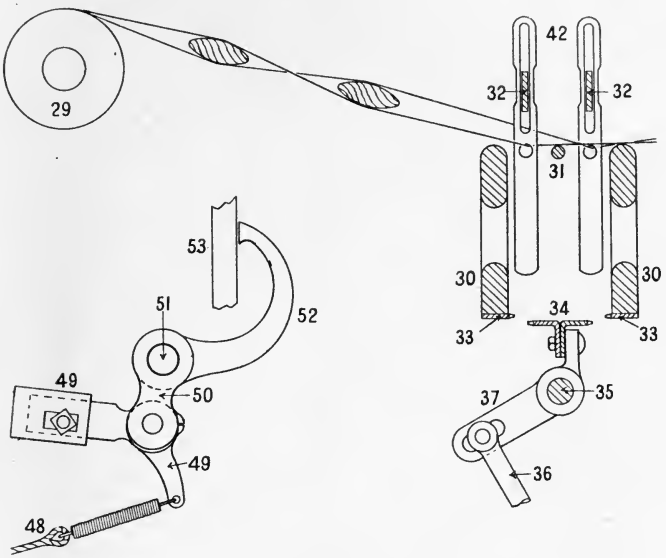

Fig. 295.

able in that they may be readily removed by an unscrupulous weaver should the warp be giving trouble.

The most recent type of warp stop motion issued by The British Northrop Loom Co., Ltd., is illustrated in sectional elevation in Fig. 295, in part plan elevation and in detailed elevation in Fig. 296. About seven inches in front of the back rest 29, two open-sided cast iron plates 30 are secured by suitable fixings to the loom frames, and

between them a light rod 31 is supported. Plates and rod together form two divisions in which the drops 42 are suspended on the warp threads in two lines. These drops consist of very thin pieces of bronzed steel, are about 5 ins. long by $\frac{7}{16}$ in. broad, and are threaded on two bars 32 which keep the drops vertical, prevent their ready removal, and also support them when a thread breaks. Each drop is provided with a hole about $\frac{1}{4}$ inch in diameter for the warp thread, and is reduced in width near the top so that

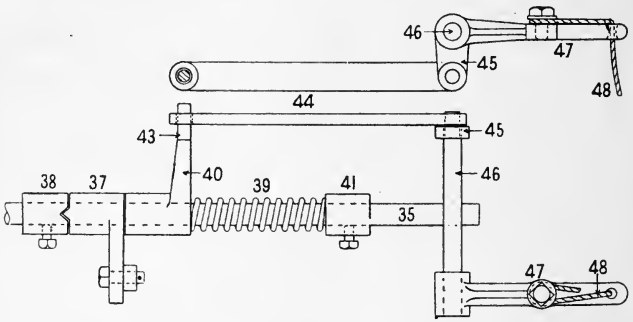

FIG. 296.

a warp breakage may be readily detected by drawing the fingers in the groove formed along the side of the drops at this point. Each side plate 30 has a finely serrated or saw-toothed bar 33 secured to it on the underside; and a similar saw-toothed but double edged plate 34 is fixed to a series of arms secured to rocking shaft 35. This shaft is driven from the wyper shaft by an eccentric not shown, a connecting rod 36 and lever 37 which, however, is loose on the shaft. From the lower view in Fig. 296, it will be seen that lever 37 is furnished with a >-shaped projection which enters a corresponding recess in collar 38, and the

latter is secured by set-screw to shaft 35, while both are kept in working contact by the pressure of strong spring 39 acting on loose piece 40 and collar 41. Provided no warp thread breaks, serrated plate 34 oscillates freely from side to side, but should a thread break and a drop 42 interpose between plate 34 and one or other of the fixed plates 33, plate 34, collar 38 and shaft 35 are arrested in their movement. But, since the wyper shaft and the eccentric continue to rotate, lever 37 oscillates, and is caused by its >-shaped projection to move to the right and to carry with it the loose piece 40 endwise on shaft 35. A projection 43 extends laterally from 40 and enters one end of a connecting bar 44, the other end of which is secured to short lever 45 on shaft 46. To the other end of shaft 46 a further lever 47 is secured, and from this a wire cable 48 is carried through a stiff tube, after the fashion of a well-known cycle brake, to the lever 49. As 40 moves endwise on shaft 35, it is clear that levers 45 and 47 will be tilted, and that the heavy arm of lever 49 will be raised. Since it is raised in front of the advancing lay, arm 50, on which it is centred and which in turn is fulcrumed on stud 51, will be driven backwards, and its curved arm 52 forwards, while the set-on handle 53 will be pushed out of its retaining catch, and thus stop the loom.

CHAPTER XXI

CENTRE AND SIDE SELVAGES

In the manufacture of several kinds of jute and linen fabrics it is customary to weave two or more widths of narrow

cloth in the loom at one time. This, however, is advisable in only those cases where the quality or firmness of the selvage of the cloth is a matter of secondary importance—as, for example, in jute cloths intended for paddings, for some classes of bags, and for cutting-up purposes generally; also in fringed linen doyleys and other similar domestic cloths. In the latter cases the cloths are usually fringed all round, the fringe made by the warp being obtained by drawing forward (sometimes automatically) the required length without the intersection of the weft, while the use of catch bands or narrow strips of warp threads at an equal distance from each selvage permits of a similar fringe of weft threads. In addition to this, however, it is necessary to leave sufficient space empty in the reed between each pair of cloths to form the weft fringe at these places; while in the former, or jute case, a cutting division between the cloths is all that is required. The omission of, say, two or three splits of the reed is in general quite sufficient for this purpose. In both cases, however, some provision should be made at each edge of each width, which will prevent the warp threads at these points working loose. Such provision is termed the centre selvage or patent selvage.

In general this selvage consists of three twist cotton threads A, B, and C, Fig. 297. A and B form plain cloth throughout, while a third or twisting cotton thread C binds the whole firmly together. This thread C crosses underneath A and B, but rises above the weft every pick, first at one side and then at the other. When up at the left of A, that thread itself is under the weft; similarly, when C is up at the right of B, the latter is under the weft. To permit of this twisting action, it is clear that all three threads must pass through the same split of the reed—

the last or first, as the case may be, in the width of the cloth. In all leaf work the threads A and B are drawn upon the usual two plain leaves, Fig. 297, whilst the thread C is first drawn through an ordinary mail or heddle on leaf No. 2, then passed underneath threads A and B in front of leaf No. 1, and finally drawn through a special or fly heddle attached to the latter leaf. Threads A and B are taken from the loom beam in the usual manner, but each thread C invariably comes from an independent bobbin attached in some convenient position to the loom and paced by light weights or other suitable means. This thread C is in some cases taken under the crankshaft and then direct to the heddles without being passed over the lease rods.

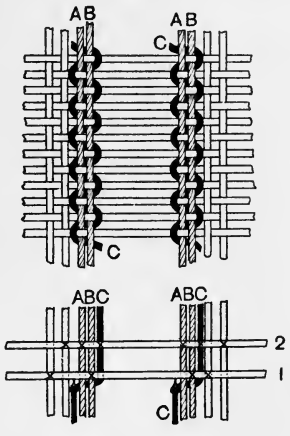

FIG. 297.

The usual method of mounting the fly heddle D is indicated in Figs. 298 and 299, which show the two positions of a shed formed when this particular arrangement is used for the centre selvage. Attached to the front of No. 1 leaf is a piece of heddle twine of sufficient length to reach nearly half-way down the shed when the latter is full open, with leaf No. 1 up. In this position (Fig. 298) the twisting thread C is crossed underneath threads A and B, and is lifted to the left of the latter by the fly heddle D. In Fig. 299 the thread C is lifted to the right of A and B by the action of leaf No. 2, the fly heddle permitting this to be done by doubling up under the threads A and B. It will be observed that in each case practically only half-a-

shed is given to the thread C. This constitutes an objection to this method of mounting the fly heddle, more particularly if the false selvage happens to be weaving near the selvage proper of the cloth, as the reduced opening presented to the shuttle may necessitate a slightly heavier pick than if a full open shed were available. This objection is increased

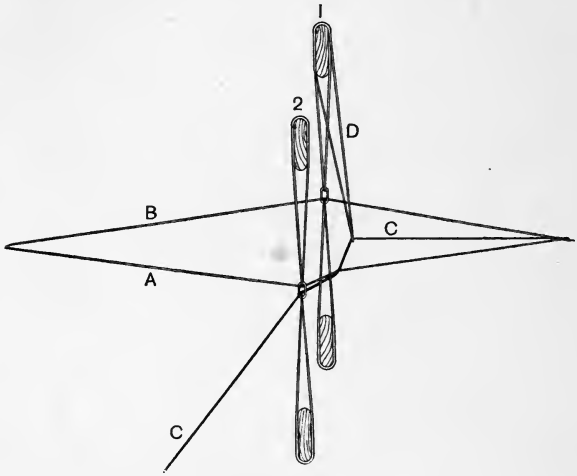

FIG. 298.

by the fact that the thread C in the one case, and the fly heddle in the other, has each a tendency to lift threads A and B off the raceboard when the shed is formed, and thus produce a more imperfect opening. A further objection is the fact that when leaf No. 1 begins to fall from the top position the fly heddle D immediately slackens, and sometimes mixes with the adjacent warp threads, causing faulty shedding. Notwithstanding these defects, this method is in constant use in numerous cases, and we believe is the one most generally adopted.

Another, and possibly better, way of attaching the fly heddle is illustrated in Figs. 300 and 301. By this method an approximately full shed is obtained each time; the lifting of the bottom portion takes place only slightly on alternate picks, and further, the fly heddle is never slack or in a position to mix with the adjacent warp yarn. The

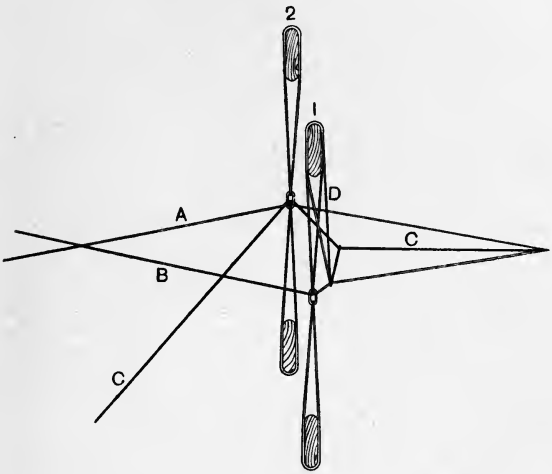

FIG. 299.

fly heddle D is passed through a double mail or heddle on the front leaf in the manner shown, and is then attached to an elastic band or other light spring E, which is fixed underneath to some rigid portion of the loom or to the floor. The spring E should be adjusted just in tension when the leaves are level. In Fig. 300 it will be observed that when the twisting thread C is raised by leaf No. 2 to the right of the threads A and B, the fly or doup heddle D simply slips up through the double eye of the special heddle

on leaf No. 1, and does not affect the position of thread B in the slightest. In Fig. 301, which shows the crossed shed, the thread C is raised to the level of A and B by the special heddle on leaf No. 1 drawing up the doup heddle D and thread C with it. In this shed, the thread A is raised slightly from the raceboard. By passing the thread C

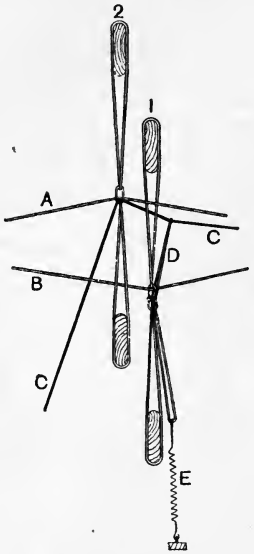

FIG. 300.

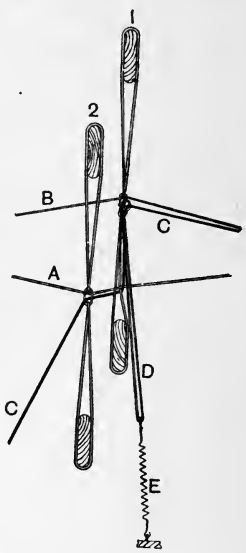

FIG. 301.

under the crankshaft as indicated, instead of over the lease rods, any tendency to increase the strain upon that thread when forming the crossed shed is greatly minimised. In weaving these selvages the proper pacing of the bobbin from which the thread C is drawn is a most important feature; indeed, the production of a perfect selvage, as well as the ensuring of a minimum of trouble to the weaver, depends almost entirely on this adjustment.

Some centre selvages are composed of only two threads instead of three, and for certain classes of light fabrics are considered quite satisfactory. Of these two threads forming the selvage, one is always stationary at the bottom line of the shed, and is therefore always under the weft. The other or twisting thread is always over the weft, alternately at the right and at the left of the stationary thread, crossing from side to side under the latter, and therefore binding warp and weft together. In this case the stationary thread is drawn through a special mail fixed in the low position, while the twisting thread can be worked from two plain leaves by passing it through a small ring which is attached to both leaves by heddle twine passing underneath the stationary thread. In the case of single-lift harness work, two hooks working plain are employed in place of the leaves.

Side Selvages.—In the majority of jute and linen fabrics the selvage may be said to make or mar the cloth, and where such is the case it is of great importance that a good selvage be woven. Several practical difficulties are from time to time encountered in the weaving of these—*e.g.*, inferior and insufficient cotton, yarn of the wrong size, faulty beams and pacing, badly-adjusted shedding, irregular picking, bad cops or pirns, and irregular tensioning of the weft; in every case, however, the weave employed is the prime factor in the production of a good selvage. Where possible, this should be plain, as a plain weave undoubtedly forms the strongest and best selvage obtainable, although in many instances in elementary leaf work it is not considered necessary to adopt special means to obtain any other selvage than that given by the weave itself. It may be noted, however, that with the 4-leaf serge or common twill $\frac{2}{2}$ a perfectly satisfactory selvage is obtained if the

two first and two last threads of the warp be so drawn in the camb that they cross on the weft previous to picking from the left and right shuttle boxes respectively. In the case of the 4-leaf twill $\frac{3}{1}$ it is possible to work a perfectly plain selvage by drawing odd threads between the heddle bands of the first and third leaves under the heddle eye (not through it), and the even threads between the heddle bands of the second and fourth leaves, also under the eye. By doing this the odd threads will be depressed on the first and third picks by leaves one and three respectively, and the even threads will be depressed on the second and fourth picks by leaves two and four respectively. To complete the weave, however, it is necessary to connect these threads in some manner to an elastic band or other light spring overhead in order that they shall be raised when the downward pressure of the leaves is removed. Should the twill be working $\frac{1}{3}$, these selvage threads must be drawn through the heddle bands over the eye instead of under it, and the spring must be connected underneath instead of over the leaves. This method of forming a plain selvage might be said to be applicable generally to any number of leaves where the weave—twill, satin, or otherwise—is of a similar character, such as $\frac{2}{1}$, $\frac{3}{1}$, $\frac{4}{1}$, $\frac{5}{1}$, and so on, only in cases where the total number of leaves is an odd number the selvage formed is only partially correct.

In some leaf work it is not possible to arrange the selvage threads on the leaves in such a manner as to produce a plain or approximately plain selvage. It therefore becomes necessary in such cases to adopt some independent means of weaving it, and the most general method consists of placing two skeleton leaves, carrying the selvage threads only, behind, and in some few cases in front of, those employed for the pattern, and actuating them either

by a plain wyper on the low shaft, by two spare needles in the dobby, or, as is sometimes the case, by two special needles provided for that purpose, and actuated by the card or lag cylinder independently of the pattern cards or lags. Sometimes an arrangement is found which consists of a single-bladed wyper acting to raise or depress a treadle attached to one of the skeleton leaves, these latter being connected together by an ordinary top roller, and returned in the opposite direction by a spring connected to the second leaf.

Jute and linen fabrics are sometimes woven apparently plain, but with two shots of weft inserted in one shed. These can be most conveniently woven by a 4-leaf serge twill $\frac{2}{2}$ tappet. Two of the leaves working opposite to each other, say Nos. 1 and 2, carry the whole of the warp forming the cloth, also the selvage threads at one side; while the other two leaves, Nos. 3 and 4, carry the other selvage threads only. Some canvas cloths have the appearance of having been woven in this way, whereas only two plain leaves have been used in their production. In these instances the cop or pirn has been wound with two threads running on at the same time from two separate bobbins, or else with two cops in the same shuttle when the ends emerge from the centre of the shuttle. Generally, however, where two or more picks of weft have to be inserted in the same shed, and where the selvage is of secondary importance, it is the practice to employ a catch band or thread, which will simply prevent the weft returning with the shuttle through the open shed. This band is made to rise and fall on alternate picks, and may be actuated in different ways, most of the methods indicated for weaving a proper plain selvage being available. Some special methods of actuating this thread are adopted, but only one

will be indicated. The cord from which the mail carrying this catch band is suspended is passed over suitable guide pulleys and attached to one end of a strap, the other end of which is so fixed that the strap is interposed in the path of the picking arm as the latter travels inwards. The arm thus acts on the strap, cord, and mail, and causes the catch thread to be raised above the shuttle as the latter leaves the box, while a lingoe or other negative device keeps the thread under the shuttle as the latter returns.

Various complicated and expensive devices have from time to time been patented for working centre and side selvages, but none has been anything like generally adopted in the jute and linen weaving industries. Where the shedding mechanism is a jacquard machine, the most simple and satisfactory method of forming selvages, and often other simple weaves near the selvages, is by having an extra six or eight hooks in the machine actuated by special needles direct from the card cylinder. Between the end of the card and the iron head on the cylinder end sufficient space is usually available for drilling an extra row of holes to control these needles. By suitably plugging up the holes not required, any weave repeating on a revolution of the cylinder (usually 4 picks) may be obtained. In damask weaving a plain selvage is thus formed, being twice repeated on the cylinder. Inside the selvage a portion of the cloth is often diced—that is, two or three threads together are lifted for two picks and left down for the next two—a kind of hopsack or basket weave. This is also worked from the same set of extra hooks; while in other cases one finds the $\frac{2}{2}$, $\frac{3}{1}$, or $\frac{1}{3}$ twill obtained from the same source.

In pick-and-pick weaving, where two shots require to be driven in succession from one side, an ordinary plain selvage

is not suitable. In this case the best effect obtains when the selvage threads rise and fall for two picks in succession. This can also be easily arranged on the extra row of hooks, which, besides being convenient, in this manner relieve the designer and the card cutter to some slight extent, as without this provision all selvages, etc., require to be painted on the design and cut upon the corresponding cards. Moreover, a set of cards which is punched for a certain selvage can produce only that particular selvage, whereas by adopting the method indicated above, any selvage capable of being produced on the lines mentioned can be woven with any set of cards.

CHAPTER XXII

CONCLUSION

In concluding this work on the mechanical side of jute and linen weaving, we have purposely omitted to particularise several special machines employed in the above industries—*e.g.*, Brussels carpet looms, Kidder or Scotch carpet jacquard, special looms for the weaving of cotton bagging, etc.; we have also withheld the description and illustrations of the special devices used in the production of many special yet simple fabrics. Our reason for these omissions is that such mechanism is not of sufficient general interest to merit its introduction into a treatise on weaving written specially to impart general knowledge.

Gauze weaving has also been passed over on account of its more general application to fabrics composed of cotton,

worsted and silk. Centre shedding and open shedding jacquards have not been included because of the infrequent adoption of the former and the doubtful utility of the latter in the jute and linen industries. Design and calculations have already been treated in separate volumes under these heads.

Our reference in the first edition to the question of jacquard pitches needs little modification. How the standard British pitch of 0·269″ was evolved is difficult to answer, but there is no doubt that finer pitched machines are, to a limited extent, being more widely adopted, although the reasons against their ultimate displacing of the ordinary machine are still the same. These are, first, the extensive distribution of expensive plant suitable for the present pitch and size of card; second, the reduction of latitude of movement in connection with the new pitches is, in many cases, so great that very accurate adjustment of parts is necessary, and no allowance is possible for ordinary wear and tear; third, the wire is so much reduced in thickness that the life of the machine is materially shortened; fourth, the want of uniformity in the new pitches adopted, although these latter have been almost reduced to two, viz., a continental straight pitch of 4 mm., and the Verdol fine zig-zag pitch of 3 mm., as compared with the standard British pitch of $\frac{7}{26}$ of an inch.

Speeds.—Another point to which slight reference has already been made (see p. 124) is the speed of looms of different types and widths. Widely different opinions are held as to the benefits of high speeds, but it might be affirmed generally that as the speed is increased beyond certain limits it becomes proportionately, and in some cases actually, less productive; besides resulting in many cases in the production of inferior cloth. A speed of 160 to 165

picks per minute for a loom of 36 in. reed space is found to be very satisfactory for the great majority of jute and linen fabrics which are of a light or medium character. A similar speed is also found to give satisfactory results in damask looms where the shedding mechanism is a double lift jacquard or double lift dobby; but for heavy fabrics, and for narrow looms which actuate single lift jacquards or dobbies, a reduction of about 20 per cent in the above speeds is advisable. A less percentage reduction is required in wide looms, because since such looms run slower there is more time for the shedding changes to take place.

It is not usual to adhere to any fixed rule when determining the speeds of wide looms as compared with the speed of narrow ones of the same type and for weaving similar fabrics. A moderately safe proceeding, however, in such circumstances is to vary the speed in inverse proportion to the square root of the reed space. Thus, given that 160 picks per minute is found to be a satisfactory speed for a 36 in. reed space loom, and it is required to find a suitable speed for a similar but 81 in. reed space loom; then $\sqrt{81} : \sqrt{36} = 160 : x$, whence $x =$ approximately 107 picks per minute. An approximation to this, applicable only and obviously within limits, say up to 80″ reed space, is to subtract the reed space from a constant number, 196 for jute and linen, to obtain the speed.

To determine the actual speed of any loom by calculation is a simple matter. The necessary data are :—

1. The speed of driving shaft (say 150 revolutions per minute).
2. The diameter of the drum on driving shaft (say 16 ins.).
3. The diameter of pulleys on crankshaft of loom (say 15 ins.).

$$\frac{\text{Revolutions per minute} \times \text{diameter of drum}}{\text{Diameter of pulley}} = \text{the revolutions}$$

of the crankshaft, or the picks per minute; *i.e.*

$$\frac{150 \times 16}{15} = 160 \text{ picks per minute.}$$

From this number it would probably be necessary to deduct from 3 to 4 per cent to allow for the slipping of the belt; to obtain the effective or productive picks per minute a further 25 per cent at least must be deducted; *e.g.*,

$$\frac{160 \text{ picks} \times \{100 - (4 + 26)\}}{100} = 112 \text{ effective picks per min.}$$

Nothing has been said about the actual driving of the looms because, with the exception of driving each line shaft or a group of shafts by a motor, the method of driving has remained the same for years. Most looms have been and are still placed in and out of action by fast and loose pulleys, although there is a considerable number in use which are operated by friction cones and plates. In all cases, and particularly where the power required at various points of the cycle, or one revolution of the crankshaft, varies considerably, it is desirable that a constant speed should be maintained, and apart from the question of expense which we do not propose to discuss, we are of opinion that the greatest regularity of speed and probably the highest actual speed is obtained by means of individual driving. Thousands of looms are now driven by separate motors, and the number is increasing every year.

There are three methods of arranging the drive from a motor, (1) by belt, (2) by gear wheels and clutch, and (3) by friction and belt combined. In the third case the current is on all the time, and the motor and belt pulley run continuously during working hours; the friction plate is

brought into contact with its companion in the usual way to start the loom. Methods 1 and 2 as applied to jute looms are illustrated in Figs. 302 to 305, and represent installations by Messrs. Siemens Brothers Dynamo Works Limited. In Fig. 302 the motor A is situated at the back of the crankshaft B, but it may be placed in front if desired. The three-phase current motor A of say $\frac{1}{2}$ to $\frac{3}{4}$ B.H.P. runs at 900 to 950 revolutions per minute, and the necessary reduction in speed is obtained by a proper ratio between

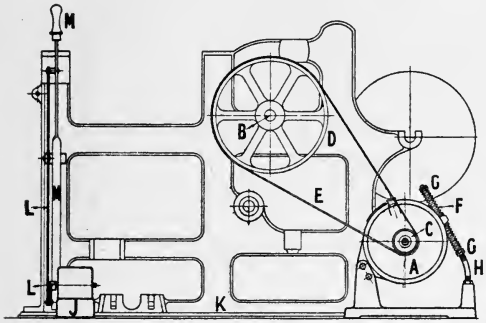

FIG. 302.

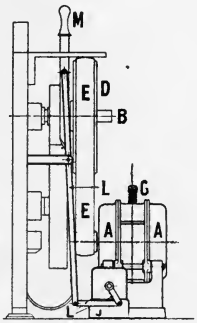

FIG. 303.

pulleys C and D round which is passed a good belt E—preferably a laminated one. Spring F keeps the motor down and the belt tight, but it will yield a little if desired. Limits of adjustment are provided in nuts G and rod H for any stretch in the belt. The wires from the mains pass to the switch box J through pipe K to the motor A, and the switch is placed in and out of action by a suitable arrangement of levers L to the set-on handle M. The heavy lines in the illustrations indicate the parts which belong to the drive proper.

The gear driven loom is shown in Figs. 304 and 305.

The motor A, driven in the same manner and at the same speed as the one just described, communicates its motion to the main shaft B through pinion N to large wheel O which is coupled to the crankshaft B by a friction brake. The brake slips when the loom knocks off, but is powerful

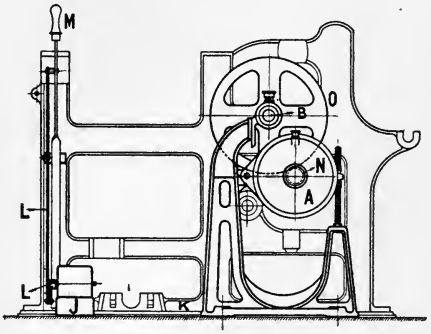

FIG. 304.

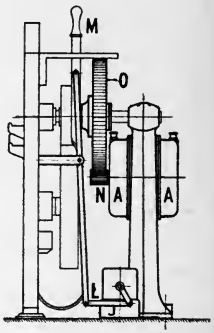

FIG. 305.

enough to drive the loom when all is working properly, and the grip of the brake may be strengthened or weakened at will according to requirements. Apart from the pinion, wheel and brake, the arrangement is very similar to that illustrated in Figs. 302 and 303, and the essential parts are again shown up in heavy lines.

INDEX

Action of catch or sneck and spring hammer on cylinder, 212
Angle between race and reed, 386, 387
Arm, connecting, effect of shortening, 383
Arms, short connecting, 371
Automatic looms and weft supply, 543
  detector, 547
  feeler motions, 549, 554
  hammer, 545
  Hattersley, 554
  hopper, 545
  Northrop, 548
  restarting, 562, 563
  sneck-up motion, 564
  stopping, 554
  swell, 564
  warp stop motions, 565, 566
  weft cutter, 549
  weft mixer, 554

Back beam or rail, vibrating, 399
Back and front rails, effect of position of, on quality of cloth, 149
Bank or bobbin creel, 46, 52
Beaming and beaming machine, 42, 65
Beating up, 355
  time of, 115
  character of movement of, 372
  on a crossed shed, 151
  real function of lay in regard to, 372
  double beat for Brussels and Wilton carpets, hose-pipes, etc., 388
Bobbin winder, description of warp, 20, 23
  barrel shape, 19
  parallel drum, 22
Bout of warping mill, 46
Box motions, 430
  Anderston Foundry's eccentric, 462
  Diggle's, 430, 437
  Eccles, 467
  Hacking's original eccentric, 446
  Hacking's new eccentric, card and box, 455
  Hall and Sons' eccentric, 438
  Hollingworth and Knowles, 4-box, semi-positive, 475
  4-box, positive, 480
  6-box, semi-positive, 481
  Parker's, 432
  Smith's eccentric, 447
  advantages of positive movement in, 474
  diagrammatic position of eccentrics in, 447
  effect of cards in ordinary eccentric, 455
  four positions of levers (Hollingworth and Knowles'), 478
  methods of compounding and enclosing eccentrics in, 445
  methods of disconnecting eccentrics and levers in, 445, 454, 467
  nature of movement of boxes in eccentric, 475
  reversing cylinder movement in (Eccles), 472
  in (Halls), 441

Whitesmith's principle, 438
revolving, 482
skip-box, 487
Brake, 504
defect of, and doubtful utility of, 505
Brittle yarn, 70
Brushing arrangement in dressing machine, 100
Brussels carpet looms, 577
Buffers, 514, 515, 516

Card cylinder, adjustment of jacquard, 213, 223
reversing of, 167, 175, 213
reversing motion for, 298
Card frames or cradles, 261
Card lacing for double-cylinder jacquard, 230, 241
Cards, action of dobby, 171
border and centre or repeat, 264
full set of, for cross-border work, 263
working backwards, 256, 262, 264
Casting out or fileying the camb with calculations, 112
Catch band or selvage thread, 167
Catch bands, 575
methods of actuating, 576
Chain beaming, 42, 65
warping, 42
Change, time occupied by, 126
Check-strap for box looms, 517
travel of, 517
effects of faulty adjustment, 517
Check-straps, 514, 516, 517
Clasp rods, 108
Comberboard and sett of cloth, relation between, 307
position of, 309
Comberboards, 306
Common harness, 265
Cone stud, acceleration of, 329, 335
adjustable, 322
chord of arc travelled by, 334
Connecting arms, lengths of, 364
Connecting pin, average velocity of, for arms of finite and infinite lengths, 370
and lay, calculation for travel of, 366
eccentricity of velocity of, 369
table of velocities, 370
variation of eccentricity of, 369
Cop machine, description of, 36
angle of cone, 39
Cops, alteration of diameter of, 40
dimensions of, 36
Cover, definition, etc., 120, 122, 125, 148, 151, 271, 273
Crank, loom, and jacquard crank, relative positions of, 378
direction of movement of, 362
Cranks and arms, effect of altering the lengths of, 370
Crankshaft, alteration of position of, 379, 382, 383
direction of motion of, 114
fixing position of, 361, 363, 379
Cross-border jacquards, 241
Davenport and Crossley's, 242, 244
Flather's, 247
Hutchison's, 249
new form of upright, 252
both cylinders on same side, 254
Cross-border dobby, 197
Crown reed, 107
Cylinders, timing of, 232
driving of double, 223
working backwards, 167

Decked nails, 268
Defective shed where no heck is used, 239
Design, 578
Detector, 547
Disc for twilling jacquard, calculation for, 291
Dobbies, size of, 164
Dobby, cross-border, 197
double-decked, 174
double-lift, open-shed, negative, 175
hand loom, bottom-shedding, 164
Hollingworth and Knowles', 186
details of cylinders, 197
driving of chain cylinder, 196
driving from low shaft, 191
high velocity of driving shaft, 194
levelling apparatus, 190, 191

lock knife, 190
method of driving, 191
open shed, 190
setting of shedding and picking cylinders, 197
open shed, double-lift, positive, 181
positive centre shedding, 169
shedding, 163
Double beat, arrangement of, 389
Double-lift jacquard, advantages of, 222
Double swan-neck, 252
Double-throw crank, 218, 220
Draft, methods of indicating, 109
Drawing-in, 109
Dressing and beaming, 42, 70
Dressing machine for jute, 81
cylinder details, 91
driving of, 87
driving of loom beam, 85
measuring and marking motion, 87
for linen, 98
Dressing materials and proportions, 70
reasons for, 70
speed of yarn during, 83
Driving of dressing machine, 101
looms, 580
Duck-bill reversing motion, 226
Dwell, 116, 122, 124
beginning and end of, 116, 124
time occupied by, 124
for wide looms, 122

Eccentricity of lay, modification of, 383
Electrical individual drive for looms, 537, 580
switch for looms, 537
Evener, expanding, 67, 68
Eveners, raddles or wraiths, 65

Feeler motion, 549, 554
Fileying or casting-out, 112
a twilling jacquard, 293
harness reeds, 308
Fly heddle mounting, 569
another method, 571
disadvantages of, 569, 570
Flying shuttles, 361, 527
causes of, 527
Fringes in the cloth, 540, 541
Frog, 495, 496, 497, 503
Full harness, 266

Gauze weaving, 577
Glass for counting sett of cloth, 8
Griffes for double-lift jacquard, 218
driving of, 220, 224
travel of, 314

Hammer, 545
Harness cords, atmospheric effect upon and adjustment of, 240
building or mounting, 302, 309
knots, 312
reed, filling of, 309
marking of, 309
reeds, 305, 307
building of, to sett or scale, 308
ties, "Norwich" and "London," 303
twine, 311
Harnesses, 309
Hattersley's automatic loom, 554
Heater, 503, 541
Heck, calculation for fall of, in warping, 45
disadvantages of a jacquard, 240
for jacquard, 237
or guide reed in warping, 44
Hook reed, 103
Hopper, 545

Independent cylinder motion, 215, 222
drive, benefit of, 223
Individual motor drive for looms, 580
belt driven, 581
gear driven, 581

Jacquard, continental type of, 215
defects of double-lift, 232
single cylinder, 230
driving arrangements for double-lift, single cylinder, 220
fine pitch, 217, 257
front view, 600's single-lift, 238
machines, pitch of, 257

main disadvantage of double-lift, double-cylinder, 234
Scotch or Kidder carpet, 577
shedding, 204
size or denomination of, 205
type of shed in double-lift, 218
single-lift, 218
various types of hooks and needles, 209
Verdol, 256
400's double-lift, single cylinder, 218
400's double-lift, double cylinder, 230
400's single-lift, 206, 207, 214
600's single-lift, Scotch, 210
Jacquards, centre-shed, 578
driving of double-lift, 315
single-lift, 314
height of, 304
open-shed, 578
supports for, 222, 304, 305
time of shedding in, 315
Jute, linen and cotton yarns, methods of counting, 2
Jute weaving, development of, 1

Keighley dobby, 175
knives arranged to occupy two positions, 252, 281
open shed, Ward Bros., 175
positive, Hattersley and Sons, 181
Knock off motion, 492, 498
Knots, clove hitch, weaver's and reef, 312

Lag cylinder, positive drive for, 184
Lags, method of pegging, 179
Lay, 356
eccentricity of, 364
in back position, protracted movement of, 388
modification of eccentricity of, 383
rigidity of, 376
velocity of, when near the cloth, 375
Lay and connecting pin, calculations for, 366
table of velocities of, 370
Lay swords, dip of, 361, 372, 386
ears on, 371
Lease, 48, 54
Lease rods, effect of position of, on quality of cloth, 148
Leasing apparatus, 50, 52
heald, 103
reeds, 53, 101, 103
Leaves, level position of, 115, 125, 151
irregular movement imparted to, 126, 134
Lengths of swords, connecting arms and cranks, 115
Let-off motion, automatic adjustment for negative, 400
automatic positive, 401
essential features of a, 399
for two beams, 405
Hempseeds, 393
Hollingworth and Knowles', automatic positive, 402, 406
linen loom, positive, 407
necessary conditions obtaining in Hollingworth and Knowles, 405
negative, 391
positive, 400
powerful, 395
Levelling the harness, 310
Lingoes, 313
Link connection to harness for double lift jacquard, 234
Linking machine, chain, description of, 50, 59
production of, 64
Loose reed, 491, 492, 501, 504
motion, unsuitable for heavy shuttles, 504
motions, 501, 505

Machine lift for jacquard, 271
data for, 273
points which influence the outline of, 271
Mails, 314
Marking motion, 55, 58, 87
Martingales, 514, 516
Measuring machine for warps, 50, 51
motion, 87
Mildew, 70, 74
Motor drives, 580

Movement of leaves, nature of, 126
Movement of needles, adjustment of, 232

Northrop automatic loom, 548
warp stop motion, 566

Objection to picking upwards, 320
to moving picking cone stud, 322
Overpick picking motion, 317

Path of crank, 114, 115, 125
Pick, alteration of strength of, 337
methods of obtaining a harder, 333
results of a harsh, 320
effect of travel of lay on, 336
Picker, raw hide, 320
Pick-at-will, overpick, 352
underpick, 343, 348
Picking, 315
earliest time for, 116
mechanism, types of, 317
time of, 378
Picking arm, adjustment, 317
average velocity of, 335
velocity of, 334
Picking motion, adjustment of bush for, 320
adjustment of picking bowl in underpick, 337
arc formed by stick in underpick, 340
character of action of underpick, 340
Hollingworth and Knowles' lever-pick or underpick, 341, 348, 481
horizontal lever pick, 341, 343
Picking motions, benefits and defects of underpick, 340
underpick, 337
Picking position, 116
Picking spindle, chord of arc for last period of acceleration of cone stud parallel to, 334
Picking wyper, adjustment of, 323, 332
construction of, 323, 329
in three parts, 322
Pinful or pin, 48, 54
Pirn machine, stop motion for, 35
winder, description of, 30
Pirns and cops, comparison of, 29
dimensions of, 36
Porter—sett and measure, 6
calculations for, 7
Position of yarn, leaves and cloth, relative, 111
Pressure harness, 264
Pressure harness and twilling jacquard, difference between, 277
defects of, 294, 295
Pressure harness, depth of heddle eyes in, 268
increase of pattern due to, 266
method of drawing warp in, 267
mounting of leaves, 270
saving of cards by use of, 266
weaving, benefits of, 268
binding of threads in, 269
depth of shuttles for, 271
hand-loom method of, 274
by other methods, 274
strain on yarn in, 270

Race, inclination of, 361, 372, 386
Reed and race, angle between, 386, 387
Reeds, crown or top, 107
hook, 103
leasing, 53, 101, 103
weaving, 104
Reed-marked cloth, 119, 122, 148
Reed method of gripping, 356
rigidity of, 376
uses of, 6
Reeding and methods of indicating, 109, 111
Reeling Yarn, methods of and reasons for, 6
Relation between shedding, picking and beating-up motions, 114
Restarting automatic looms, 562, 563
Reversing motion for box motion cylinders, 441, 472
for cylinder of dobby, 167, 175
for jacquard cylinders, 225, 256, 298

Rocking shaft, 356
change of position of, 371
connecting pin and crankshaft, relative positions of, 360
effect of connecting pin passing vertical plane of, 385
Rocking shafts, merits of fixed and adjustable, 360
Roll winders for warp yarns, 10
Rolls, capacity of, 10
spools or cheeses, advantages of, 10
Roller mountings, 152
for irregular weaves, 157
Rotation of crank in looms for jute weaving, 115
for linen weaving, 116

Sectional Beaming, 108
Selvage arrangements in jacquard weaving, 241
effect of position of crank on, 148
type of, in pick and pick weaving, 576
Selvages, centre and side, 567, 573
centre with two threads, 573
formed by extra jacquard hooks, 241, 576
Sett," as used in Ireland, 9
original for linen fabrics, 6
Shed, calculation for depth of, 141
Shedding, by tappet or wyper, 121
methods of, 117
motions, supplementary, 152
Shots (two) of weft in one shed, 575
Shrinkage in cloth, conditions affecting, 518
Shuttle and supports, coefficient of friction between, 326
average velocity of, 325
constant force for movement of, 326
dimensions of, 316
distance travelled by, 324
energy stored in a moving, 327
frictional and other resistances offered to moving, 326
guards, 526
time allowed for passage of, 377
time of travel of, 124, 272, 324
tip, 528
velocity of, 316, 325, 328
Shuttles, right and left handed, 511
Sizing mixtures and ingredients, 71
Speed, approximate, of looms, 124
of any loom, calculation to determine, 580
Speeds of looms, 578
no fixed rule for determining, 579
Splits per inch method of counting reeds, 9
Spool or roll winder, 10
Spools, rolls or cheeses, 10
Spring hammer for dobby cylinder, 173
under motions and over motions, 158
Starch mixing machines, 77
mixtures and ingredients, 71
Steam-heated cylinders for dressing machine, 103
Stop motion for double-lift jacquard, 234
order of cutting cards for, 236
Stopping automatic looms, 553, 554
Supplementary shedding motions, 152, 158
Swan-necks, 208, 212, 213, 223, 273
Swell in loose reed motion, 501
new type of, 455, 500
Swells, position of, 493
Swifts, 20, 26
Sword and crank, connections between, 359
in two parts, 241, 358
Swords, adjustment of, 358
wood, iron and steel, 359

Tailcords, attachment of hooks and couplings to, 312, 313
preparation of and varnishing, 311
Taking-up motions, 410
calculations for, 418, 419
constant number in, 419
continuous, 425
driven from wyper shaft, 421, 422

disadvantages of driving from wyper shaft, 423
effect of doubling constant number, 421, 429
effect of halving constant number, 421, 429
five wheel, 539
intermittent positive, 415
moving two teeth at a time in, 418, 421
negative, 411
negative with attempted automatic regulation, 414
positive, 414
seven wheel, 423, 424
three ways of finding change pinion in, 420
three wheel, 417
tooth and pick, 424
Table cloth, mounting for, 311
Tappet, considerations affecting form of, 122
driving, calculation for, 143
inside, 143
outside, 144, 147
Tappets, convenient change from plain to twill, 144
different lifts of, 136, 146, 152
negative, construction of, 127
positive construction of, 136
setting of, 148
Temple and uptake roller, combination of, 522
Temple, hand, 523
segmental ring, with details of, 523, 525
Temples and their advantages, 518, 521
chief reason for use of, 521
roller, 521, 526
use of, unnecessary for most jute and heavy linen fabrics, 522
Tongue, 494, 495, 496, 497, 498, 503, 505
Travel of shuttle, commencement of, 116
Turkish or Terry towel motions, 531, 532
Dickinson's, 535
Hacking's, 532
Lupton and Place's, 541
special parts for, 540
Twilling jacquards, 264, 277
cross twilling in, 296
defects of, 294
description of, 278
disadvantage of, 277
disc for, 291
driving of, 289
fileying of, 293
ground and figure weaves for, 295
method of painting designs for, 282
picks per card for, 289, 292
rotating twilling shaft in, 284
with different twills, 297

Underpick motion, 337
advantages and defects of, 340
pick-at-will, 343, 348
Uniform velocity of yarn during winding, 28

Variable speed of spindle in pirn winder, 32
velocity of yarn during winding, 30
Velocity of shuttle, 123
Verdol jacquard, 256
Vibrating back beam or rail, 399

Warping, 42
machine for linen, description of, 93
machine, velocity of yarn in, 98
mill, description and dimensions of, 43
operation of, on hand warping mill, 46
Warp protectors, 492, 498
threads, drawing in of, 109
winding, automatic stop mechanism for, 12, 17, 20
winding, on rolls, spools, or cheeses, 10
stop motion, 565
Weaving, 114
Weft cutter, 549
feeler, 549, 554

fork, 507
centre, 511
side, 508
grate, 518
timing of, 510
mixer, 554
winding, 28
automatic stop motion for, 35
Woodcroft tappet, centre-shed, 137
open-shed, 137
Wypers or tappets, calculation for throw of, 141
construction of, 127
in halves, 136, 146

Yarn calculations, 2

THE END

Printed by R. & R. Clark, Limited, *Edinburgh.*

BY THE SAME AUTHORS

Illustrated. Crown 8vo. 10/- net.

TEXTILE DESIGN

PURE AND APPLIED

TEXTILE MERCURY.—"This volume is an important addition to our textile literature, no book of so comprehensive a nature having previously appeared on the subject. . . . The subject of cloth structure is thoroughly dealt with, no important fabric has been neglected, and no section seems to have received more than its rational share. A feature of the book is the careful and methodical manner in which the matter has been arranged; and in previous works by the joint authors the same characteristic has been evident. They appear to have the knack of terse description, which is helped greatly by carefully prepared groupings and diagrams: no words are wasted, yet nothing essential is neglected. . . . All the structures are very well described, and the sections are perfect, giving in every case a clear idea of the fabric. The treatise is one which should be in the hands of students and manufacturers concerned with woven design, and the authors deserve the thanks of the trade for the labour and care—it must have been a labour of love—with which they have prepared the matter for so useful a book."

ATHENÆUM.—"One of those attractive volumes revealing the 'how and wherefore' of a craft. . . . The authors of this treatise are chiefly concerned with the technique of jute and linen weaving, though the whole subject is treated. The work deals rather with fact than theory, of which the authors as good craftsmen are silent; of technique and method they write with authority and clearness, adding full illustration of every point. These illustrations are admirable for their purpose, and suggest to the artist the vast possibilities of design employing only the simplest combinations of a single unit. To all interested in weaving and textile design the volume should be an invaluable guide, as well as an inexhaustible store of information carefully arranged and indexed."

TEXTILE MANUFACTURER.—"The work should be of great value to all who are concerned in the designing of textile fabrics. . . . The book is of such general excellence that we confidently recommend it to our readers as a valuable contribution to the increasingly important subject of design as applied to textile fabrics."

TEXTILE RECORDER.—"The present work is undoubtedly excellent in construction, and in it the weave of almost every type of textile fabric will be found illustrated and described. We do not know another book that treats the subject so completely, and are certain that it will be welcomed by students and practical men alike. We must compliment the authors on the well-arranged and executed illustrations which accompany the letterpress, especially those representing the appearance of thirty-six different silk fabrics. . . . The thorough nature of the book is most commendable. The chapter on warp pile fabrics is a clear exposition of this particular class of weave, and goes beyond anything we have hitherto come across. The last chapter, dealing with silk picture designs and fabrics, is also, we believe, new in books dealing with this subject. The authors have certainly every reason to be proud of what will, we think, remain a reliable text-book for many years."

COTTON.—"In this book they have illustrated and described in more or less detail almost every important type of textile fabric. It is a thoroughly comprehensive treatise on the subject of textile technical design and should be in the hands of every person interested in that section of the textile industry, whether he be a student or a designer."

TEXTILE INSTITUTE JOURNAL.—"From the point of view of weave structure this is probably the most comprehensive book in the English language. The subject-matter is clearly expressed, well printed, and the illustrations are on a lavish scale, upwards of 1400 different weaves, plans, intersections, and photographical reproductions being employed to explain the text, all of which are exceptionally good. The authors are to be congratulated upon the production of a book in which most of the subjects are so thoroughly dealt with. It cannot fail to be appreciated by students and others engaged in the various branches of the textile industry."

LONDON: MACMILLAN AND COMPANY, LTD.

By W. S. TAGGART, M.I.Mech.E.

COTTON SPINNING

In Three Volumes. Crown 8vo. With Illustrations.

Vol. I. Including all Processes up to the end of Carding. Fourth Edition. 4s. net.

Vol. II. Including the Processes up to the end of Fly Frames. Fifth Edition. 4s. net.

Vol. III. Including Theory of Spinning—Mechanism and Working of the Mule—The Ring Spinning Frame —Winding Frames—Doubling—Yarn Preparing —Mill Planning—Humidity—Useful Information — Appendix — Index. Third Edition. 10s. net.

COTTON MACHINERY SKETCHES

Super Royal 8vo. Sewed. 2s. 6d.

A Book of Sketches of all Types of Machinery of a modern Cotton Mill, with full details and diagrams.

COTTON SPINNING CALCULATIONS

Illustrated. Crown 8vo. 4s. net.

A Book of Cotton Mill Calculations illustrating all the Gearing of the Chief Types of Machinery and Worked Examples of all Rules necessary to a Spinning Mill.

LONDON: MACMILLAN AND CO., LTD.

By F. H. BOWMAN, D.Sc.

THE STRUCTURE OF THE COTTON FIBRE AND ITS RELATION TO TECHNICAL APPLICATIONS

Illustrated. Crown 8vo. 8s. 6d. net.

THE STRUCTURE OF THE WOOL FIBRE AND ITS RELATION TO THE USE OF WOOL FOR TECHNICAL PURPOSES

Illustrated. Crown 8vo. 8s. 6d. net.

By CHARLES VICKERMAN

WOOLLEN SPINNING

A TEXT-BOOK FOR STUDENTS IN TECHNICAL SCHOOLS AND COLLEGES, AND FOR SKILFUL PRACTICAL MEN IN WOOLLEN MILLS

Illustrated. Crown 8vo. 6s. net.

By THOMAS W. FOX, M.S.C.Tech.

THE MECHANISM OF WEAVING

Fourth Edition. Crown 8vo. 7s. 6d. net.

LONDON : MACMILLAN AND CO., LTD.

THIS BOOK IS DUE ON THE LAST DATE
STAMPED BELOW

AN INITIAL FINE OF 25 CENTS
WILL BE ASSESSED FOR FAILURE TO RETURN
THIS BOOK ON THE DATE DUE. THE PENALTY
WILL INCREASE TO 50 CENTS ON THE FOURTH
DAY AND TO $1.00 ON THE SEVENTH DAY
OVERDUE.

APR 24 1939
OCT 30 '40
MAR 4 1962

LIBRARY, BRANCH OF THE COLLEGE OF AGRICULTURE
5m-8,'34(s)

19231		TS1705
Woodhouse,	T.	W6
Jute and	linen weaving.	1914
~~HOME~~		v.1
ECONOMICS		
APR 24	1939	
Ja 30 '40		
MAR 4	1962	

TS1705
W6
1914
v.1
19231

LIBRARY, BRANCH OF THE COLLEGE OF AGRICULTURE, DAVIS
UNIVERSITY OF CALIFORNIA